AIRBUS
CUSTOMER SERVICES DIRECTORATE
1 Rond Point Maurice Bellonte
31707 BLAGNAC CEDEX FRANCE
Tel : (33) 5 61 93 33 33
Telex : AIRBU 530526F
Fax : (33) 5 61 93 42 51

MANDATORY MANDATORY MANDATORY MANDATORY

ATA SYSTEM : 57

TITLE : WINGS - MAIN LANDING GEAR ATTACHMENT - INTRODUCTION OF BUSHES WITH INCREASED INTERFERENCE FIT INTO AFT BEARING FORWARD LUG OF GEAR RIB 5

MODIFICATION No. : 13329H5686

This page transmits Revision No. 02 of Service Bulletin No. A310-57-2090

ADDITIONAL WORK

No additional work is required by this revision for aircraft modified by any previous issue.

REASON

This revision has been issued to change the Compliance from Recommended to Mandatory. The part number of the honing tool has been updated.

CHANGES

SUMMARY :

- REASON/DESCRIPTION/OPERATIONAL CONSEQUENCES

  . Evaluation Table, Compliance has been changed from Recommended to Mandatory and Potential AD has been changed from No to Yes.

- EFFECTIVITY

  . Effectivity has been updated.

PLANNING INFORMATION :

- EFFECTIVITY

  . 1.A. Aircraft model 310-221 has been added. Effectivity has been updated.

- COMPLIANCE

- Classification

  . 1.E.(1) Compliance has changed from Recommended to Mandatory.

Printed in France © AIRBUS 2008 All rights reserved

- Accomplishment Timescale

  . 1.E.(2) Standard sentence has been changed.

- APPROVAL

  . 1.F. Approval statement updated to the latest standard.

MATERIAL INFORMATION :

- MATERIAL - PRICE AND AVAILABILITY

- Material

  . 2.A.(1) AIRBUS address has been updated.

- TOOLING - PRICE AND AVAILABILITY

  . 2.F. Tool number updated.

- MODIFICATION

  . 3.B.(1)(b)4 Dimension identification changed.

  . 3.B.(1)(b)5 Dimension identification changed.

  . 3.B.(1)(b)6 Dimension identification changed.

  . 3.B.(1)(c)1 Dimension identifications changed.

  . 3.B.(1)(c)5 Dimension identification changed.

  . 3.B.(1)(c)9 Dimension identification changed.

- Figure 1

  . Dimension identifications changed. Item 33 becomes Item 34.

FILING INSTRUCTIONS

This Service Bulletin has been generated electronically and is reissued as a complete document. Replace the complete document.

Put this Revision Transmittal Sheet in front of the Service Bulletin.

HISTORY OF PREVIOUS REVISIONS

Revision 01 was issue to update the sales price information given in the Industry Support Information and correct the surface finish units. The opportunity was taken to make minor corrections and update the effectivity.

Printed in France © AIRBUS 2008 All rights reserved

REVISION SEQUENCE

ORIGINAL : May 22/07
REVISION No. : 01 - Dec 19/07
REVISION No. : 02 - Jun 18/10

Printed in France © AIRBUS 2008 All rights reserved

This Page Intentionally Left Blank

Printed in France © AIRBUS 2008 All rights reserved

AIRBUS
CUSTOMER SERVICES DIRECTORATE
1 Rond Point Maurice Bellonte
31707 BLAGNAC CEDEX FRANCE
Tel : (33) 5 61 93 33 33
Telex : AIRBU 530526F
Fax : (33) 5 61 93 42 51

This summary is for information only and is not approved for modification of the aircraft

MANDATORY MANDATORY MANDATORY MANDATORY

ATA SYSTEM : 57

TITLE : WINGS - MAIN LANDING GEAR ATTACHMENT - INTRODUCTION OF BUSHES WITH INCREASED INTERFERENCE FIT INTO AFT BEARING FORWARD LUG OF GEAR RIB 5

MODIFICATION No. : 13329H5686

REASON/DESCRIPTION/OPERATIONAL CONSEQUENCES

During routine maintenance, a crack has been found visually in main landing gear (MLG) rib 5 on two A310 in-service aircraft. The crack was found in the forward lug of the MLG rib 5 aft bearing attachment. The concerned aircraft had accumulated 24,000 flight cycles (FC) and 27,000 FC at the time of finding, refer to Operator Information Telex (OIT) 999.0115/06.

In both cases the cracks extended through the entire thickness of the forward lug. Inspection of the MLG rib 5 forward lug on the opposite wings was performed after removal of the bushes on the concerned aircraft. The inspection revealed medium to heavy corrosion in the forward lug holes. A laboratory examination of the two cracked ribs confirmed that the origin of the cracks was due to pitting corrosion.

This Service Bulletin introduces new bushes with an increased interference fit in the aft bearing forward lugs. The aft lug of the aft bearing attachment is not affected as the bush is already installed during production with an increased interference fit. After removal of the old bushes, a dye penetrant flaw detection inspection is carried out on the lug bores and faces before installation of the new bushes to make sure that the lugs are damage free.

If oversized interference fit bushes have already been installed in one or more of the forward lug positions of the MLG rib 5 aft bearing as per repair R57249121, the intent of this modification can be considered as embodied in these positions.

Accomplishment of this Service Bulletin will significantly reduce the likelihood of corrosion and any subsequent cracks in the forward lug of the MLG rib 5 aft bearing attachment.

Accomplishment of this Service Bulletin will cancel the inspection requirements of Service Bulletins A310-57A2088 and A310-57-2091.

The intent of this Service Bulletin has been validated on A310 aircraft MSN 0539 by the application of repair R57249121.

Printed in France © AIRBUS 2008 All rights reserved

EVALUATION TABLE			
COMPLIANCE	Mandatory	CANCELS INSPECTION SB	Yes
POTENTIAL AD	Yes	A/C OPERATION AFFECTED	No
RELIABILITY AFFECTED	No	PAX COMFORT AFFECTED	No
COST SAVING	No	ETOPS AFFECTED	No
STRUCTURAL LIFE EXTN	No	VENDOR SB INVOLVED	No
KIT PRICE (USD)B01R02	3960	NORMAL JACKING	Yes

MODIFICATION CLASSIFICATION	
MAJOR	None
MINOR	13329H5686

As per EASA IR 21, a minor change is one that has no appreciable effect on the mass, balance, structural strength, reliability, operational characteristics affecting the airworthiness of the product. All other changes are major changes.

EFFECTIVITY

This Service Bulletin is applicable to this (these) operator(s) :

19U 52X 58X 80V 82Z 83V 99Y AFG AIB AIC BAF BBC BLE CFC CSA DAH DEC DGA F2I FDX G8E GAF HFY I2L IRA IRM IYE JAB JAV K1P KAC KTC KYV KZU MGL MWA PIA QAF R1T RJA ROT RZO SBI SGX SUD THY TSC UZB WHT

This modification is applicable by Service Bulletin only.

CONCURRENT REQUIREMENTS

None

REFERENCES/REPERCUSSIONS

TFU : 57.51.11.004

Printed in France © AIRBUS 2008 All rights reserved

OEB : None

AOT : None

SIL : None

LIFE LIMIT : None

LINE MAINTENANCE AFFECTED : No

OTHERS : OIT SE 999.0115/06

NATURE OF THE WORK

AIRCRAFT : Yes

EQUIPMENT : No

HARD : No

SOFT : No

OBRM : No

MANPOWER

Config. 01

TOTAL MANHOURS	**41.50**
ELAPSED TIME (HOURS)	**22.00**

NOTE : If the Repair Instruction R57249121, "Removal of corrosion from the gear rib lugs and the installation of oversized bushes" is necessary, then approximately 52.0 manhours for each wing will be necessary for repair.

MATERIAL INFORMATION

AIRCRAFT DATA

2 x Kit 572090B01R02 will be necessary for accomplishment of this Service Bulletin on each aircraft. Kit 572090B01R02 comprises 1 bush A5724244120200 and 1 bush A5724244220200. 1 kit will be necessary for the LH Gear Rib 5 and 1 kit will be necessary for the RH Gear Rib 5.

A Tool Kit 044A411058D is necessary to accomplish this Service Bulletin. The Tool Kit includes tools for the removal/installation of the bushes and a line honing tool to finish the internal diameter of the bushes after installation.

NOTE : Tool Kit 044A411058D also includes the re-boring tool which is required to repair aft bearing attachment lugs in case they are found to be damaged.

Printed in France © AIRBUS 2008 All rights reserved

APPENDICES

None

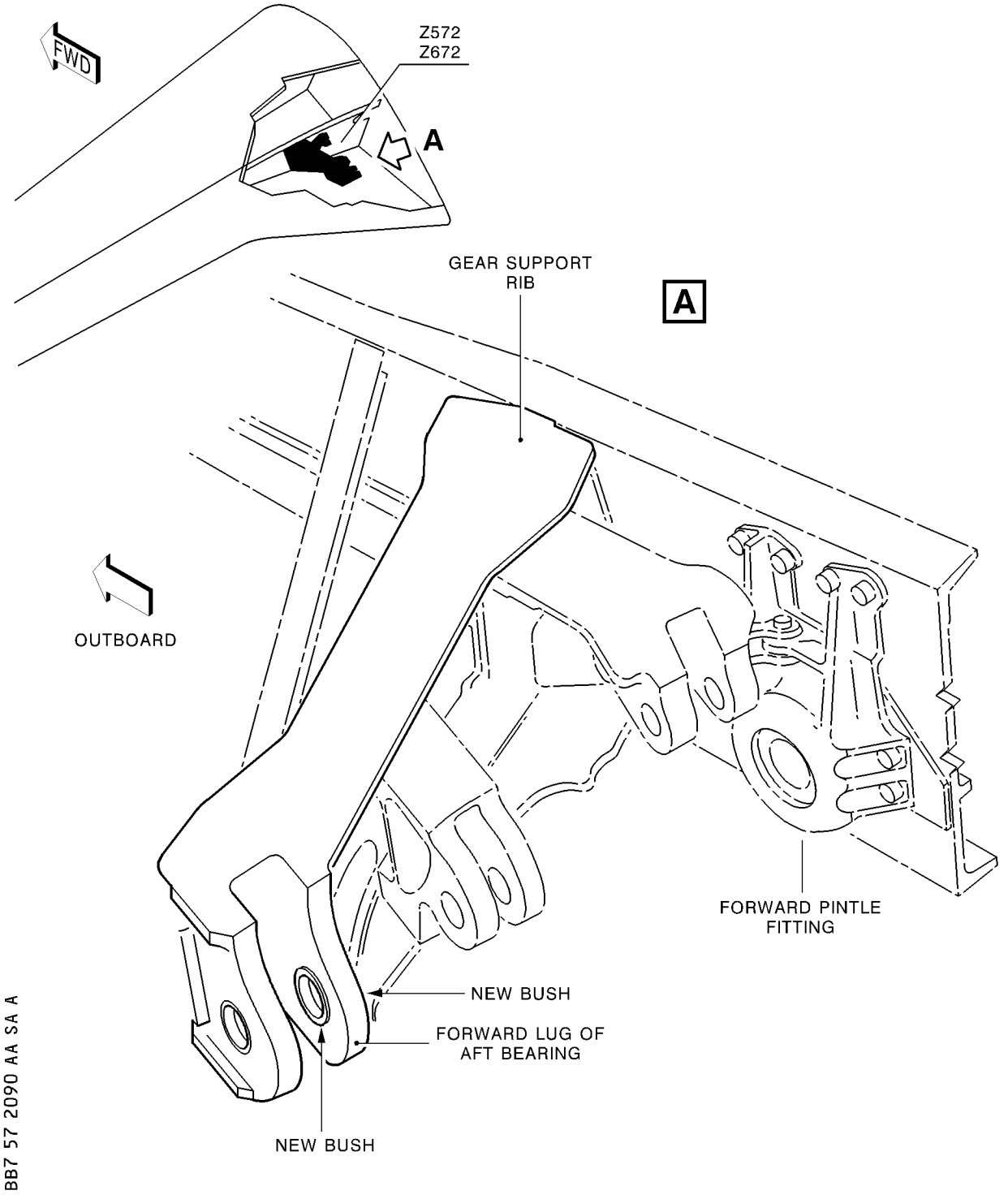

Printed in France © AIRBUS 2008 All rights reserved

AIRBUS
CUSTOMER SERVICES DIRECTORATE
1 Rond Point Maurice Bellonte
31707 BLAGNAC CEDEX FRANCE
Tel : (33) 5 61 93 33 33
Telex : AIRBU 530526F
Fax : (33) 5 61 93 42 51

MANDATORY MANDATORY MANDATORY MANDATORY

ATA SYSTEM : 57

TITLE : WINGS - MAIN LANDING GEAR ATTACHMENT - INTRODUCTION OF BUSHES WITH INCREASED INTERFERENCE FIT INTO AFT BEARING FORWARD LUG OF GEAR RIB 5

MODIFICATION No. : 13329H5686

This document contains AIRBUS PROPRIETARY INFORMATION and shall at all times remain the property of AIRBUS; no intellectual property right or licence is granted by AIRBUS in connection with any information contained in it. It is delivered on the express condition that said document and the information contained in it shall be treated as confidential, shall not be used for any purpose other than that for which it is hereby delivered. It shall not be disclosed in whole or in part to third parties and shall not be duplicated in any manner (except for the purposes of performing the tasks described hereunder and provided that any recipient of such document shall comply with the conditions herein), without AIRBUS' prior written consent.

1. PLANNING INFORMATION

A. EFFECTIVITY

(1) Models

310-203 310-204 310-221 310-222 310-304 310-308 310-322 310-324 310-325

(2) Aircraft

(a) Effectivity by MSN

This Service Bulletin is applicable to aircraft MSN :

0162 0191 0201 0217 0224 0230 0233 0237 0241 0245 0248 0251 0254 0257 0260 0264 0267 0273 0278 0281 0283 0288 0291 0293 0297 0303 0309 0313 0316 0318 0320 0326 0331 0333 0335 0338 0339 0342 0343 0345 0346 0353 0355-0357 0359 0360 0362 0364 0367 0369 0370 0372 0375 0378 0379 0386 0389 0390 0392 0394 0397 0399 0400 0406 0407 0410 0413 0416 0418 0419 0421 0422 0425 0427-0429 0431 0434 0436 0437 0439 0441 0444-0449 0452 0454 0456-0458 0467 0472 0473 0475 0476 0478 0480-0492 0494-0500 0502 0503 0519 0520 0522-0524 0526 0527 0531 0534 0537-0539 0541 0542 0544 0545 0547 0549-0552 0562 0564 0565 0567 0568 0571 0573 0574 0576 0585-0588 0590-0595 0597 0599 0600 0620 0622 0624 0636 0638 0640 0642 0644 0646-0654 0656 0658 0660 0661 0663 0665 0667

Printed in France © AIRBUS 2008 All rights reserved

0669 0671 0672 0674 0676 0678 0680 0682 0684 0686 0687 0689 0691 0693 0697 0700 0702 0704 0706

(b) Effectivity by Operator

The Operator/MSN relationship is provided for information only and is correct at the time of issue in accordance with the information available to AIRBUS. Any future changes resulting from transfer of an aircraft from one operator to another will not be reflected in this list unless the Service Bulletin is revised for another reason.

OPERATOR	MSN
19U	0399
52X	0410
58X	0431
80V	0538 0544
82Z	0550 0551
83V	0427
99Y	0489
AFG	0496 0497
AIB	0686
AIC	0392 0406 0407 0413 0428 0429 0654 0665 0669 0680
BAF	0367 0372
BBC	0594 0642 0700
BLE	0650
CFC	0425 0441 0444 0446 0482
CSA	0672 0674
DAH	0291 0293
DEC	0684 0693 0697
DGA	0418 0421 0422
F2I	0309 0487 0595

Printed in France © AIRBUS 2008 All rights reserved

OPERATOR	MSN
FDX	0162 0191 0201 0217 0224 0230 0233 0237 0241 0245 0248 0251 0254 0257 0260 0264 0267 0273 0278 0281 0283 0288 0297 0303 0313 0316 0318 0326 0331 0333 0335 0339 0342 0343 0345 0346 0353 0355 0356 0359 0360 0362 0364 0369 0378 0394 0397 0400 0439 0449 0452 0454 0456 0457 0458 0467 0492 0500 0534 0539 0542 0549 0552 0593 0638
G8E	0475
GAF	0434 0484 0498 0499 0503 0522 0523
HFY	0495 0565
I2L	0640
IRA	0338 0370 0375 0379 0389 0390 0436 0671
IRM	0488 0537 0564 0586
IYE	0568 0702 0704
JAB	0320 0419
JAV	0357 0481
K1P	0648
KAC	0647 0649 0663
KTC	0524 0567 0620
KYV	0386
KZU	0592 0622 0646
MGL	0526
MWA	0652
PIA	0473 0585 0587 0590 0653 0656 0660 0676 0678 0682 0687 0689 0691
QAF	0667
R1T	0591
RJA	0416 0445 0490 0491 0531
ROT	0636 0644
RZO	0571 0624 0651 0661

Printed in France © AIRBUS 2008 All rights reserved

OPERATOR	MSN
SBI	0486 0520
SGX	0519 0562
SUD	0437
THY	0476 0478 0480 0502
TSC	0447 0472 0483 0485 0527 0541 0545 0547 0588 0597 0599 0600 0658
UZB	0574 0576 0706
WHT	0448 0494 0573

This modification is applicable by Service Bulletin only.

(c) Effectivity by MSN and Kit/Configuration

The Kits and configurations applicable to these MSNs are given at the end of this list

0162 0191 0201 0217 0224 0230 0233 0237 0241 0245 0248 0251 0254 0257 0260 0264 0267 0273 0278 0281 0283 0288 0291 0293 0297 0303 0309 0313 0316 0318 0320 0326 0331 0333 0335 0338-0339 0342-0343 0345-0346 0353 0355-0357 0359-0360 0362 0364 0367 0369-0370 0372 0375 0378-0379 0386 0389-0390 0392 0394 0397 0399-0400 0406-0407 0410 0413 0416 0418-0419 0421-0422 0425 0427-0429 0431 0434 0436-0437 0439 0441 0444-0449 0452 0454 0456-0458 0467 0472-0473 0475-0476 0478 0480-0492 0494-0500 0502-0503 0519-0520 0522-0524 0526-0527 0531 0534 0537-0539 0541-0542 0544-0545 0547 0549-0552 0562 0564-0565 0567-0568 0571 0573-0574 0576 0585-0588 0590-0595 0597 0599-0600 0620 0622 0624 0636 0638 0640 0642 0644 0646-0654 0656 0658 0660-0661 0663 0665 0667 0669 0671-0672 0674 0676 0678 0680 0682 0684 0686-0687 0689 0691 0693 0697 0700 0702 0704 0706

KIT No.	QTY PER A/C	CONFIGURATION
572090B01	2	01

NOTE : Config. 01 is valid for all aircraft that have not had oversized interference fit bushes installed at aft bearing forward lug position by Repair Instruction R57249121. If oversized interference fit bushes have been installed at aft bearing forward lug position by Repair Instruction R57249121 on one wing only, then only 1 Kit 572090B01 will be necessary.

(3) Spares

None

Printed in France © AIRBUS 2008 All rights reserved

B. CONCURRENT REQUIREMENTS

None

C. REASON

(1) History

During routine maintenance, a crack has been found visually in MLG rib 5 on two A310 in-service aircraft. The crack was found in the forward lug of the MLG rib 5 aft bearing attachment lug. The concerned aircraft had accumulated 24,000 FC and 27,000 FC at the time of finding, refer to OIT 999.0115/06.

In both cases the cracks extended through the entire thickness of the forward lug. Inspection of the MLG rib 5 forward lug on the opposite wings was performed after removal of the bushes on the concerned aircraft. The inspection revealed medium to heavy corrosion in the forward lug holes. A laboratory examination of the two cracked ribs confirmed that the origin of the cracks was due to pitting corrosion.

The intent of this Service Bulletin has been validated on A310 aircraft MSN 0539 by the application of repair R57249121.

(2) Objective/Action

This Service Bulletin introduces new bushes with an increased interference fit in the aft bearing forward lugs. The aft lug of the aft bearing attachment is not affected as the bush is already installed during production with an increased interference fit. After removal of the old bushes, a dye penetrant flaw detection inspection is carried out on the lug bores and faces before installation of the new bushes to make sure that the lugs are damage free.

If oversized interference fit bushes have already been installed in one or more of the forward lug positions of the MLG rib 5 aft bearing as per repair R57249121, the intent of this modification can be considered as embodied in these positions.

(3) Advantages

Accomplishment of this Service Bulletin will significantly reduce the likelihood of corrosion and any subsequent cracks in the forward lug of the MLG rib 5 aft bearing attachment.

Accomplishment of this Service Bulletin will cancel the inspection requirements of Service Bulletins A310-57A2088 and A310-57-2091.

(4) Operational/Maintenance Consequences

None

D. DESCRIPTION

To accomplish this Service Bulletin it is necessary to :

(1) Config. 01

(a) Lift the aircraft on jacks.

Printed in France © AIRBUS 2008 All rights reserved

(b) Remove the LH and RH MLG legs.

(c) Remove the LH and RH MLG secondary doors.

(d) Remove the bushes from the forward lugs of the gear support rib 5 aft bearing attachment.

(e) Inspect the lug faces and bores for damage/corrosion.

NOTE : If damage/corrosion is found on a lug it will be necessary to report to AIRBUS for advice and to refer to repair drawing R57249121.

(f) Install the new bushes in the forward lugs of the gear support rib 5 aft bearing attachment.

NOTE : It is necessary to freeze fit the new bushes.

(g) Line-hone the new bushes to the finished internal diameter.

(h) Install the LH and RH MLG secondary doors.

(i) Install the LH and RH MLG legs.

(j) Do the applicable tests.

(k) Lower the aircraft off jacks.

(l) Close up and complete the documentation.

E. COMPLIANCE

(1) Classification

Mandatory

(2) Accomplishment Timescale

Accomplishment of this Service Bulletin has been rendered mandatory by the issue of an Airworthiness Directive (AD) published by the European Aviation Safety Agency (EASA). The AD must be used as the reference document for the mandatory accomplishment timescale.

F. APPROVAL

Approved under EASA Design Organisation Approval No. EASA.21J.031.

If an aircraft listed in the effectivity has a modification or repair embodied that is not of AIRBUS origin, and which affects the content of this Service Bulletin, the operator is responsible for obtaining approval by its airworthiness authority for any adaptation necessary before incorporation of the Service Bulletin.

Printed in France © AIRBUS 2008 All rights reserved

G. MANPOWER

The manpower estimates given in this Service Bulletin are based on the direct labor cost to do the work. These estimates assume that the work will be done by experienced personnel, and may need to be revised upwards to suit operator's circumstances. The estimates do not include the time to prepare, plan or inspect the work. Manufacture and procurement of parts and tools, drying times for paints, sealants, etc, and general administration work are also not included.

Config. 01

Remove LH MLG	5.00
Remove RH MLG	5.00
Remove the LH MLG secondary door	1.00
Remove the RH MLG secondary door	1.00
Remove LH Gear Rib 5 bushes	1.50
Remove RH Gear Rib 5 bushes	1.50
Inspect bores/faces of the LH lugs	1.00
Inspect bores/faces of the RH lugs	1.00
Install new LH Gear Rib 5 bushes	3.00
Install new RH Gear Rib 5 bushes	3.00
Install the LH MLG secondary door	1.00
Install the RH MLG secondary door	1.00
Install LH MLG	5.00
Install RH MLG	5.00

Printed in France © AIRBUS 2008 All rights reserved

Test	6.00
Close up	0.50
TOTAL MANHOURS	**41.50**
ELAPSED TIME (HOURS)	**22.00**

NOTE : If the Repair Instruction R57249121, "Removal of corrosion from the gear rib lugs and the installation of oversized bushes" is necessary, then approximately 52.0 manhours for each wing will be necessary for repair.

H. WEIGHT AND BALANCE

Not changed

I. ELECTRICAL LOAD DATA

Not changed

J. REFERENCES

Aircraft Maintenance Manual (AMM)	: 07-11-00 32-11-11 32-12-13
Elec. Std. Practices Manual (ESPM)	: 20-55-00
Non destructive Testing Manual (NTM)	: 51-90-00
Process and Mat. Spec. Manual (PMSM)	: 01-06-12
Structural Repair Manual (SRM)	: 51-21-10 51-76-10

K. PUBLICATIONS AFFECTED

None

L. INTERCHANGEABILITY/MIXABILITY

Not applicable

Printed in France © AIRBUS 2008 All rights reserved

2. MATERIAL INFORMATION

A. MATERIAL - PRICE AND AVAILABILITY

(1) Material

Customers with aircraft shown in the effectivity of this Service Bulletin should send a purchase order to AIRBUS. Quote the number of this Service Bulletin. The address is :

AIRBUS
Material, Logistics and Suppliers
Weg beim Jaeger 150
D-22335 HAMBURG
GERMANY

For ordering by internet: http://spares.airbus.com
For ordering by fax: +49 40 50 76 25 90

(2) Price and Availability

Kit 572090B01R02

Cost : 3960 US dollars

Availability : 90 calendar days from receipt of order

The Kit availability given above is the standard lead time from the date of your purchase order. If you require the Kit(s) before this time, please include a retrofit planning schedule with your order so that we can try to comply with your requirements.

The sales terms (costs and availability) are estimated in relation to economic conditions at the issue date of the Service Bulletin.

B. INDUSTRY SUPPORT INFORMATION

AIRBUS will provide a 50 percent reduction to the applicable sales prices given in paragraph 2A(2) for orders placed before 31 December 2013.

C. LIST OF COMPONENTS

Kit 572090B01R02

ITEM	NEW PART No.	QTY	UM	KEYWORD	ITEM	OLD PART No.	INT INST DISP
1	A5724244220200	1		Bush	(1)	A5724244220000	*
2	A5724244120200	1		Bush	(2)	A5724244120000	*

NOTE(*) Discard

D. LIST OF MATERIALS - OPERATOR SUPPLIED

(1) Consumable Materials

Printed in France © AIRBUS 2008 All rights reserved

DESCRIPTION	REFERENCE TO CML MAT No.	QTY PER A/C	INST/DISP
Honing Fluid	Mat. No. 06-010	As required	
Varnish	Mat. No. 07-018	As required	01
Sealant, Anaerobic	Mat. No. 08-003	As required	
Fuel Tank Sealant Polysulfide	Mat. No. 09-002	As required	
Adhesion Promoter For Polysulfide Sealant	Mat. No. 09-028	As required	
Solvent General Purpose	Mat. No. 11-026	As required	
Chemical Conversion Coating Yellow Aluminum	Mat. No. 13-002	As required	
Polyurethane Gloss Finish (Clear Basecoat)	Mat. No. 16-021B	As required	01
Marker Pen 8404	None	1	02

NOTE(01) Mat. No. 07-018 is an alternative lacquer to Mat. No. 16-021B when used to protect written part numbers.

NOTE(02) The Marker Pen 8404 can be procured from :

Edding (UK) Ltd.
Merlin Centre
Acrewood Way
St. Albans
Herts
England

(2) Components

None

E. PARTS TO BE RE-IDENTIFIED BY THE OPERATOR

ITEM	NEW PART No.	KEYWORD	ITEM	OLD PART No.	INT
	*	Gear Rib		A57242444000	02
	*	Gear Rib		A57242444001	02
	*	Gear Rib		A57242444004	02
	*	Gear Rib		A57242444005	02
	*	Gear Rib		A57242444008	02
	*	Gear Rib		A57242444009	02

NOTE : * Re-identify by marking the SB number "SB A310-57-2090" adjacent to the old part number.

F. TOOLING - PRICE AND AVAILABILITY

ITEM	PART NUMBER	QTY	DESCRIPTION
	044A411058D	1	Kit MLG Boring Fixture

Printed in France © AIRBUS 2008 All rights reserved

NOTE(01) The tool kit contains the following items for the removal of the bushes, Items (1) and (2) (Refer to Figure 1, Sheet 2):

- Qty 1 044A411058D-34 Split Location Ring
- Qty 1 044A411058D-35 Bolt
- Qty 1 044A411058D-43 Enerpac Cylinder
- Qty 1 044A411058D-44 Enerpac Hand Pump
- Qty 1 044A411058D-45 Enerpac Connector Hose
- Qty 1 044A411058D-46 Spherical Washer
- Qty 1 044A411058D-47 Location Block
- Qty 4 044A411058D-48 Bolt (for Item 47)
- Qty 1 044A411058D-49 Thrust Washer
- Qty 2 044A411058D-50 Nut
- Qty 1 044A411058D-51 Reaction Block (Aft Bush Item (1))
- Qty 1 044A411058D-86 Captive Washer
- Qty 1 044A411058D-87 Shoulder Screw (for item 86)
- Qty 1 044A411058D-89 Reaction Block (Fwd Bush Item (2))

NOTE(02) The tool kit contains the following items for the installation of the bushes, Items 1 and 2 (Refer to Figure 1, Sheet 3):

- Qty 1 044A411058D-35 Bolt
- Qty 1 044A411058D-39 Installation Block
- Qty 1 044A411058D-43 Enerpac Cylinder
- Qty 1 044A411058D-44 Enerpac Hand Pump
- Qty 1 044A411058D-45 Enerpac Connector Hose
- Qty 1 044A411058D-46 Spherical Washer
- Qty 2 044A411058D-50 Nut
- Qty 1 044A411058D-51 Reaction Block (Fwd Bush Item 2)
- Qty 1 044A411058D-86 Captive Washer
- Qty 1 044A411058D-87 Shoulder Screw (for Item 86)
- Qty 1 044A411058D-89 Reaction Block (Aft Bush Item 1)

NOTE(03) The tool kit will contain an In-Line Honing Tool PN MT58133-197 to line hone the bushes to the finished internal diameter after installation (Refer to Figure 2). It will also contain an Alignment Tool (truing sleeve) PN MT19048 to set up the In-Line Honing Tool.
Also included are additional tools required in case a repair is necessary.

G. SPECIAL TOOLS

None

Printed in France © AIRBUS 2008 All rights reserved

This Page Intentionally Left Blank

Printed in France © AIRBUS 2008 All rights reserved

3. ACCOMPLISHMENT INSTRUCTIONS

A. GENERAL

WARNING : MAKE SURE THAT YOU OBEY ALL THE WARNINGS AND ALL THE CAUTIONS INCLUDED IN THE REFERENCED PROCEDURES.

CAUTION : ALWAYS OBEY THE PRECAUTIONS THAT FOLLOW TO KEEP ELECTRICAL WIRING IN A SATISFACTORY CONDITION (ELECTRICALLY AND MECHANICALLY SERVICEABLE). WHEN YOU DO MAINTENANCE WORK, REPAIRS OR MODIFICATIONS, ALWAYS KEEP ELECTRICAL WIRING, COMPONENTS AND THE WORK AREA AS CLEAN AS POSSIBLE. TO DO THIS:

- PUT PROTECTION, SUCH AS PLASTIC SHEETING, CLOTHS, ETC; AS NECESSARY ON WIRING AND COMPONENTS.
- REGULARLY REMOVE ALL SHAVINGS, UNWANTED MATERIAL AND OTHER CONTAMINATION.

THESE PRECAUTIONS WILL DECREASE THE RISK OF CONTAMINATION AND DAMAGE TO THE ELECTRICAL WIRING INSTALLATION.

IN CASE OF CONTAMINATION REFER TO ESPM 20-55-00, CLEANING.

(1) Preparation

(a) Config. 01

1 Lift the aircraft on jacks (Refer to AMM 07-11-00, Page block 1).

2 Remove the LH and RH MLG legs (Refer to AMM 32-11-11, Page block 401).

3 Remove the LH and RH MLG secondary doors (Refer to AMM 32-12-13, Page block 401).

4 Put access platforms in position in Zones 730/740.

(2) Standard Practices

(a) Part marking with indelible ink (Refer to PMS 01-06-12 and Para. 2.D.).

(b) Application of protective treatments (Refer to SRM 51-21-10, Page block 1).

(c) Application of a bead sealant as a fillet (Refer to SRM 51-76-10, Page block 201).

B. MODIFICATION

NOTE : The worksteps that follow are applicable to the LH and RH wings.

(1) Config. 01

(a) Removal of Bushes
Refer to Figure 1, Sheet 1 and 2

Printed in France © AIRBUS 2008 All rights reserved

1 Use the removal/installation tool from the tool kit 044A411058D to remove these items :

1	Bush	A5724244220000	Item (1)	Discard
1	Bush	A5724244120000	Item (2)	Discard

(b) Inspection of Lug Faces and Bores
Refer to Figure 1, Sheet 1

1 Clean the bores of the lugs with a plastic spatula and Solvent General Purpose (Mat. No. 11-026).

2 Visually inspect the bore and the spotfaces of the lug to make sure there is no corrosion and/or damage.

NOTE : If corrosion and/or damage is found visually it is not necessary to do the next workstep (b)3.

3 Do a dye penetrant flaw detection test of the bore and the spotfaces of the lug to make sure there is no corrosion and/or damage (Refer to NTM 51-90-00, Page block 901).

4 Do a check to make sure that the diameter of the bore of the lug (dimension Y) is within the tolerance of 4.7791 to 4.7805 in. (121.389 to 121.425 mm).

5 If no damage and/or corrosion is found and dimension Y is within the tolerance do workstep (1) (c).

6 If there is damage and/or corrosion found, or if dimension Y is more than the given tolerance, report the findings to AIRBUS and wait for advice for repair R57249121 and re-boring tool 044A411058D.

(c) Installation of Bushes
Refer to Figure 1, Sheet 1 and 3 and Figure 2, Sheet 1 and 2

1 Before installing the bushes check that the dimension Z (Refer to Figure 1, Sheet 1) is likely to be achieved. This can be done by measuring the thickness of the lug and the thickness of the flange on the two bushes and adding them together. Dimension Z should be between 2.785 and 2.797 in (70.74 and 71.04 mm). If the dimension Z is outside the tolerance, contact AIRBUS.

2 Apply Chemical Conversion Coating Yellow Aluminum (Mat. No. 13-002) to the bore and the spotfaces of the lug.

3 Apply Sealant, Anaerobic (Mat. No. 08-003) to the bores of the lug and the mating surface for the seat of the bush flange.

WARNING : LIQUID NITROGEN IS DANGEROUS. OBEY THE MANUFACTURERS INSTRUCTIONS AND WEAR THE CORRECT PROTECTIVE CLOTHING WHEN YOU USE LIQUID NITROGEN.

CAUTION : DO NOT PUT MORE THAN ONE BUSH AT A TIME INTO THE LIQUID NITROGEN, USE CLEAN TONGS TO REMOVE THE BUSH FROM

Printed in France © AIRBUS 2008 All rights reserved

THE LIQUID NITROGEN AND TO INSTALL IT IN THE BORE OF THE LUG.

4 Install these items from Kit 572090B01R02 as follows:

1	Bush	A5724244220200	Item 1
1	Bush	A5724244120200	Item 2

- freeze each bush in sequence in liquid nitrogen for not less than three minutes,
- use the installation tool (refer to Figure 1 Sheet 3) to install each bush in sequence in the applicable end of the bore of the forward lug of the aft gear-rib bearing. Make sure that the bushes are fully installed,
- allow the bushes to return to ambient temperature.

5 Make sure that the dimension Z is within the tolerance of 2.785 to 2.797 in. (70.74 to 71.04 mm).

6 Make sure that the clearance dimension between the bushes, Item 1 and Item 2 is free of sealant.

7 Assemble the in-line honing tool as shown, refer to Figure 2, Sheet 1.

8 Use the alignment tool (truing sleeve) to set up the in-line honing tool as shown, refer to Figure 2, Sheet 2.

CAUTION : USE ONLY "DELAPENA" HONING FLUID (Mat. No. 06-010).

9 Use the in-line honing tool to finish the internal diameter (dimension X) of the bushes, Item 1 and Item 2, within the tolerance of 4.5275 to 4.5289 in. (114.999 to 115.034 mm) and to a surface finish of 32 micro inches (0.81 microns).

10 Use Solvent General Purpose (Mat. No. 11-026) and a cloth to clean the area.

11 Apply Adhesion Promoter For Polysulfide Sealant (Mat. No. 09-028) around the flanges of the bushes, Items 1 and 2.

12 Apply a continuous bead of sealant around the edges of the bushes, Item 1 and Item 2 to form a fillet seal, use Fuel Tank Sealant Polysulfide (Mat. No. 09-002).

13 Use Solvent General Purpose (Mat. No. 11-026) and a cloth to remove any unwanted sealant.

14 Apply Polyurethane Gloss Finish (Clear Basecoat) (Mat. No. 16-021B) to the fillet seals to protect the sealant from hydraulic fluid.

(d) Re-identify the gear ribs 5 by marking this SB No. adjacent to the part number, refer to Para. 2.E. and Para. 3.A.(2)(a). Apply Polyurethane Gloss Finish (Clear Basecoat) (Mat. No. 16-021B) to protect the written SB No. from hydraulic fluid.

Printed in France © AIRBUS 2008 All rights reserved

C. TEST

(1) Config. 01

(a) The test procedures necessary for the LH and RH MLG Leg and MLG secondary door are included in the reference for installation (Refer to Para. D.(1)(a) and (b)).

D. CLOSE UP

(1) Config. 01

(a) Install the LH and RH MLG secondary doors (Refer to AMM 32-12-13, Page block 401).

(b) Install the LH and RH MLG legs (Refer to AMM 32-11-11, Page block 401).

(c) Make sure that the work areas are clean and clear of tools and other items of equipment.

(d) Remove the access platforms from Zones 730/740.

(e) Lower the aircraft off jacks (Refer to AMM 07-11-00, Page block 1).

E. DOCUMENTATION

Write in the applicable aircraft records that you have done all the work given in the Service Bulletin.

Printed in France © AIRBUS 2008 All rights reserved

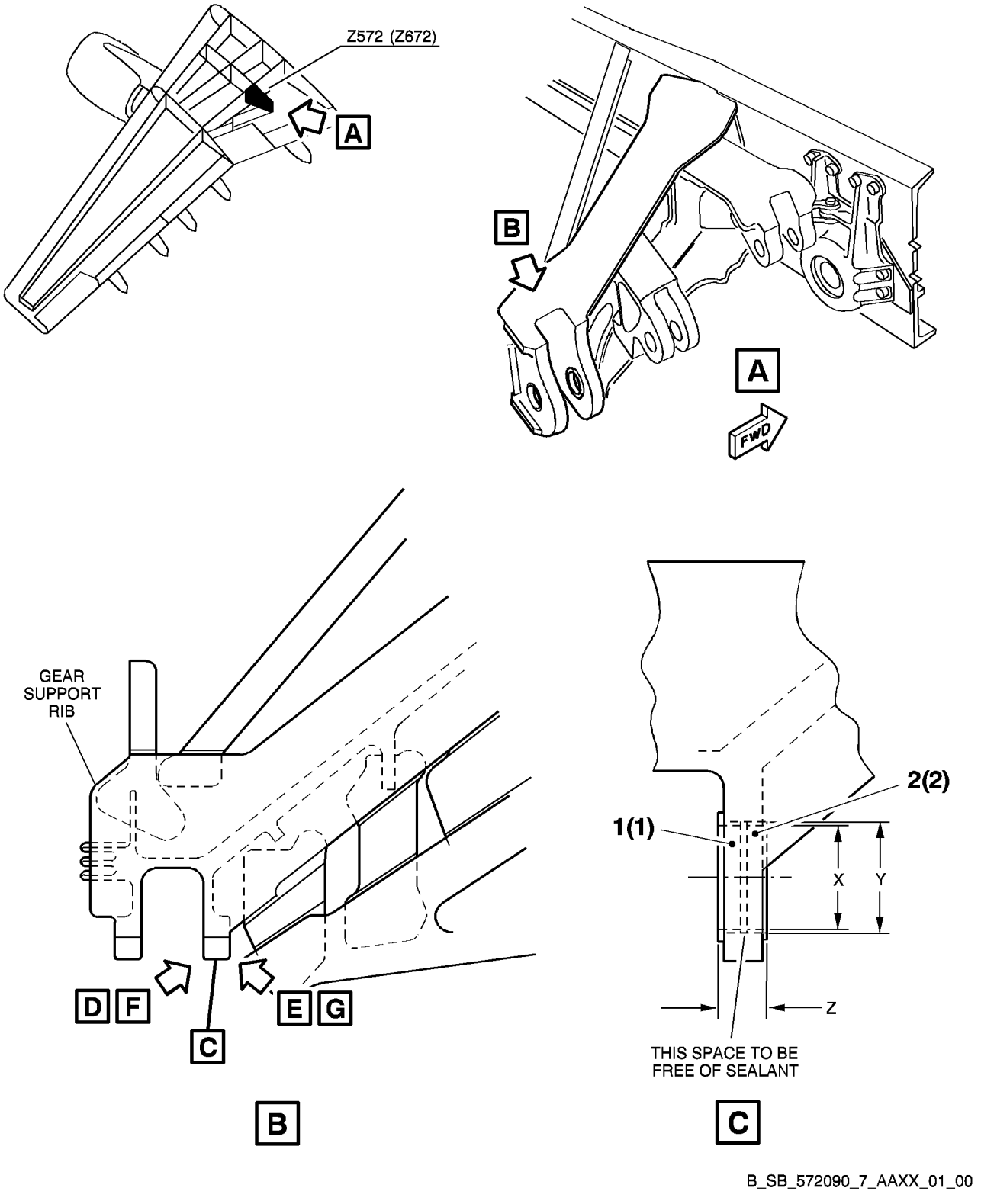

Figure 1, Sheet 1
Config. 01: Replacement of Gear Support Rib Bushes

Printed in France © AIRBUS 2008 All rights reserved

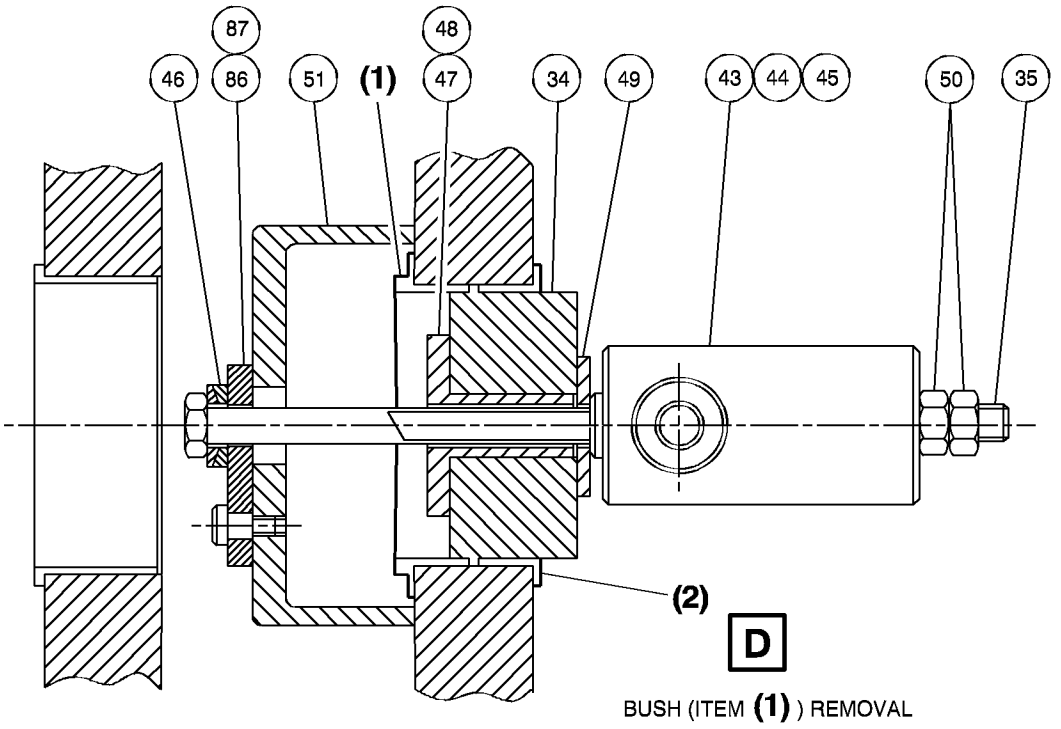

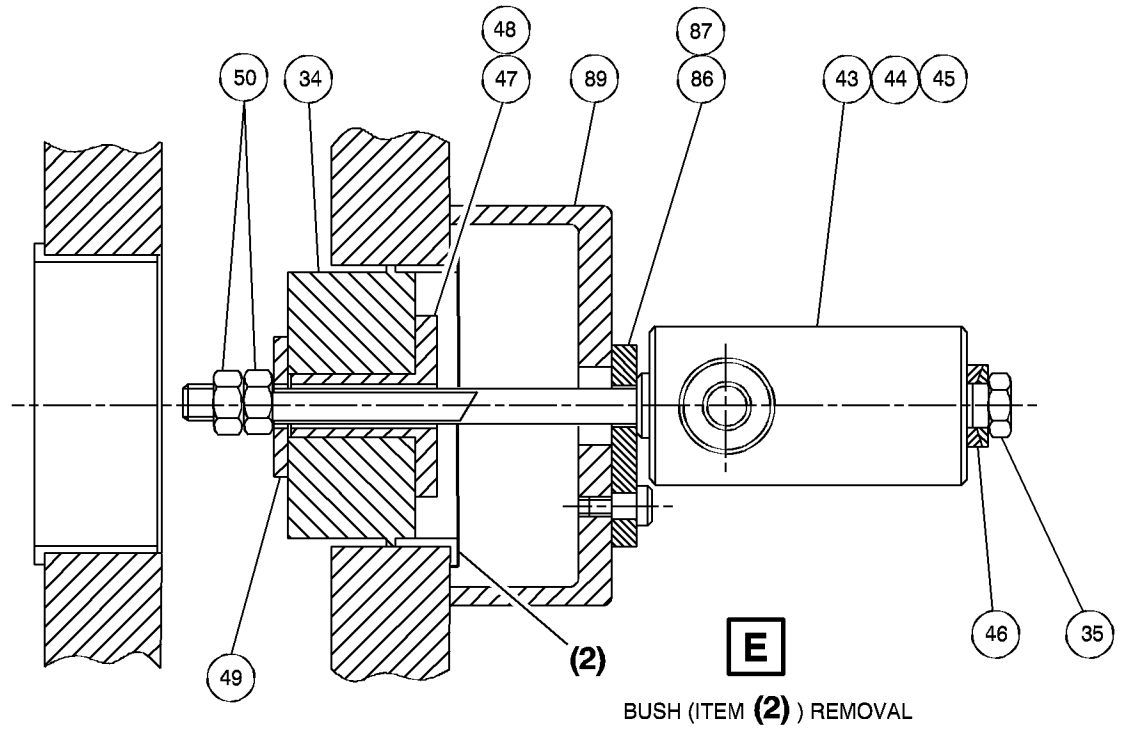

NOTE: ◯ TOOL KIT IDENTS.

B_SB_572090_7_AAXX_02_00

Figure 1, Sheet 2
Config. 01: Replacement of Gear Support Rib Bushes

Printed in France © AIRBUS 2008 All rights reserved

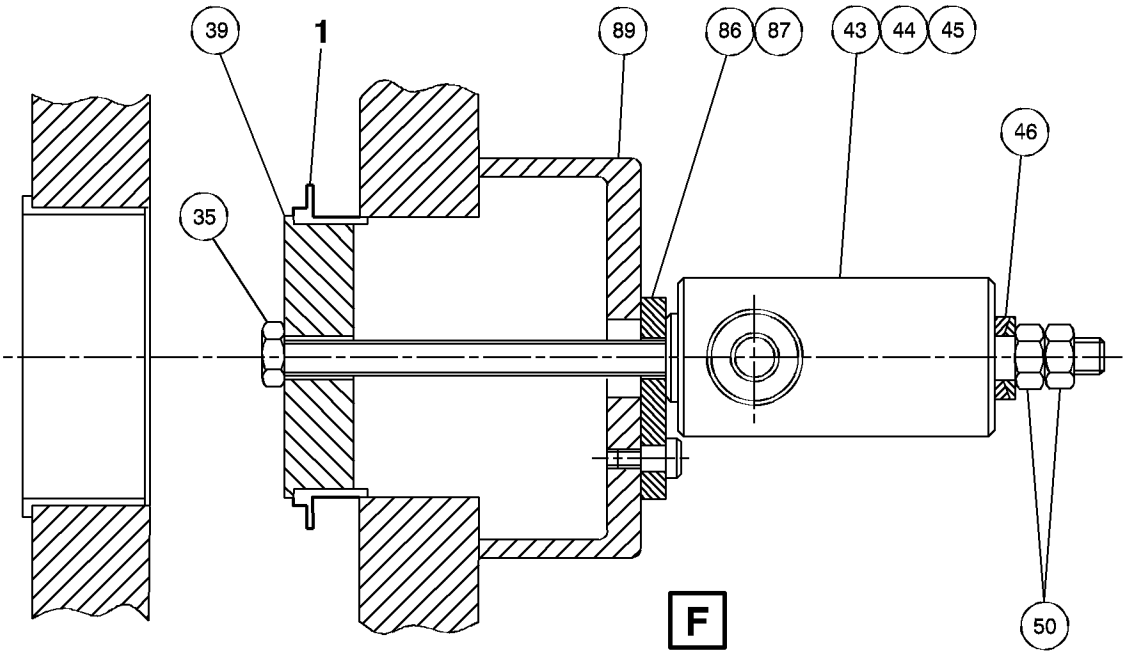

BUSH (ITEM 1) INSTALLATION

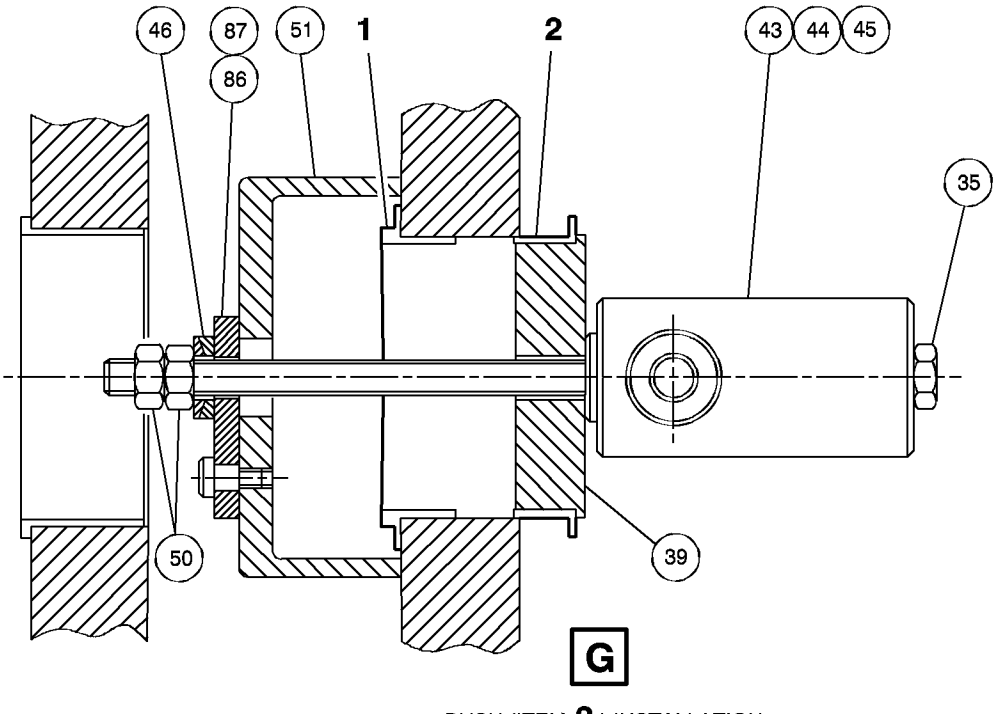

BUSH (ITEM 2) INSTALLATION

NOTE: ◯ TOOL KIT IDENTS.

B_SB_572090_7_AAXX_03_00

Figure 1, Sheet 3
Config. 01: Replacement of Gear Support Rib Bushes

Printed in France © AIRBUS 2008 All rights reserved

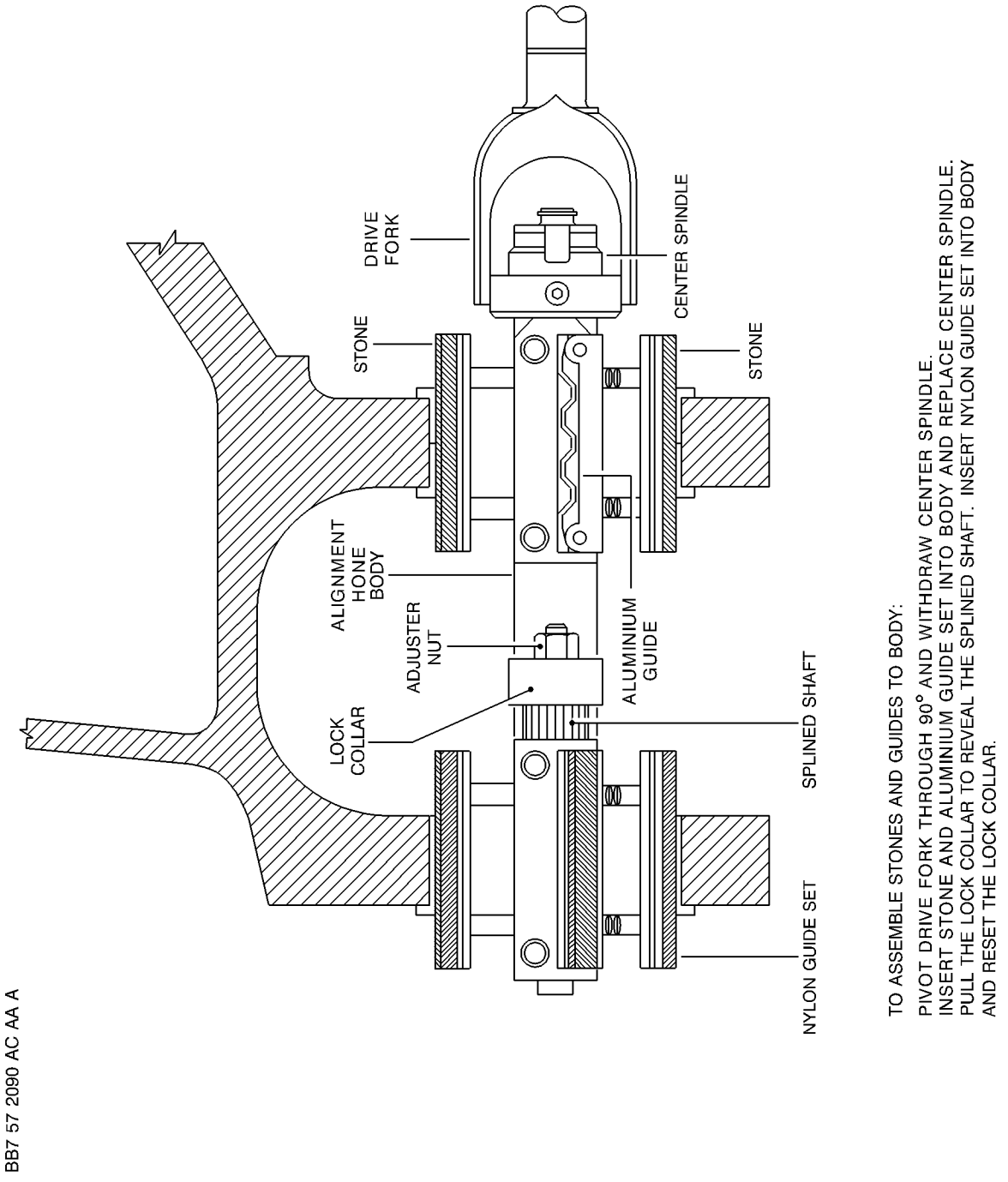

Figure 2, Sheet 1
Config. 01: Line Honing of Bushes

Printed in France © AIRBUS 2008 All rights reserved

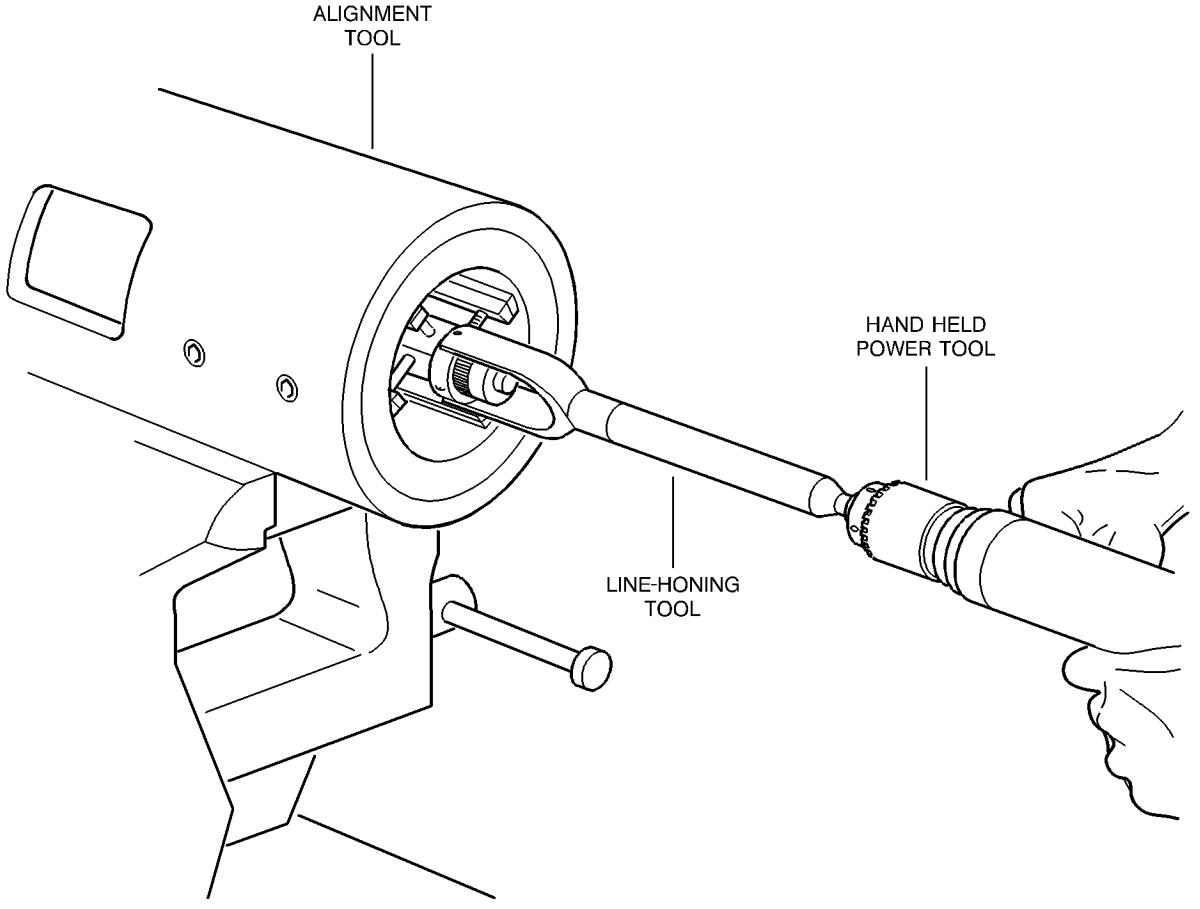

BB7 57 2090 AC AB A

NOTE:
USE OF ALIGNMENT TOOL TO ALIGN FACES OF THE TWO STONES OF THE LINE-HONING TOOL.

Figure 2, Sheet 2
Config. 01: Line Honing of Bushes

Printed in France © AIRBUS 2008 All rights reserved

This Page Intentionally Left Blank

Printed in France © AIRBUS 2008 All rights reserved

A310

SERVICE BULLETIN
REPORTING SHEET

TITLE : WINGS - MAIN LANDING GEAR ATTACHMENT - INTRODUCTION OF BUSHES WITH INCREASED INTERFERENCE FIT INTO AFT BEARING FORWARD LUG OF GEAR RIB 5

MODIFICATION No. : 13329H5686

Please complete the appropriate item (A or B):

A - SB WILL BE embodied ..... YES/NO (if NO please comment)
If YES, aircraft concerned (as per SB effectivity by default) and planned dates (month/year) of embodiement:
.....
.....

B - SB HAS BEEN embodied on aircraft: .....
.....
.....

Operator comments:.....
.....
.....

From Airline: .....
Name/Title: .....
Signature:..... Date: .....

If operational documentation is affected (see Paragraph 1.K of this SB): If information is needed prior to next normal revision or prior to SB embodiment, please indicate required service(s):
Either : Advance data..... YES/NO
Or : Intermediate/Temporary revision ..... YES/NO

Important Information: This SB will only be incorporated in your maintenance and operational documentation if this sheet is returned to Airbus and signed by a duly authorised representative. With the next feasible revision, this will result in

- updating of maintenance documentation to show pre and post SB data.
- updating of maintenance and operational documentation to show post SB data after embodiment.

If this SB requires previous or simultaneous accomplishment of other SBs, Airbus shall automatically include them in the manual revisions. Refer to SIL 00-037 for detailed information.

Please return this completed sheet to:

AIRBUS
CUSTOMER SERVICES DIRECTORATE
1 Rond Point Maurice Bellonte
31707 BLAGNAC CEDEX FRANCE

Attn: SEDCC1 Technical Data and Documentation Services
FAX: (+33) 5 61 93 28 06
e-mail: sb.reporting@airbus.com
Or via your Resident Customer Support Office.

Alternatively, SB lists via letters or fax are also accepted.

Printed in France © AIRBUS 2008 All rights reserved

TITLE : WINGS - MAIN LANDING GEAR ATTACHMENT - INTRODUCTION OF BUSHES WITH INCREASED INTERFERENCE FIT INTO AFT BEARING FORWARD LUG OF GEAR RIB 5

MODIFICATION No. : 13329H5686

Use this form to tell us what is your perception of the quality of this Service Bulletin.The reported data that you provide us will be used to analyse areas of difficulties and to take corrective action to futher improve the quality of our Service Bulletins.
We thank you for the time you have taken in completing this form.

(Please rate on a scale of 1 to 4, with 4 being the highest score)

-Quality rating of this SB	4 3 2 1
-Quality rating of the Accomplishment Instructions	4 3 2 1
-Quality rating of the Illustrations	4 3 2 1
-Is this SB easy to understand ?	Y / N

If you have had difficulties in the accomplishment of this SB please quote below the area(s) and give a short description of the issue.

Planning	Material	Instructions
X Effectivity	X Kit Content	X Preparation
X Reason	X List of Materials	X Mod/Inspection
X Manpower	Operator Supplied	X Test
X References	X Re-identification	X Close-up
X Publication	X Tooling	X Illustrations

Comments :

Operator : Date:

Name/Title :

Please return this form to:

AIRBUS
CUSTOMER SERVICES DIRECTORATE
1 Rond Point Maurice Bellonte
31707 BLAGNAC CEDEX FRANCE

Attn: SEMB Service Bulletins Management
FAX: (+33) 5 61 93 42 51
Or via your Resident Customer Support Office.

Printed in France © AIRBUS 2008 All rights reserved