SERVICE BULLETIN
REVISION TRANSMITTAL SHEET

AIRBUS
CUSTOMER SERVICES DIRECTORATE
1 Rond Point Maurice Bellonte
31707 BLAGNAC CEDEX
FRANCE
Tel : (33) 5 61 93 33 33
Telex : AIRBU 530526F
Fax : (33) 5 61 93 42 51

MANDATORY MANDATORY MANDATORY

ATA SYSTEM: 28

TITLE: FUEL - INDICATING - INTRODUCE COMMON FUEL LEVEL SENSOR SUPPORT BRACKET

MODIFICATION No.: 158133J4169

NOTE: This modification is related to an airworthiness issue which has been re-classified and confirmed by EASA as minor in accordance with EU Part 21.A.91. As such, this is handled by AIRBUS under its Design Organisation Approval No. EASA.21J.031.

This page transmits Revision No.01 of Service Bulletin No.A320-28-1239

ADDITIONAL WORK

****CONF ALL**

No additional work is required by this revision for aircraft modified by any previous issue.

REASON

Revision No. 01 issued to:

- Update the effectivity
- Update the commercial policy
- Update KITB01 and KITB02 to give the correct left hand (LH) and right hand (RH) Bracket Assy-Support part numbers
- Correct the old and new Bracket Assy-Support part number associations for both LH and RH parts
- Remove the Job Set-up and Close-up work steps relating to the transfer of fuel from/to the surge tanks.

CHANGES

The main changes of this revision are:

- Aircraft added to the effectivity paragraph
- Effectivity by Operator updated

Printed in FRANCE © AIRBUS S.A.S. 2007. All rights reserved.

- Paragraph 1.L. INTERCHANGEABILITY/MIXABILITY updated
- Commercial policy updated
- KITB01 updated to give correct LH Bracket Assy-Support part number
- KITB02 updated to give correct RH Bracket Assy-Support part number
- Job Set-up and Close-up updated to remove work steps relating to the transfer of fuel from/to the surge tanks
- Service Bulletin Information Transmission (SBIT) 16-0081 added to the REFERENCES / REPERCUSSIONS table.

SUMMARY		
REASON/DESCRIPTION/OPERATIONAL CONSEQUENCES	REASON UPDATED	R
MATERIAL PRICE INFORMATION	MATERIAL PRICE INFORMATION TABLE UPDATED	R
EFFECTIVITY	OPERATOR LIST UPDATED	R
REFERENCES / REPERCUSSIONS	REFERENCES/REPERCUSSIONS TABLE UPDATED	R
PLANNING INFORMATION		
EFFECTIVITY	EFFECTIVITY RELATED INFORMATION UPDATED	R
Configuration definition		
CONF 001	CONFIGURATION DEFINITION UPDATED	R
Material Effectivity	MATERIAL EFFECTIVITY UPDATED MATERIAL SET UPDATED	R
REASON		
Advantages	ADVANTAGES UPDATED	R
REFERENCES	REFERENCED DOCUMENTATION UPDATED	R
INTERCHANGEABILITY/MIXABILITY	INTERCHANGEABILITY/MIXABILITY UPDATED	R
MATERIAL INFORMATION		
MATERIAL - PRICE AND AVAILABILITY		
Procurement Addresses	PROCUREMENT ADDRESSES UPDATED MATERIAL SET UPDATED	R
Price and Availability	PRICE AND AVAILABILITY UPDATED MATERIAL AVAILABILITY UPDATED MATERIAL SET UPDATED MATERIAL PRICE UPDATED	R
LIST OF COMPONENTS		
Kit 281239B01R02	PART MATERIAL SET UPDATED MATERIAL SET LABEL UPDATED PART NUMBER UPDATED	R
Kit 281239B02R02	PART MATERIAL SET UPDATED MATERIAL SET LABEL UPDATED PART NUMBER UPDATED	R

Printed in FRANCE © AIRBUS S.A.S. 2007. All rights reserved.

ACCOMPLISHMENT INSTRUCTIONS		
TASK 281239- 831-895-001-Modification	TASK SOLUTION UPDATED NOTE UPDATED CAUTION UPDATED	R
Subtask 281239-941-401-001	SUBTASK SOLUTION UPDATED REFERENCED DOCUMENTATION UPDATED	R
Subtask 281239-960-401-001	SUBTASK SOLUTION UPDATED PART NUMBER UPDATED PART NUMBER DESCRIPTION UPDATED MATERIAL LIST UPDATED	R
Subtask 281239-960-402-001	SUBTASK SOLUTION UPDATED PART NUMBER UPDATED PART NUMBER DESCRIPTION UPDATED MATERIAL LIST UPDATED	R
Subtask 281239-942-401-001	SUBTASK SOLUTION UPDATED REFERENCED DOCUMENTATION UPDATED PANEL UPDATED REFERENCES UPDATED	R

FILING INSTRUCTIONS

This Service Bulletin has been generated electronically and is reissued as a complete document. Replace the complete document.

Put this Revision Transmittal Sheet in front of the Service Bulletin.

HISTORY OF PREVIOUS REVISIONS

No previous revision

REVISION SEQUENCE

ORIGINAL: Nov 22/16

REVISION No. : 01 - Sep 15/17

Printed in FRANCE © AIRBUS S.A.S. 2007. All rights reserved.

This Page Intentionally Left Blank

Printed in FRANCE © AIRBUS S.A.S. 2007. All rights reserved.

SERVICE BULLETIN
SUMMARY

AIRBUS
CUSTOMER SERVICES DIRECTORATE
1 Rond Point Maurice Bellonte
31707 BLAGNAC CEDEX
FRANCE
Tel : (33) 5 61 93 33 33
Telex : AIRBU 530526F
Fax : (33) 5 61 93 42 51

This summary is for information only and is not approved for modification of the aircraft.

MANDATORY MANDATORY MANDATORY

ATA SYSTEM: 28

TITLE: FUEL - INDICATING - INTRODUCE COMMON FUEL LEVEL SENSOR SUPPORT BRACKET

****CONF ALL**

MODIFICATIONS

MODIFICATION CLASSIFICATION					
MAJOR	None				
MINOR	158133J4169				

NOTE: As per EASA IR 21, a minor change is one that has no appreciable effect on the mass, balance, structural strength, reliability, operational characteristics affecting the airworthiness of the product. All other changes are major changes.

NOTE: This modification is related to an airworthiness issue which has been re-classified and confirmed by EASA as minor in accordance with EU Part 21.A.91. As such, this is handled by AIRBUS under its Design Organisation Approval No. EASA.21J.031.

REASON/DESCRIPTION/OPERATIONAL CONSEQUENCES

Embodiment of production modification No. 160001J3282 has resulted in insufficient clearance between the fuel sensor cover mounted on Rib 24 and the crown of stringer (STGR) 15 on both the left hand (LH) and right hand (RH) wings.

This Service Bulletin introduces Modification Number (Mod No.) 158133J4169 which replaces the existing fuel sensor support brackets with new, offset fuel sensor support brackets as are currently installed on the A321 variant.

Accomplishment of this Service Bulletin will ensure that there is sufficient clearance between the fuel sensor cover and the crown of STGR 15.

GENERAL EVALUATION

EVALUATION TABLE			
COMPLIANCE	MANDATORY (1)	CANCELS INSPECTION SB	NO
POTENTIAL AD	YES	A/C OPERATION AFFECTED	NO
RELIABILITY AFFECTED	NO	PAX COMFORT AFFECTED	NO

Printed in FRANCE © AIRBUS S.A.S. 2007. All rights reserved.

SERVICE BULLETIN
SUMMARY

EVALUATION TABLE			
COST SAVING	NO	ETOPS AFFECTED	NO
STRUCTURAL LIFE EXTN	NO	VENDOR SB INVOLVED	NO
DE-FUELLING/VENTILATION	YES		

NOTE (1): Service Bulletin must be accomplished.

MATERIAL PRICE INFORMATION

MATERIAL PRICE INFORMATION TABLE			
MATERIAL SET	**QTY PER A/C**	**PRICE PER A/C (USD)**	**MAIN PARTS**
Kit 281239B01R02	1	270.00	Support bracket assy LH
Kit 281239B02R02	1	270.00	Support bracket assy RH
TOTAL		**540.00**	

EFFECTIVITY

This Service Bulletin is applicable to this (these) operator(s) :

AIB AXM CSN DLH FFT GOW IGO KZR LAN NKS PGT QTR TAM VIV VOI

CONCURRENT REQUIREMENTS

None

REFERENCES / REPERCUSSIONS

TFU	None
OEB	None
AOT	None
SIL	None
ISI	None
LINE MAINTENANCE AFFECTED	No
LIFE LIMIT	None
OTHER	Service Bulletin Information Transmission (SBIT) 16-0081

NATURE OF THE WORK

AIRCRAFT	YES
EQUIPMENT	NO
HARD	NO
SOFT	NO
OBRM	NO

MANPOWER

Task 281239-831-895-001: Modification	
TOTAL MANHOURS	7.00
ELAPSED TIME (HOURS)	4.00

Printed in FRANCE © AIRBUS S.A.S. 2007. All rights reserved.

APPENDICES

Appendix 01 - Manpower Gantt Chart

Printed in FRANCE © AIRBUS S.A.S. 2007. All rights reserved.

**CONF ALL

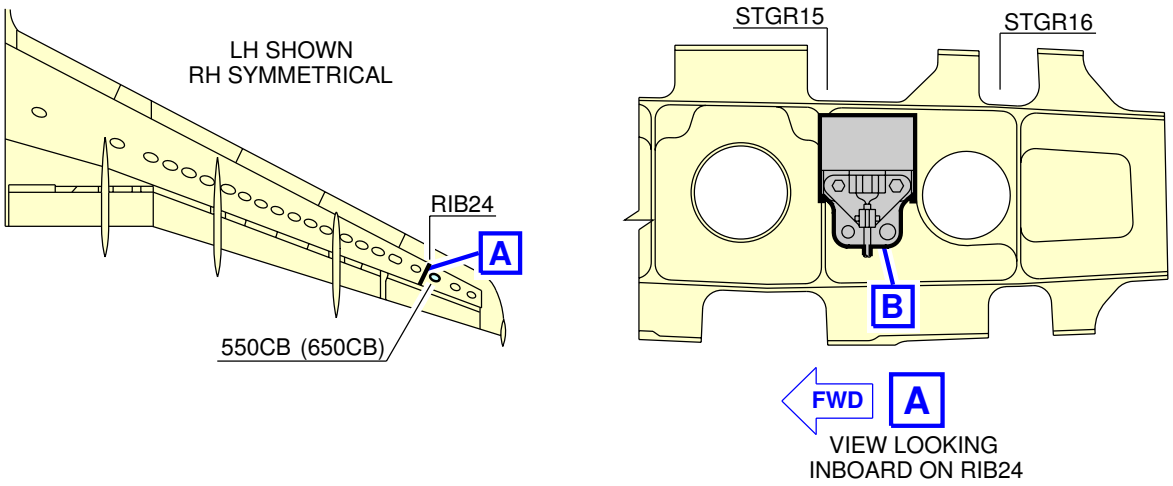

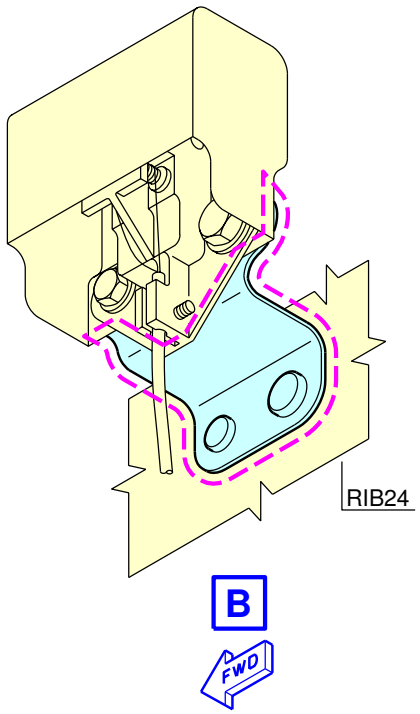

NOTE:

AREA OF MODIFICATION

N_SB_281239_7_SAAA_01_00

Figure A-USAAA - Sheet 01

Printed in FRANCE © AIRBUS S.A.S. 2007. All rights reserved.

AIRBUS
CUSTOMER SERVICES DIRECTORATE
1 Rond Point Maurice Bellonte
31707 BLAGNAC CEDEX
FRANCE
Tel : (33) 5 61 93 33 33
Telex : AIRBU 530526F
Fax : (33) 5 61 93 42 51

MANDATORY MANDATORY MANDATORY

ATA SYSTEM: 28

TITLE: FUEL - INDICATING - INTRODUCE COMMON FUEL LEVEL SENSOR SUPPORT BRACKET

MODIFICATION No.: 158133J4169

NOTE: This modification is related to an airworthiness issue which has been re-classified and confirmed by EASA as minor in accordance with EU Part 21.A.91. As such, this is handled by AIRBUS under its Design Organisation Approval No. EASA.21J.031.

This document contains AIRBUS PROPRIETARY INFORMATION and shall at all times remain the property of AIRBUS; no intellectual property right or licence is granted by AIRBUS in connection with any information contained in it. It is delivered on the express condition that said document and the information contained in it shall be treated as confidential, shall not be used for any purpose other than that for which it is hereby delivered. It shall not be disclosed in whole or in part to third parties and shall not be duplicated in any manner (except for the purposes of performing the tasks described hereunder and provided that any recipient of such document shall comply with the conditions herein), without AIRBUS prior written consent.

1. PLANNING INFORMATION

****CONF ALL**

A. EFFECTIVITY

NOTE: This modification is embodied before delivery on aircraft with Manufacturer Serial Number (MSN) 6642, 7129, 7175-7181, 7186-7209, 7249 and subsequent.

(1) Models

320-251N 320-271N

(2) Effectivity by MSN

6101 6286 6620 6720 6744 6772 6799 6801 6819 6829 6833 6849 6860 6864 6868 6904 6907 6914 6920 6946 6952 6967 6975 7001 7011 7033 7047 7051 7053 7060 7074 7078 7083 7094 7102-7103 7107 7124 7126 7140-7141 7147 7150 7162 7172 7185 7236

Printed in FRANCE © AIRBUS S.A.S. 2007. All rights reserved.

(3) Effectivity by Operator

The Operator/MSN relationship is provided for information only and is correct at the time of issue in accordance with the information available to AIRBUS. Any future changes resulting from transfer of an aircraft from one operator to another will not be reflected in this list unless the Service Bulletin is revised for another reason.

OPERATOR	MSN
AIB	6101 6620
AXM	7150 7236
CSN	6975
DLH	6801 6864 6920 7078 7103
FFT	7141
GOW	7047 7074 7172
IGO	6720 6744 6772 6799 6819 6829 6849 6860 6868 6904 6914 6946 6952 6967 7001 7033 7053
KZR	7124
LAN	6286
NKS	6833 6907 7011 7094
PGT	7140 7147 7162 7185
QTR	7083
TAM	7126
VIV	7060 7107
VOI	7051 7102

(4) Configuration by MSN

MSN	CONFIGURATION
6101 6286 6620 6720 6744 6772 6799 6801 6819 6829 6833 6849 6860 6864 6868 6904 6907 6914 6920 6946 6952 6967 6975 7001 7011 7033 7047 7051 7053 7060 7074 7078 7083 7094 7102 7103 7107 7124 7126 7140 7141 7147 7150 7162 7172 7185 7236	001

(5) Configuration definition

**CONF 001
Config. 001 is valid for all the aircraft given in the effectivity of this Service Bulletin as a standard configuration.

(6) Material Effectivity

MATERIAL	QTY PER A/C	SEE NOTES
Kit 281239B01R02	1	
Kit 281239B02R02	1	
Consumable CMLB01	1	

B. CONCURRENT REQUIREMENTS

None

Printed in FRANCE © AIRBUS S.A.S. 2007. All rights reserved.

C. REASON

(1) History

Embodiment of production modification No. 160001J3282 has resulted in insufficient clearance between the fuel sensor cover mounted on Rib 24 and the crown of stringer (STGR) 15 on both the left hand (LH) and right hand (RH) wings.

(2) Objective/Action

This Service Bulletin introduces Modification Number (Mod No.) 158133J4169 which replaces the existing fuel sensor support brackets with new, offset fuel sensor support brackets as are currently installed on the A321 variant.

(3) Advantages

Accomplishment of this Service Bulletin will ensure that there is sufficient clearance between the fuel sensor cover and the crown of STGR 15.

(4) Operational/Maintenance Consequences

None

D. DESCRIPTION

To accomplish this Service Bulletin it is necessary to :

Task 281239-831-895-001: Modification

(1) Replace the LH Fuel Level Sensor Support Bracket

(2) Replace the RH Fuel Level Sensor Support Bracket

E. COMPLIANCE

(1) Classification

MANDATORY: Service Bulletin must be accomplished.

(2) Accomplishment Timescale

Accomplishment of this Service Bulletin must be done 12 years after first entry into service.

This Service Bulletin has been classified Mandatory. It is expected that an Airworthiness Directive (AD) published by the European Aviation Safety Agency (EASA) will be issued to confirm this classification. It is anticipated that the AD will confirm the thresholds given but reference should be made to the AD for confirmation of the mandated accomplishment timescale.

F. APPROVAL

The technical content of this document is approved under the authority of Design Organisation Approval No. EASA.21J.031.

Printed in FRANCE © AIRBUS S.A.S. 2007. All rights reserved.

If an aircraft listed in the effectivity has a modification or repair embodied that is not of AIRBUS origin, and which affects the content of this Service Bulletin, the operator is responsible for obtaining approval by its airworthiness authority for any adaptation necessary before incorporation of the Service Bulletin.

G. MANPOWER

The manpower estimates given in this Service Bulletin are based on the direct labor cost to do the work. These estimates assume that the work will be done by experienced personnel, and may need to be revised upwards to suit operator's circumstances. The estimates do not include the time to prepare, plan or inspect the work. Manufacture and procurement of parts and tools, drying times for paints, sealants, etc., and general administration work are also not included.

Task 281239-831-895-001: Modification	
Get Access	2.00
On Aircraft	
Replace the LH Fuel Level Sensor Support Bracket	1.00
Replace the RH Fuel Level Sensor Support Bracket	1.00
Tests	1.00
Close-Up	2.00
TOTAL MANHOURS	7.00
ELAPSED TIME (HOURS)	4.00

NOTE: For an explanation of the man-hours and elapsed time, refer to the Gantt Chart, Fig. A-UAAAA given in Appendix 01 - Manpower Gantt Chart .

H. WEIGHT AND BALANCE

Not Changed

I. ELECTRICAL LOAD DATA

Not Changed

J. REFERENCES

Aircraft Maintenance Manual (AMM)	06-20-00 20-21-11 28-12-45 28-46-16	06-41-57 20-28-00 28-25-00	12-34-24 28-10-00 28-46-00
Consumable Material List (CML)			
ATA Common Support Data Dictionary (CSDD), Chapter 2			
Elec. Std. Practices Manual (ESPM)	20-51-20	20-55-00	
Standards Manual (SM)			

K. PUBLICATION AFFECTED

Illustrated Parts Catalog (IPC)	28-46-85

Printed in FRANCE © AIRBUS S.A.S. 2007. All rights reserved.

L. INTERCHANGEABILITY/MIXABILITY

NOTE: The interchangeability/mixability possibilities are for new or modified parts introduced by the accomplishment of this Service Bulletin.

DESCRIPTION	OLD PART N°	NEW PART N°	INT	MIXABILITY	SEE NOTES
Bracket Assy-Support	D2845002400000	D2845024000000	01	Not Applicable	(1)
Bracket Assy-Support	D2845002900000	D2845024100000	01	Not Applicable	(1)

NOTE: For definitions of interchangeability codes in column INT., refer to ATA Common Support Data Dictionary (CSDD), Chapter 2.

NOTE (1): One way Interchangeable with conditions:

- the Old Part Number may be used as a replacement where the Old Part Number was installed
- the New Part Number is an acceptable replacement for the New Part Number without conditions
- the New Part Number is an acceptable replacement for the Old Part Number under specific conditions only:
  . the condition is:
  It is recommended that the Old Part Number is always replaced with the New Part Number. Spares impacted, General Code J, ICY Number, D20-81
- if the Old Part Number is fitted, a gap check must be carried out to make sure that there is a minimum clearance of 0.5 mm (0.020 in.) between the bracket assembly and the rib.

M. SPARES

None

Printed in FRANCE © AIRBUS S.A.S. 2007. All rights reserved.

This Page Intentionally Left Blank

Printed in FRANCE © AIRBUS S.A.S. 2007. All rights reserved.

2. MATERIAL INFORMATION

**CONF ALL

A. MATERIAL - PRICE AND AVAILABILITY

(1) Procurement Addresses

Customers with aircraft shown in the effectivity of this Service Bulletin should send a purchase order to AIRBUS. Quote the number of this Service Bulletin. The address is:

Kit 281239B01R02 Kit 281239B02R02	AIRBUS Material, Logistics and Suppliers ATP II B Hein-Sass-Weg 24 21129 HAMBURG GERMANY For ordering by internet: http://spares.airbus.com For ordering by E-mail: airbus.kit@airbus.com Telephone Hotline: +49 40 743 51660

(2) Price and Availability

Kit 281239B01R02	
Cost	270.00 USD
Availability	180 calendar days from receipt of order

The availability given above is the standard lead time from the date of your purchase order. If items are required before this time, please include a retrofit planning schedule with your order so that we can try to comply with your requirements.

The sales terms (costs and availability) are estimated in relation to economic conditions. The latest valid price and lead time for ordering purposes shall be obtained through the AIRBUS Spares portal or through a request for quotation to airbus.kit@airbus.com.

Kit 281239B02R02	
Cost	270.00 USD
Availability	180 calendar days from receipt of order

The availability given above is the standard lead time from the date of your purchase order. If items are required before this time, please include a retrofit planning schedule with your order so that we can try to comply with your requirements.

The sales terms (costs and availability) are estimated in relation to economic conditions. The latest valid price and lead time for ordering purposes shall be obtained through the AIRBUS Spares portal or through a request for quotation to airbus.kit@airbus.com.

B. INDUSTRY SUPPORT INFORMATION

AIRBUS will not provide industry support for accomplishment of this Service Bulletin.

Printed in FRANCE © AIRBUS S.A.S. 2007. All rights reserved.

C. LIST OF COMPONENTS

Kit 281239B01R02

ITEM	NEW PART N°	QTY (UM)	KEYWORD	ITEM	OLD PART N°	INT	SEE NOTES
5	D2845024000000	1	SUPPORT	(5)	D2845002400000	01	
8	NSA5474-4K7	1	NUT	(8)	NSA5474-4K7		
10	NSA5474-3K7	1	NUT	(10)	NSA5474-3K7		

NOTE: For definitions of interchangeability codes in column INT., refer to ATA Common Support Data Dictionary (CSDD), Chapter 2.

NOTE: If you find part numbers of hardware components in the related kit(s) which you cannot identify in the LIST OF COMPONENTS of this Service Bulletin, refer to Standards Manual (SM). The SM will give you the correct part number to part number relationship.

Kit 281239B02R02

ITEM	NEW PART N°	QTY (UM)	KEYWORD	ITEM	OLD PART N°	INT	SEE NOTES
6	D2845024100000	1	SUPPORT	(6)	D2845002900000	01	
8	NSA5474-4K7	1	NUT	(8)	NSA5474-4K7		
10	NSA5474-3K7	1	NUT	(10)	NSA5474-3K7		

NOTE: For definitions of interchangeability codes in column INT., refer to ATA Common Support Data Dictionary (CSDD), Chapter 2.

NOTE: If you find part numbers of hardware components in the related kit(s) which you cannot identify in the LIST OF COMPONENTS of this Service Bulletin, refer to Standards Manual (SM). The SM will give you the correct part number to part number relationship.

D. LIST OF MATERIALS - OPERATOR SUPPLIED

(1) Consumable Materials

Consumable CMLB01

ITEM	DESCRIPTION	REFERENCE TO CML MAT. No.	QTY PER A/C	SEE NOTES
	Polysulfide Sealant-Fuel Tank Interfay	06ABC1	As required	
	Adhesion Promoter-For Polysulfide Sealant	06PAG1	As required	

(2) Components

None

Printed in FRANCE © AIRBUS S.A.S. 2007. All rights reserved.

(3) Equipment

None

E. PARTS TO BE RE-IDENTIFIED BY OPERATOR

None

F. TOOLING

None

Printed in FRANCE © AIRBUS S.A.S. 2007. All rights reserved.

This Page Intentionally Left Blank

Printed in FRANCE © AIRBUS S.A.S. 2007. All rights reserved.

3. ACCOMPLISHMENT INSTRUCTIONS

Task 281239-831-895-001 - Modification

WARNING: MAKE SURE THAT YOU OBEY ALL THE WARNINGS AND ALL THE CAUTIONS INCLUDED IN THE REFERENCED PROCEDURES.

WARNING: THIS PROCEDURE USES A FUEL SYSTEM ITEM THAT IS IN A CATEGORY KNOWN AS A CRITICAL DESIGN CONFIGURATION CONTROL LIMITATION (CDCCL). CDCCL IDENTIFIES AN ITEM THAT CAN BE THE SOURCE OF A POSSIBLE FUEL TANK IGNITION. YOU MUST KEEP ALL CDCCL ITEMS IN THE APPROVED CONFIGURATION. DAMAGE, WEAR OR CHANGES TO A CDCCL ITEM CAN CAUSE A POSSIBLE FUEL TANK EXPLOSION.

CAUTION: ALWAYS OBEY THE PRECAUTIONS THAT FOLLOW TO KEEP ELECTRICAL WIRING IN A SATISFACTORY CONDITION (ELECTRICALLY AND MECHANICALLY SERVICEABLE). WHEN YOU DO MAINTENANCE WORK, REPAIRS OR MODIFICATIONS, ALWAYS KEEP ELECTRICAL WIRING, COMPONENTS AND THE WORK AREA AS CLEAN AS POSSIBLE. TO DO THIS:

- PUT PROTECTION, SUCH AS PLASTIC SHEETING, CLOTHS, ETC., AS NECESSARY ON WIRING AND COMPONENTS.
- REGULARLY REMOVE ALL SHAVINGS, UNWANTED MATERIAL AND OTHER CONTAMINATION.

THESE PRECAUTIONS WILL DECREASE THE RISK OF CONTAMINATION AND DAMAGE TO THE ELECTRICAL WIRING INSTALLATION.

IF THERE IS CONTAMINATION, REFER TO ESPM 20-55-00.

NOTE: The accomplishment instructions of this Service Bulletin include procedures given in other documents or in other sections of the Service Bulletin. When the words 'refer to' are used and the operator has a procedure accepted by the local authority he belongs to, the accepted alternative procedure can be used. When the words 'in accordance with' are used then the given procedure must be followed.

NOTE: The access and close-up instructions, not comprising return to service tests, in this Service Bulletin do not constitute or affect the technical intent of the Service Bulletin. Operators can therefore, as deemed necessary, omit or add access and/or close-up steps to add flexibility to their maintenance operations as long as the technical intent of the Service Bulletin is met within the set parameters.

NOTE: Manual titles given in the accomplishment instructions are referred to by acronyms. Refer to paragraph 1.J., References, for the definition of acronyms.

NOTE: This Service Bulletin is classified mandatory or expected to be classified mandatory by an Airworthiness Directive (AD). The paragraphs 3.C. and 3.D. in these accomplishment instructions are Required for Compliance (RC) and must be done to comply with the AD. Other paragraphs are recommended and may be deviated from, done as part of other actions or done with accepted methods different from those given in the Service Bulletin, as long as the RC paragraphs can be done and

Printed in FRANCE © AIRBUS S.A.S. 2007. All rights reserved.

the aircraft can be put back into a serviceable condition.

NOTE: This Service Bulletin contains the instructions for the on-aircraft maintenance necessary to ensure the continued airworthiness of the aircraft.

For any deviations to the instructions contained herein, contact AIRBUS for further instructions and approval.

NOTE: Discarded parts must be managed at the operator's discretion.

Task Associated Data

Zone	
550 650	
Modified FIN	
28QJ1 28QJ2	
Access	
Panel	550CB 650CB
Manpower	
TOTAL MANHOURS	7.00
ELAPSED TIME (HOURS)	4.00

A. GENERAL

(1) Subtask 281239-910-401-001 - Standard Practices

Manpower Resources	
Skills	NON SPECIFIC

References	
Aircraft Maintenance Manual (AMM)	06-20-00, Page Block 001 06-41-57, Page Block 001 Task 20-21-11-911-001 Task 20-28-00-912-002 Task 28-10-00-910-001
Consumable Material List (CML)	
Elec. Std. Practices Manual (ESPM)	20-51-20

(a) For the specification of materials (Mat. No.) given in this Service Bulletin, refer to the Consumable Material List (CML).

(b) For the identification of zones, refer to AMM 06-20-00, Page Block 001.

(c) For the identification of access panels, refer to AMM 06-41-57, Page Block 001.

(d) Put all the retained hardware in identified plastic bags and attach the bags to the related unit.

(e) To torque tighten the standard threaded fasteners, refer to AMM Task 20-21-11-911-001.

Printed in FRANCE © AIRBUS S.A.S. 2007. All rights reserved.

(f) For the electrical bonding, refer to ESPM 20-51-20 and AMM Task 20-28-00-912-002.

(g) For fuel safety procedures when you work in a fuel tank, refer to AMM Task 28-10-00-910-001.

(2) Subtask 281239-839-401-001 - Administrative

Manpower Resources	
Skills	NON SPECIFIC

Write in the applicable aircraft records that you have done all the work given in this Service Bulletin.

B. PREPARATION

(1) Subtask 281239-941-401-001 - Job Set-up

Work Zones and Access Panels			
	Zone	Access/Work location	
	550	Access	Panel 550CB
	650	Access	Panel 650CB

Manpower Resources	
Skills	NON SPECIFIC

References	
Aircraft Maintenance Manual (AMM)	Task 12-34-24-869-002 Task 28-10-00-910-002 Task 28-12-45-000-001 Task 28-25-00-650-003 Task 28-46-16-000-001

NOTE: The items given in this note shall be considered as the basic Aircraft configuration before you start a maintenance task:

- Aircraft on the ground resting on landing gear (the ground safety locks and the wheel chocks are in position on the landing gear)
- Engine shut down, thrust reversers closed and locked
- Aircraft in clean configuration
- Parking brake applied
- Aircraft electrical network de-energized
- Hydraulic systems depressurized
- Access to the cockpit and cabin is available
- All circuit breakers are in closed position

Printed in FRANCE © AIRBUS S.A.S. 2007. All rights reserved.

- All controls in NORM, AUTO or OFF position.

(a) Make sure that the aircraft is electrically grounded, refer to AMM Task 12-34-24-869-002.

(b) Do the job set-up procedures as specified in the Removal of the Overflow Sensor, refer to AMM Task 28-46-16-000-001.

(c) Drain the fuel from the LH and RH Wing Surge Tanks, refer to AMM Task 28-25-00-650-003.

(d) Remove access panels 550CB and 650CB, refer to AMM Task 28-12-45-000-001.

(e) Vent the LH and RH Wing Surge Tanks, refer to AMM Task 28-10-00-910-002.

C. PROCEDURE

(1) Subtask 281239-960-401-001 - Replace the LH Fuel Level Sensor Support Bracket

Work Zones and Access Panels			
	Zone	Access/Work location	
	550	Access	Panel 550CB
		Work location	Rib 24 LH from Stringer 15 to Stringer 16

Manpower Resources	
Manhours	1.00
Minimum number of person	1
Subtask elapsed time	1.00
Skills	AIRFRAME

Material necessary to do the job

Kit 281239B01R02

ITEM	NEW PART N°	QTY (UM)	KEYWORD	SEE NOTES
5	D2845024000000	1	SUPPORT	
8	NSA5474-4K7	1	NUT	
10	NSA5474-3K7	1	NUT	

Consumable CMLB01

ITEM	DESCRIPTION	REFERENCE TO CML MAT. No.	QTY PER A/C	SEE NOTES
	Polysulfide Sealant-Fuel Tank Interfay	06ABC1	As required	
	Adhesion Promoter-For Polysulfide Sealant	06PAG1	As required	

Printed in FRANCE © AIRBUS S.A.S. 2007. All rights reserved.

References	
Aircraft Maintenance Manual (AMM)	Task 20-28-00-912-002 Task 28-46-16-000-001 Task 28-46-16-400-001
Elec. Std. Practices Manual (ESPM)	20-51-20
Fig. A-UBAAA Replace the LH and RH Fuel Level Sensor Support Brackets	Sheet 01 Sheet 02

(a) At Rib 24 LH between STGR 15 and STGR 16, refer to AMM Task 28-46-16-000-001 and Fig. A-UBAAA Sheet 01, remove:

1	Bolt	NAS1304-4	Item (1)	Retain
1	Washer	DHS783-6-20	Item (2)	Retain
1	Bolt	NAS1303-4	Item (11)	Retain
1	Washer	DHS783-5-20	Item (12)	Retain
1	Shield	D2845011320000	Item (13)	Retain
FIN 28QJ1				
1	Sensor - Overflow	EQ0028QJ1	Item (3)	Retain

NOTE: Do not electrically disconnect the Overflow Sensor 28QJ1.

You must support the Overflow Sensor, it must not hang freely.

1	Bolt-Protruding Head	ASNA2027BV4-3	Item (7)	Retain
1	Nut	NSA5474-4K7	Item (8)	Discard
1	Bolt-Protruding Head	ASNA2027BV3-3	Item (9)	Retain
1	Nut	NSA5474-3K7	Item (10)	Discard
1	Bracket Assy-Support	D2845002400000	Item (5)	Discard

(b) At Rib 24 LH between STGR 15 and STGR 16, refer to AMM Task 28-46-16-400-001 and Fig. A-UBAAA Sheet 02, apply:

Polysulfide Sealant-Fuel Tank Interfay	06ABC1	As required

to the contact surfaces of the Bracket - Support Assy LH, Item 5, and to the shank of the Bolts, (7) and (9). and install:

1	Bracket Assy-Support LH	D2845024000000	Item 5

Printed in FRANCE © AIRBUS S.A.S. 2007. All rights reserved.

1	Bolt-Protruding Head	ASNA2027BV3-3	Item (9)	Retained at removal
1	Nut	NSA5474-3K7	Item 10	
1	Bolt-Protruding Head	ASNA2027BV4-3	Item (7)	Retained at removal
1	Nut	NSA5474-4K7	Item 8	
1	Shield	D2845011320000	Item (13)	Retained at removal
FIN 28QJ1				
1	Sensor - Overflow	EQ0028QJ1	Item (3)	Retained at removal
1	Washer	DHS783-6-20	Item (2)	Retained at removal
1	Bolt	NAS1304-4	Item (1)	Retained at removal
1	Washer	DHS783-5-20	Item (12)	Retained at removal
1	Bolt	NAS1303-4	Item (11)	Retained at removal

(c) Electrically bond where shown, refer to Fig. A-UBAAA Sheet 02, ESPM 20-51-20 and AMM Task 20-28-00-912-002.

(d) Apply:

Adhesion Promoter-For Polysulfide Sealant	06PAG1	As required

and

Polysulfide Sealant-Fuel Tank Interfay	06ABC1	As required

to the:

- heads and tails of the Bolts, Items (1), (7), (9) and (11)
- the Nuts, Items 8 and 10.

Printed in FRANCE © AIRBUS S.A.S. 2007. All rights reserved.

(2) Subtask 281239-960-402-001 - Replace the RH Fuel Level Sensor Support Bracket

Work Zones and Access Panels			
	Zone	Access/Work location	
	650	Access	Panel 650CB
		Work location	Rib 24 RH from Stringer 15 to Stringer 16

Manpower Resources	
Manhours	1.00
Minimum number of person	1
Subtask elapsed time	1.00
Skills	AIRFRAME

Material necessary to do the job

Kit 281239B02R02				
ITEM	NEW PART N°	QTY (UM)	KEYWORD	SEE NOTES
6	D2845024100000	1	SUPPORT	
8	NSA5474-4K7	1	NUT	
10	NSA5474-3K7	1	NUT	

Consumable CMLB01				
ITEM	DESCRIPTION	REFERENCE TO CML MAT. No.	QTY PER A/C	SEE NOTES
	Polysulfide Sealant-Fuel Tank Interfay	06ABC1	As required	
	Adhesion Promoter-For Polysulfide Sealant	06PAG1	As required	

References	
Aircraft Maintenance Manual (AMM)	Task 20-28-00-912-002 Task 28-46-16-000-001 Task 28-46-16-400-001
Elec. Std. Practices Manual (ESPM)	20-51-20
Fig. A-UBAAA Replace the LH and RH Fuel Level Sensor Support Brackets	Sheet 01 Sheet 02

(a) At Rib 24 RH between STGR 15 and STGR 16, refer to AMM Task 28-46-16-000-001 and Fig. A-UBAAA Sheet 01, remove:

1	Bolt	NAS1304-4	Item (1)	Retain
1	Washer	DHS783-6-20	Item (2)	Retain
1	Bolt	NAS1303-4	Item (11)	Retain

Printed in FRANCE © AIRBUS S.A.S. 2007. All rights reserved.

1	Washer	DHS783-5-20	Item (12)	Retain
FIN 28QJ2				
1	Sensor - Overflow	EQ0028QJ2	Item (4)	Retain

NOTE: Do not electrically disconnect the Overflow Sensor 28QJ2.

You must support the Overflow Sensor, it must not hang freely.

1	Shield	D2845011320000	Item (13)	Retain
1	Bolt-Protruding Head	ASNA2027BV4-3	Item (7)	Retain
1	Nut	NSA5474-4K7	Item (8)	Discard
1	Bolt-Protruding Head	ASNA2027BV3-3	Item (9)	Retain
1	Nut	NSA5474-3K7	Item (10)	Discard
1	Bracket Assy-Support	D2845002900000	Item (6)	Discard

(b) At Rib 24 RH between STGR 15 and STGR 16, refer to AMM Task 28-46-16-400-001 and Fig. A-UBAAA Sheet 02, apply:

Polysulfide Sealant- Fuel Tank Interfay	06ABC1	As required

to the contact surfaces of the Bracket - Support Assy RH, Item 6, and to the shank of the Bolts, (7) and (9). and install:

1	Bracket Assy-Support RH	D2845024100000	Item 6	
1	Bolt-Protruding Head	ASNA2027BV3-3	Item (9)	Retained at removal
1	Nut	NSA5474-3K7	Item 10	
1	Bolt-Protruding Head	ASNA2027BV4-3	Item (7)	Retained at removal
1	Nut	NSA5474-4K7	Item 8	
1	Shield	D2845011320000	Item (13)	Retained at removal
FIN 28QJ2				
1	Sensor - Overflow	EQ0028QJ2	Item (4)	Retained at removal

Printed in FRANCE © AIRBUS S.A.S. 2007. All rights reserved.

1	Washer	DHS783-6-20	Item (2)	Retained at removal
1	Bolt	NAS1304-4	Item (1)	Retained at removal
1	Washer	DHS783-5-20	Item (12)	Retained at removal
1	Bolt	NAS1303-4	Item (11)	Retained at removal

(c) Electrically bond where shown, refer to Fig. A-UBAAA Sheet 02, ESPM 20-51-20 and AMM Task 20-28-00-912-002.

(d) Apply:

Adhesion Promoter-For Polysulfide Sealant 06PAG1 As required

and

Polysulfide Sealant-Fuel Tank Interfay 06ABC1 As required

to the:

- heads and tails of the Bolts, Items (1), (7), (9) and (11)
- the Nuts, Items 8 and 10.

D. TEST

NOTE: The listed subtasks are not in sequence with the work steps. The operator can change the sequence.

(1) Subtask 281239-740-401-001 - BITE Test of the Overflow Sensors

Manpower Resources	
Skills	AIRFRAME

References	
Aircraft Maintenance Manual (AMM)	Task 28-46-00-740-001

(a) Do the BITE test of the Overflow Sensors 28QJ1 and 28QJ2, refer to AMM Task 28-46-00-740-001.

Printed in FRANCE © AIRBUS S.A.S. 2007. All rights reserved.

E. CLOSE-UP

(1) Subtask 281239-942-401-001 - Close-up

Work Zones and Access Panels			
	Zone	Access/Work location	
	550	Access	Panel 550CB
	650	Access	Panel 650CB

Manpower Resources	
Skills	NON SPECIFIC

References	
Aircraft Maintenance Manual (AMM)	Task 28-12-45-400-002 Task 28-46-16-400-001

(a) Make sure that the work areas are clean and clear of tools and other items of equipment.

(b) Install access panels 550CB and 650CB, refer to AMM Task 28-12-45-400-002.

(c) Do the close-up procedures as specified in the Installation of the Overflow Sensor, refer to AMM Task 28-46-16-400-001.

(d) Do a check for leaks at access panels 550CB and 650CB, no leaks are permitted.

(e) Put the aircraft back to its initial configuration.

Printed in FRANCE © AIRBUS S.A.S. 2007. All rights reserved.

**CONF ALL

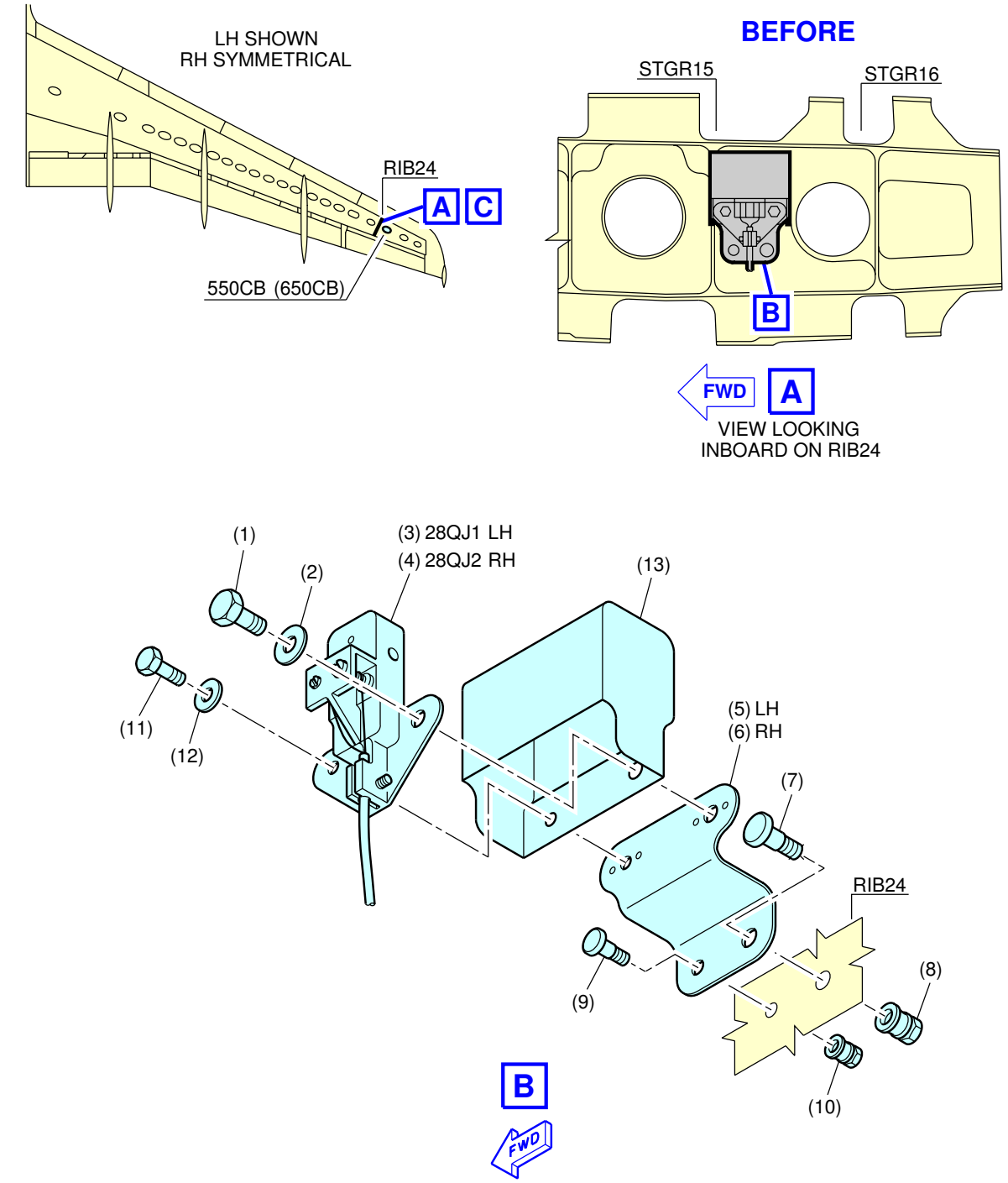

Figure A-UBAAA - Sheet 01
Replace the LH and RH Fuel Level Sensor Support Brackets

Printed in FRANCE © AIRBUS S.A.S. 2007. All rights reserved.

**CONF ALL

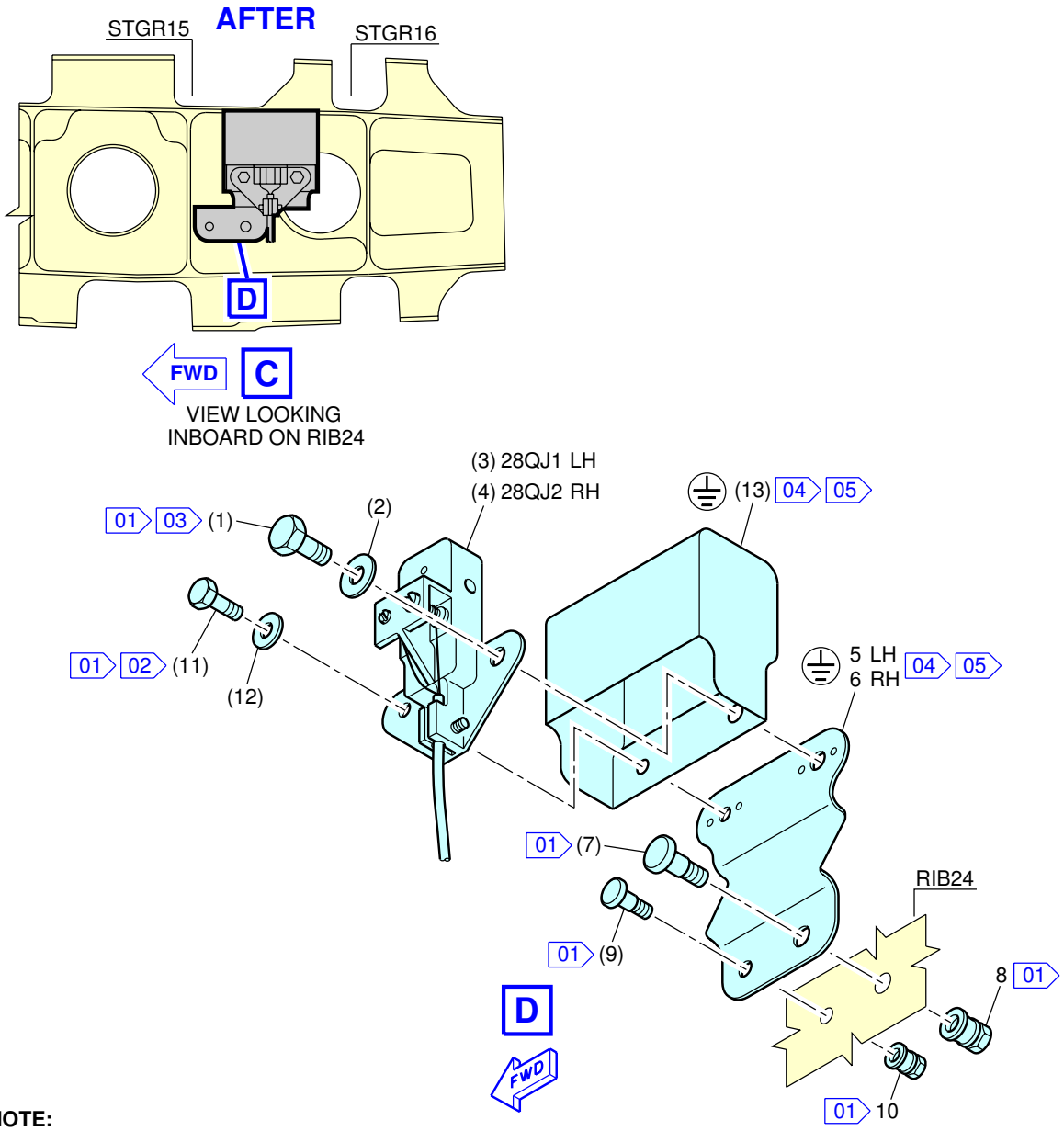

NOTE:

01 ALL CADMIUM PLATED BOLT HEADS AND TAILS AND STEEL NUTS NOT IN THE TANK BOUNDARIES BUT INSIDE THE TANK ARE TO BE OVERCOAT SEALED WITH MAT. NOS 06PAG1 AND 06ABC1.

02 TORQUE TIGHTEN TO 2.25 – 2.8 Nm (19.91 – 24.78 lbf. in)

03 TORQUE TIGHTEN TO 4.5 – 5.6 Nm (39.83 – 49.56 lbf. in)

04 ASSEMBLE WITH MAT. NO. 06ABC1.

05 ELECTRICALLY BOND AND TEST

N_SB_281239_7_BAAA_02_02

Figure A-UBAAA - Sheet 02
Replace the LH and RH Fuel Level Sensor Support Brackets

Printed in FRANCE © AIRBUS S.A.S. 2007. All rights reserved.

**CONF ALL

ELAPSED TIME ASSUMPTION SERVICE BULLETIN No A320–28–1239 01 02

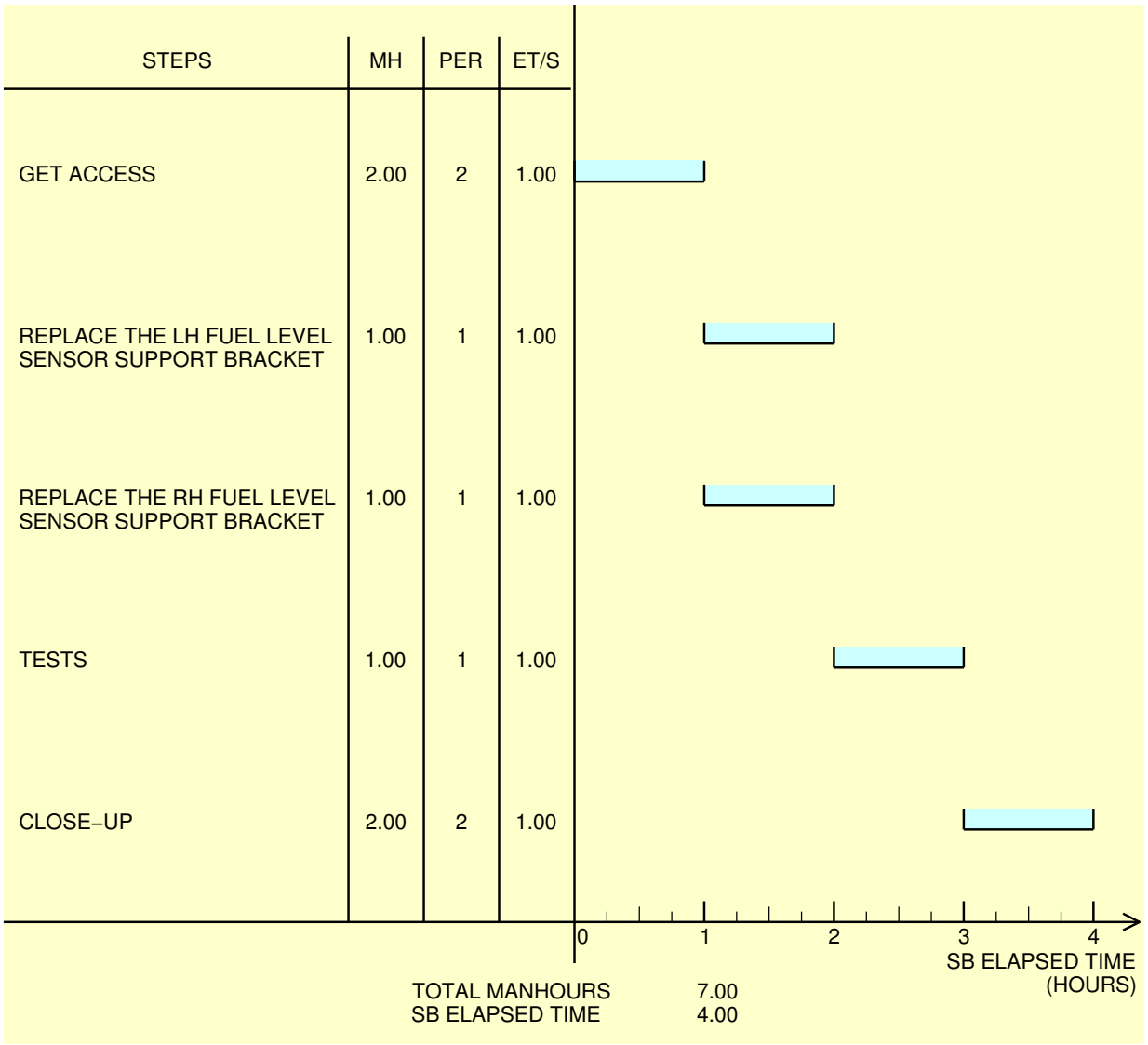

NOTE:

01 THIS CHART IS ONLY A PROPOSAL.
OPERATORS MAY DETERMINE THAT ANOTHER WAY TO DO THE WORK IS MORE SUITABLE FOR THEM.

02 IF A VSB IS INVOLVED, THE ASSOCIATED MANHOURS ARE NOT REFLECTED IN THIS GANTT CHART.

MH : MANHOURS
PER : NUMBER OF PERSONS
ET/S: ELAPSED TIME PER STEP

N_SB_281239_7_AAAA_01_01

Figure A-UAAAA - Sheet 01
Appendix 01 - Manpower Gantt Chart

Printed in FRANCE © AIRBUS S.A.S. 2007. All rights reserved.

SERVICE BULLETIN
Service Bulletin REPORTING

TITLE: FUEL - INDICATING - INTRODUCE COMMON FUEL LEVEL SENSOR SUPPORT BRACKET

MODIFICATION No.: 158133J4169

NOTE: This modification is related to an airworthiness issue which has been re-classified and confirmed by EASA as minor in accordance with EU Part 21.A.91. As such, this is handled by AIRBUS under its Design Organisation Approval No. EASA.21J.031.

SB Reporting status

This Service Bulletin will only be incorporated into affected customized Maintenance and Flight Operations Products if it is duly reported to Airbus.

General information

The SB Reporting policy is published in ISI 00.00.00135. This document provides information regarding: the SB Reporting means and benefits, the update of customized Maintenance Products and customized Flight Operations Products.

If this Service Bulletin has an operational impact, refer to paragraph "Flight Operations Products" for further information on the update of affected Flight Operations Products.

SB Reporting procedure

Standard practice to report SB is to use the online reporting application on AirbusWorld.

Refer to ISI 00.00.00179:
- For complete information on reporting means to Airbus. Question 2 "What are the standard practices for SB reporting?"
- If this SB requires previous or simultaneous accomplishment of other SBs, Question 3 "What about the reporting of prerequisite Service Bulletin?"

NOTE: ISI 00.00.00179 covers all the frequently asked questions about SB Reporting. It is revised on a regular basis.

Printed in FRANCE © AIRBUS S.A.S. 2007. All rights reserved.

SERVICE BULLETIN
QUALITY PERCEPTION FORM

Use this form to tell us what is your perception of the quality of this Service Bulletin. The reported data that you provide us will be used to analyse areas of difficulties and to take corrective action to further improve the quality of our Service Bulletins.
We thank you for the time you have taken in completing this form.

(Please rate on a scale of 1 to 4, with 4 being the highest score)

- Quality rating of this SB	4	3	2	1
- Quality rating of the Accomplishment Instructions	4	3	2	1
- Quality rating of the Illustrations	4	3	2	1
- Is this SB easy to understand ?	Y / N			

If you have had difficulties in the accomplishment of this SB please quote below the area(s) and give a short description of the issue.

	Planning		Material		Instructions
X	Effectivity	X	Kit content	X	Preparation
X	Reason	X	List of Materials Operator Supplied	X	Mod/Inspection
X	Manpower	X	Industry support	X	Test
X	References	X	Re-identification	X	Close-Up
X	Publication	X	Tooling	X	Illustrations

Comments:

Operator: Date:

Name/Title:

Please return this form to:

AIRBUS
CUSTOMER SERVICES DIRECTORATE
1 Rond Point Maurice Bellonte
31707 BLAGNAC CEDEX FRANCE

Attn : SEM4 Service Bulletins Management
FAX : (33) 5 61 93 42 51

Or via your Resident Customer Support Office.

Printed in FRANCE © AIRBUS S.A.S. 2007. All rights reserved.