

Valid for Version(s): T1, T2, T2+, T3, P1, P2, P2+, P3
635 T1, 635 T2+, 635 T3, 635 P2+, 635 P3

ALERT SERVICE BULLETIN

CORRECTIVE MEASURE

ROTOR FLIGHT CONTROL - Cyclic stick
Retrofit of cyclic stick weight compensation

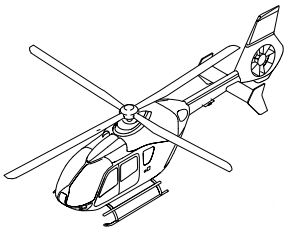

For the attention of	
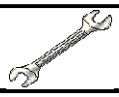	

Revision No.	Date of issue
Revision 0	2018-02-07

Summary:

With this Alert Service Bulletin (ASB), Airbus Helicopters Deutschland (AHD) prescribes the retrofit of the weight compensation of the cyclic stick.

Compliance:

Compliance with this Alert Service Bulletin is mandatory.

1 PLANNING INFORMATION

1.A EFFECTIVITY

1.A.1 Helicopters/installed equipment and parts

EC135, T1, T2, T2+, T3, P1, P2, P2+, P3, 635 T1, 635 T2+, 635 T3, 635 P2+, 635 P3, all S/N with installed 3-axis Auto Pilot System up to 1263 inclusive and S/N 1265.
The change will be introduced into serial production with S/N 1266.

Before accomplishment of this ASB	After accomplishment of this ASB
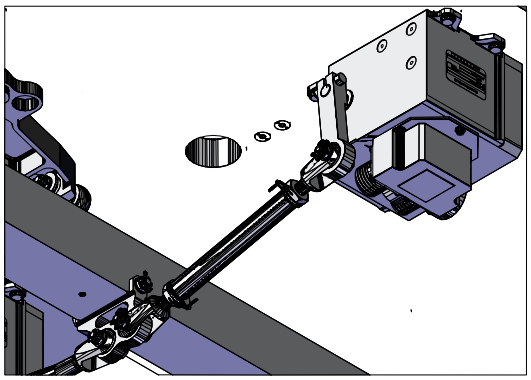	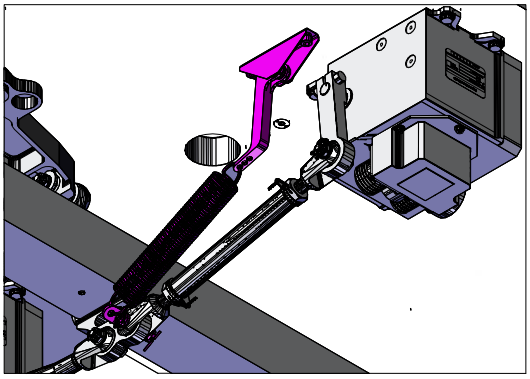
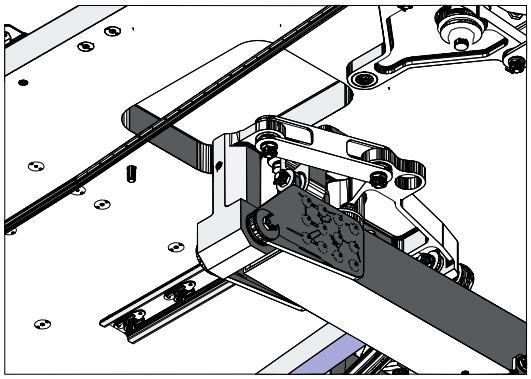	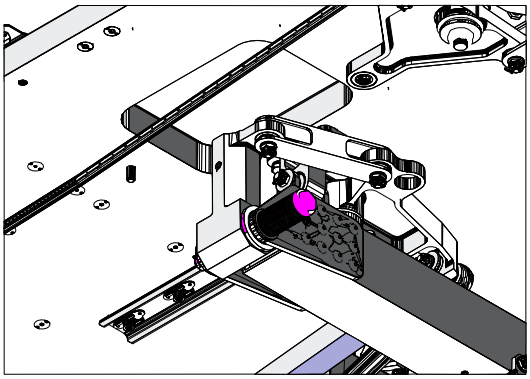
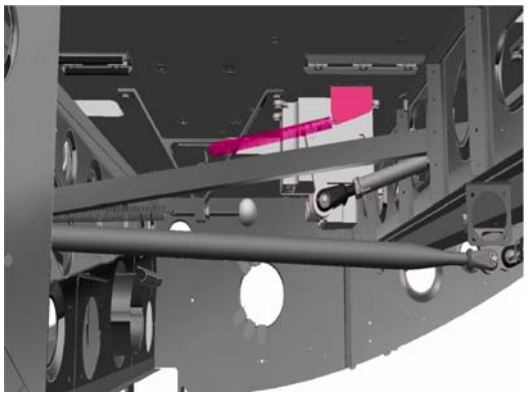	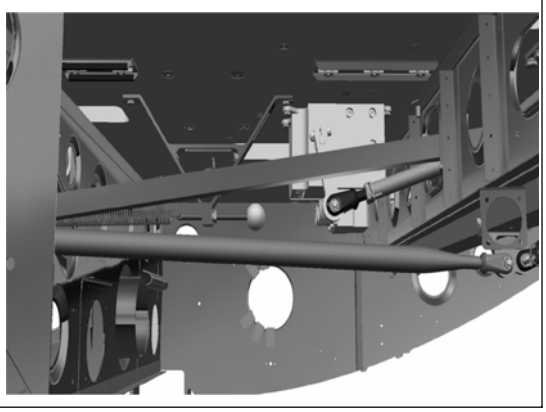

1.A.2 Non-installed equipment and parts

Not applicable.

1.B ASSOCIATED REQUIREMENTS

None.

1.C REASON

As a result of reassessment of the flight control system, it has been determined that a failure that leads to an uncommanded disengagement of the main rotor trim actuators, during flight with autopilot engaged and hands-off controls, could lead to high roll and pitch rates, which would require pilot intervention within a reaction time below that required by the current airworthiness standards. With accomplishment of this ASB this issue is corrected.

1.D DESCRIPTION

Open the forward access cover. Install the spring mod. on the longitudinal axis. Install the friction brake on the lateral axis. Adjust the friction brake. Check for free movement of the cyclic control. Close the forward access cover.

1.E COMPLIANCE

1.E.1 Compliance at H/C manufacturer level

Helicopters/installed equipment and parts:

Install the cyclic stick weight compensation in accordance with Section 3.B of this ASB before the helicopter is delivered at the latest.

Non-installed equipment and parts:

Not affected.

1.E.2 Compliance in service

Helicopters/installed equipment and parts:

The retrofit of the cyclic stick weight compensation (see Section 3.B of this ASB) must be accomplished by 31.10.2018 at the latest.

Non-installed equipment and parts:

Not affected.

1.F APPROVAL

Approval of modifications:

The information or instructions contained in this document refer to change no. 4845. The technical content of this document is approved by EASA.

1.G MANPOWER

Qualification	Mechanic	Electrician	Pilot	Others
Estimated Man-hours	approx. 8 h	-	-	-

1.H WEIGHT AND BALANCE

Weight: 0.204 kg

Arm longitudinal: 2024 mm — Moment longitudinal: 413 kgmm

Arm lateral: 232 mm — Moment lateral: 47 kgmm

1.I POWER CONSUMPTION

Not affected.

1.J SOFTWARE UPGRADES/UPDATES

Not affected.

1.K REFERENCES

SPM(MTC) EC135, SRM EC135, AMM EC135/635

1.L OTHER AFFECTED PUBLICATIONS

Publications to be updated:

The changes to AMM EC135 and IPC EC135 which are required as a result of this ASB will be incorporated with one of the next revisions.

1.M INTERCHANGEABILITY OR MIXABILITY OF PARTS

Interchangeability:

Not affected.

Mixability:

Not affected.

2 MATERIAL INFORMATION

2.A MATERIAL: PRICE - AVAILABILITY - PROCUREMENT

All material kits required will be provided free of cost by AHD only within the time limits that apply for the compliance (Section 1.E). Material that is ordered outside the time limits given in the ASB will be charged according to the ruling prices.

2.B LOGISTIC INFORMATION

Due to the large number of impacted helicopter, availability of parts and the limited time frame it is necessary to schedule the delivery of kits for the individual helicopter.
Please fill in and send back the reply form on page 19 of this ASB. The kits will be send in accordance with this reply.

2.C MATERIAL REQUIRED PER HELICOPTER/COMPONENT

Material kit to be ordered for one helicopter:

Material kit SB-135-67A-032-2C i.a.w. design document L670M1004894.

No.	Keyword	Qty	New P/N	Old P/N	Rem.
1	Bracket assy	1	L670M1014101	-	-
2	Spring	1	L670M1015201	-	-
3	Eye bolt	1	117-41381-01 or L671M1021301	-	-
4	Washer	2	EN2139-06020	-	-
5	Washer	1	EN2139-06010	-	-
		1	-	EN2139-06010	A
6	Nut	1	MBBN3129-06D	-	-
		1	-	MBBN3129-06D	A
7	Split pin	1	EN2367-14018	-	-
		1	-	EN2367-14018	A
8	Screw	2	ISO4762-M5X14-A2-70	-	-
9	Washer	2	EN3822-050	-	-
10	Bolt	1	L671M1030220	-	-
11	Cap spring	32	DIN2093B20	-	B
12	Washer	1	LN65045-16	-	-

No.	Keyword	Qty	New P/N	Old P/N	Rem.
13	Friction disc	1	L221M0012206	-	-
14	Nut	1	MBBN3129-08D	-	-
		1	-	MBBN3129-08D	A
15	Split pin	1	LN94-20025	-	-
		1	-	LN94-20025	A
16	Insert	2	SL10-438M5	-	-
17	Bolt	1	-	L635M1021201	A
18	Bolt	1	-	L671M1005256	A
19	Washer	1	-	LN29952-0815M	A
20	Angle	1	-	L221M1020206	A
21	Spring	1	-	RZ087DX	A
22	Screw	2	-	DIN65268-05012A or LN9038-05012	A
23	Washer	2	-	LN9025-0510L or LN9025-0520L	A

Remark:

A = Airbus Helicopters Deutschland does not take back parts with old part numbers.

B = The material kit contains more spring caps than the usually necessary number.

This document is available on the internet: www.airbushelicopters.com/techpub/

Consumables to be ordered separately:

Products can be ordered from KLX Aerospace Solutions. The given CM numbers are i.a.w. the list of consumable materials of the Standard Practice Manual (MTC).
Website: https://klxaerospace.com
Email: integration@klx.com

WARNING

RESPECT THE SAFETY DATA SHEET OF THE MANUFACTURER.

No.	Keyword	Qty. (approx.)	Specification **	CM	Rem.
1	Aceton	a.n.*	-	203	-
2	Corrosion preventive paste	0.5 liter	-	518	-
3	Adhesive	5 g	EC 1838B-A	601	A
4	Adhesive paste	1 g	-	6057	-
*a.n. = as needed ** Specification i.a.w. MTC, 20-01-01-102.					

Remark:

A = It is mandatory to use adhesive CM 601. Do not replace it by adhesive CM 671 as described in the list of consumable materials.

Special tools:

Keyword	Qty.	Specification	Rem.
Spring balance	1	Measurement range up to 50 N	A

Remark:

A = Commercial product.

2.D MATERIAL TO BE RETURNED

None.

3 ACCOMPLISHMENT INSTRUCTIONS

3.A GENERAL

Not applicable.

3.B WORK STEPS

3.B.1 Preliminary steps

1. De-energize the electrical system of the helicopter, refer to AMM, 24-00-00, 2-1.
2. Remove the forward access cover, refer to AMM, 52-40-00, 4-3.

3.B.2 Procedure

NOTE It is not necessary to remove the angle (6, Fig. 1) of the control rod assy (5).

1. Remove the spring (1, Fig. 1) from the control rod assy (5).
2. Remove the spring (1, Fig. 1) from the angle (2) and from the helicopter.
3. Remove the screws (3, Fig. 1), washers (4) and the angle (2) from the helicopter.

Detail E (see Figure 8)

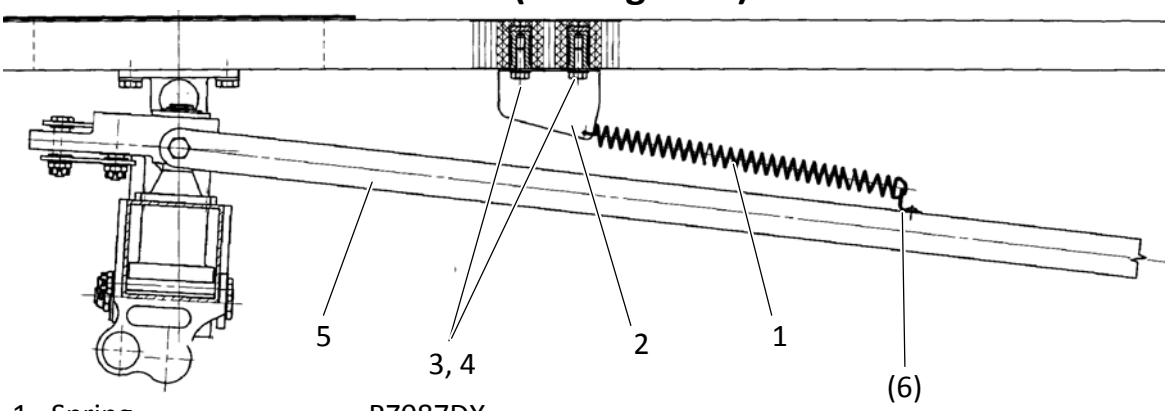

1	Spring	RZ087DX
2	Angle	L221M1020206
3	Screw	DIN65268-05012A or LN9038-05012
4	Washer	LN9025-0510L or LN9025-0520L
5	Control rod assy	L221M1021101
6	Angle	

Removal of angle and spring
Figure 1

4. Install the inserts (1, Fig. 2) into the cockpit floor with adhesive paste (CM 6057), refer to the measurements given in figure 2 and install in accordance with MTC 20-02-08-406 and SRM 51-20-00, 8-18.
5. Let the adhesive paste (CM 6057) cure, refer to the instructions of the manufacturer.

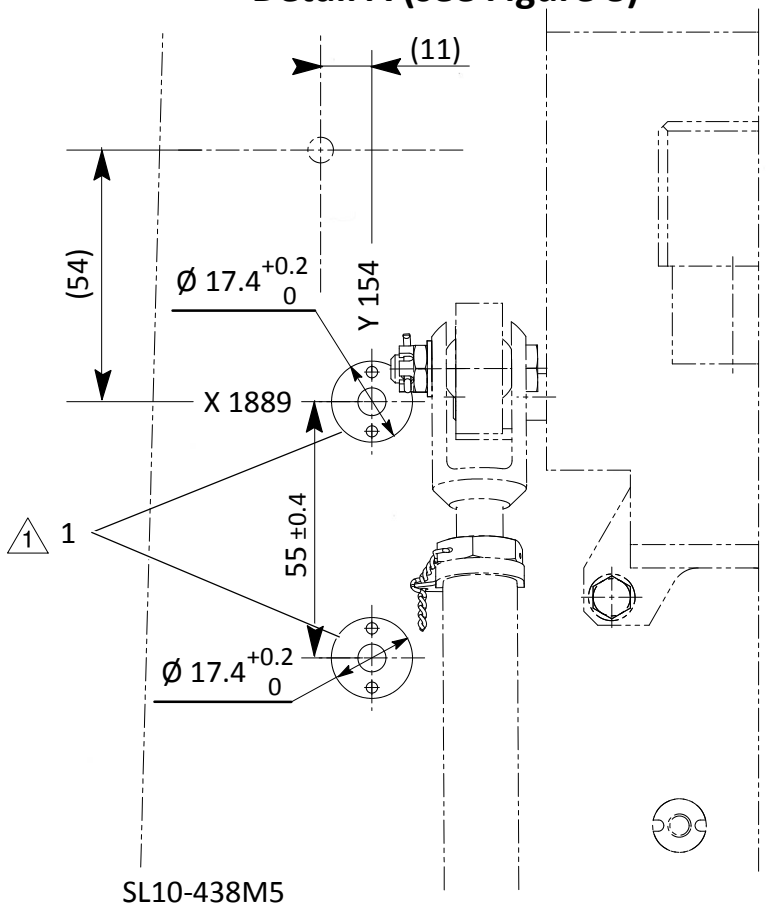

1 Insert SL10-438M5

1 Installed with adhesive paste (CM 6057)

Installation of the inserts in the cockpit floor
Figure 2

NOTE When the connections of the control rods of the cyclic stick are opened, the cyclic stick can move uncontrollably.

6. Fixate the cyclic stick to prevent it from falling in logitudinal and / or lateral direction.

7. Replace the bolt (4, Fig. 3) with the eye bolt as follows:
   a. Remove and discard the split pin (1, Fig. 3) and the nut (2).
   b. Remove the washer (3, Fig. 3) and the bolt (4).
   c. Install the eye bolt (5, Fig. 3) and the washers (6, 7) wet with corrosion preventive paste (CM 518).
   d. Torque the nut (8, Fig. 3) to a value between 5 Nm and 6 Nm.
   e. Install the split pin (9, Fig. 3).

Detail B (see Figure 8)

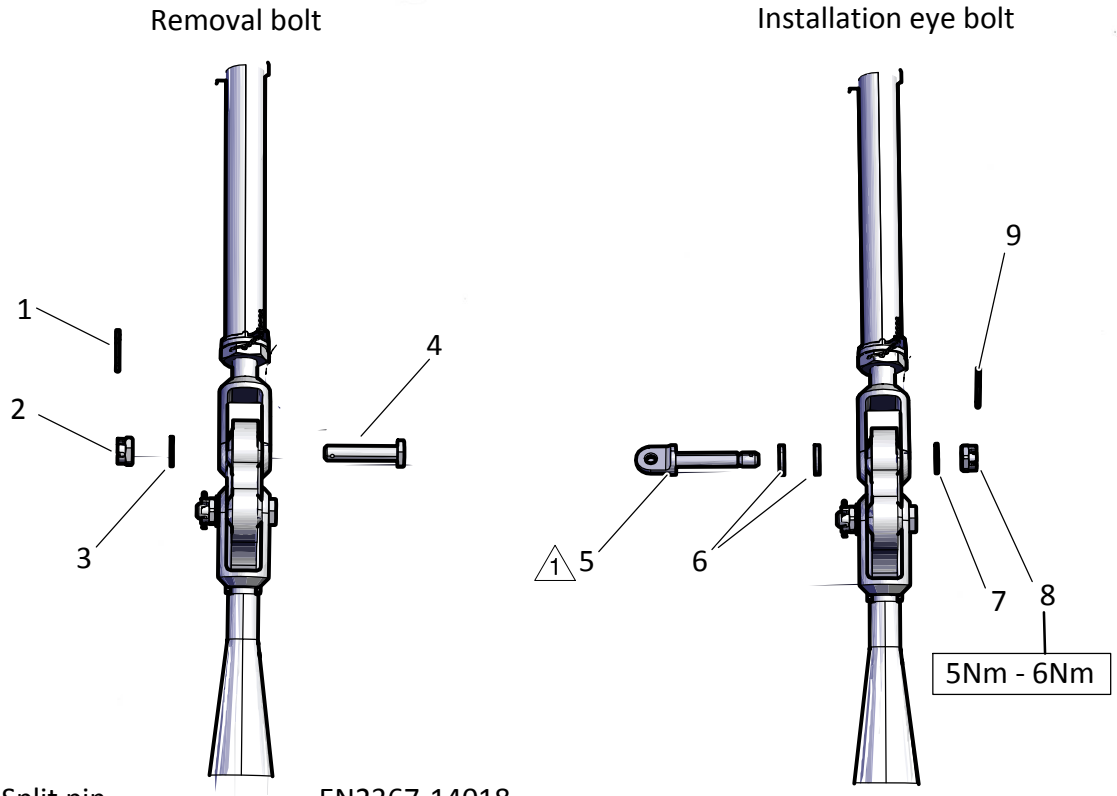

1	Split pin	EN2367-14018
2	Nut	MBBN3129-06D
3	Washer	EN2139-06010
4	Bolt	L635M1021201
5	Eye bolt	117-41381-01 or L671M1021301
6	Washer	EN2139-06020
7	Washer	EN2139-06010
8	Nut	MBBN3129-06D
9	Split pin	EN2367-14018

(1) Inserted with corrosion preventive paste (CM 518).

Replacement of the bolt with the eye bolt
Figure 3

f. Make sure that the safety element of the control rod (1, Fig. 4) does not have the same orientation as the eye bolt (2).

g. If the safety of the control rod (1, Fig. 4) has the same orientation as the eye bolt (2), turn the safety around.

Detail F (see Figure 8)

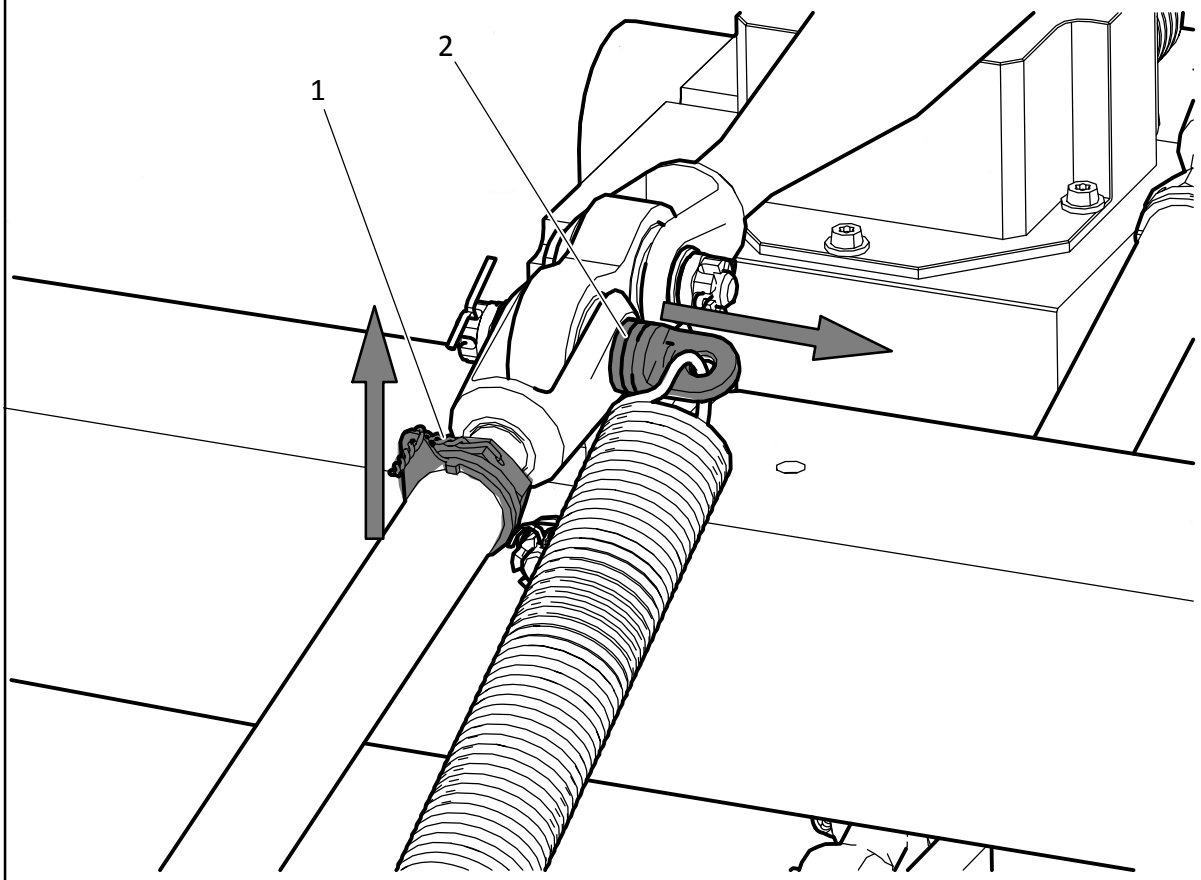

Orientation

1 Safety of control rod
2 Eye bolt 117-41381-01 or L671M1021301

Orientation of the safety of the control rod and the eye bolt
Figure 4

8. Install the bracket assy (3, Fig. 5) to the cockpit floor as follows:
   a. Put the bracket assy (3, Fig. 5) in its installation position on the inserts.
   b. Install the bracket assy (3, Fig. 5) with the washers (2) and the screws (1) wet with corrosion preventive paste (CM 518).
   c. Push the bracket assy (3, Fig. 5) as far as possible in flight direction.
   d. Torque the screws (1, Fig. 5) to a value between 3 Nm and 4 Nm.
   e. Make sure that the lever of the bracket assy (3, Fig. 5) can move freely.
   f. If the lever of the bracket assy (3, Fig. 5) is blocked by a screw (1), loosen the screws (1) and move the bracket assy (3, Fig. 5) until the lever can move freely. Then torque the screws (1, Fig. 5) to a value between 3 Nm and 4 Nm.

View C (see Figure 8)

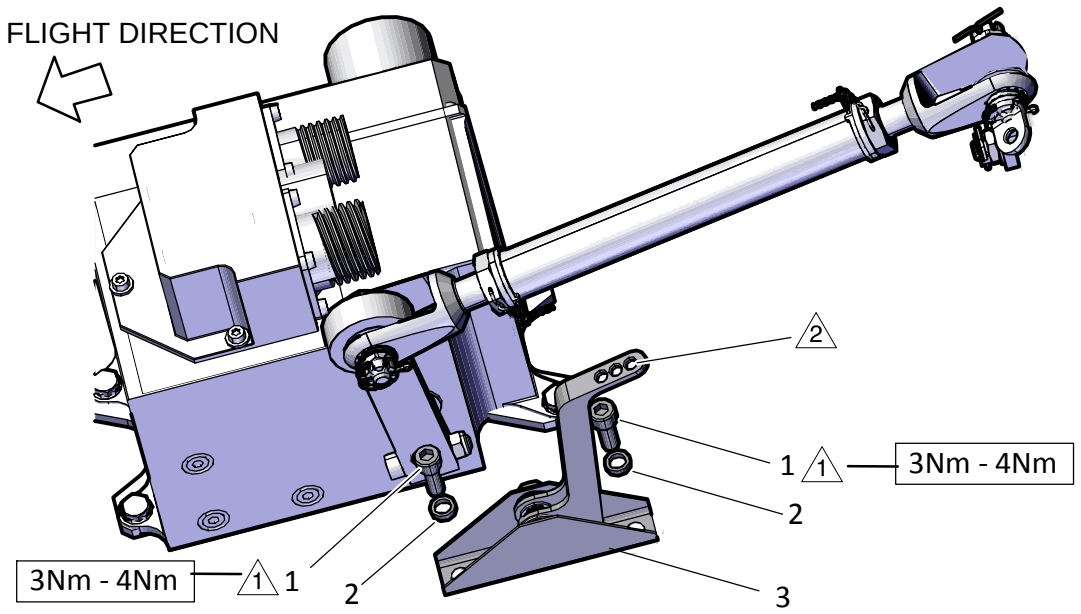

1	Screw	ISO4762-M5X12-A2-70
2	Washer	EN3822-050
3	Bracket assy	L670M1014101

1 Inserted with corrosion preventive paste (CM 518)
2 First hole on the bracket assy

Installation of the bracket assy
Figure 5

9. Install the spring between the first hole of the bracket assy and the eye bolt, refer to figure 8.
10. Replace the bolt (1, Fig. 6) with the bolt (7) as follows:
    a. Remove and discard the split pin (6, Fig. 6) and the nut (5).
    b. Remove the washer (4, Fig. 6) and the bolt (1).

c. Make sure that the bushings (2, 3, Fig. 6) are still in their installation positions.

d. Make sure that the collar of the bushing (3, Fig. 6) fits against the shaft (13).

e. If the bushings (2, 3, Fig. 6) are too loose, fixate them to prevent them from falling out.

f. Remove discs from the washer (9, Fig. 6) until the thickness of the washer (9) is 0.8 mm.

g. Put the washer (9, Fig. 6) in its installation position (centered on the hole) and bond it with adhesive (CM 601) to the shaft (13). (see photos and illustration in figure 9)

h. Fixate the washer (9, Fig. 6) to prevent it from moving during the curing time of the adhesive (CM 601).

i. Put the friction disc (10, Fig. 6) in its installation position (centered on the hole) and bond it with adhesive (CM 601) to the lever (14). (see photos and illustration in figure 9)

j. Fixate the friction disc (10, Fig. 6) to prevent it from moving during the curing time of the adhesive (CM 601).

k. Let the adhesive (CM 601) cure, refer to the instruction of the manufacturer.

NOTE The number of cap springs (8, Fig. 6) in the material kit is higher than the usually necessary number of 30 cap springs (8, Fig. 6).

l. Put 30 cap springs (8, Fig. 6) in their installation positions on the close tolerance bolt (7).

CAUTION

DURING INSTALLATION OF THE CLOSE TOLERANCE BOLT THE BUSHINGS MAY BE MOVED, WHICH WILL RESULT IN ISSUES IN THE FLIGHT CONTROL. MAKE SURE THAT THE BUSHINGS ARE IN THEIR INSTALLATION POSITIONS AFTER INSTALLATION OF THE CLOSE TOLERANCE BOLT.

m. Install the cap springs (8, Fig. 6) and the close tolerance bolt (7) through the shaft (13) and the lever (14) with the castellated nut (11).

n. Make sure that the bushings (2, 3, Fig. 6) are still in their installation positions. (see figure 6)

o. Adjust the lateral friction break, refer to the description in section 3.B.3 in this ASB.

p. Do the measurement of the breakout forces, refer to the description in section 3.B.4 in this ASB.

q. Do the check of the free movement of the cyclic stick, refer to the description in section 3.B.5 in this ASB.

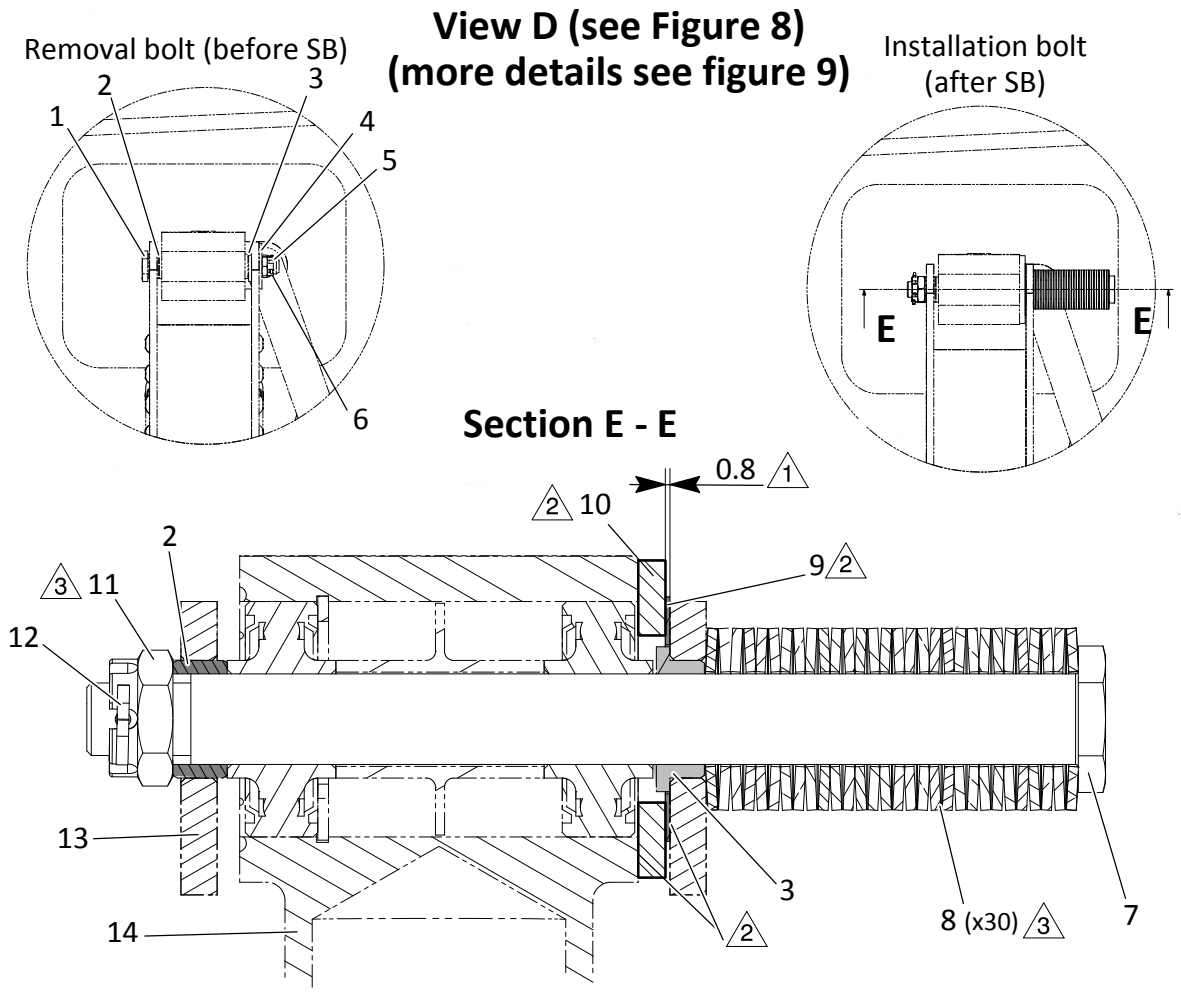

1	Bolt	L671M1005256	8	Cap spring	DIN2093B20
2	Bushing	L671M1005238	9	Washer	LN65045-16
3	Bushing	L671M1005235	10	Friction disc	L331M0012206
4	Washer	LN29952-0815M	11	Nut	MBBN3129-08D
5	Nut	MBBN3129-08D	12	Split pin	LN94-20025
6	Split pin	LN94-20025	13	Shaft	L671M1013101
7	Bolt	DIN65338K10098T	14	Lever	B671M2012101

1 Remove discs until specified value is achieved.

2 Bonded with adhesive (CM 601). Polish bonding surface slightly and clean it with acetone (CM 203) before bonding. Make sure that washer (9) and the friction disc (10) are not bonded together and that the friction area is free of adhesive residues.

3 Tighten the nut (11) until the required breakout force according to the rigging specification at the upper end of the cyclic stick in both directions (left / right) is reached. Maximum torque: 6 Nm.
If the split pin cannot be pinned and/or the required force cannot be reached, add or remove additional cap springs (8).

Replacement of the bolt with the bolt
Figure 6

3.B.3 Adjustment of the lateral friction brake

1. Make sure that the friction brake is fully released for the adjustment procedure.
2. Connect the external pump drive to the hydraulic power system, refer to AMM, 29-00-00, 2-1.
3. Energize the electrical system, refer to AMM, 24-00-00, 2-1.
4. Switch the external pump drive on.
5. Move the cyclic stick at least 10 times through its full motion range for the lateral axis.

CAUTION

DAMAGE TO THE FORCED TRIM RELEASE (FTR) SWITCH ON THE CYCLIC STICK. DO NOT APPLY TO MUCH FORCE ON THE FTR SWITCH WHEN THE SWITCH IS PRESSED CONTINUOUSLY BY A SUITABLE TOOL.

6. Use a suitable tool to continuously press the FTR switch on the cyclic stick.
7. Have a look at the measurement points on the cyclic stick in the figure 7.

NOTE The breakout forces have to be measured free from play.

8. Move the cyclic stick about 10mm along the axis to be measured.

NOTE The breakout force is defined as the initial force which is necessary to move the controls out of their related rest position.

9. Push the cyclic stick in measurement direction and read the force necessary to start the cyclic stick moving from the spring balance.
10. Repeat the measurement of the breakout force at least three times in both directions and calculate the average value for each direction.

CAUTION

DAMAGE TO THE BOLT AND CAP SPRINGS IF THE MAXIMUM TORQUE IS MORE THAN 6 Nm. DO NOT TORQUE THE NUT (11, Fig. 6) **TO A TORQUE VALUE OF MORE THAN 6 Nm. IF THE NECESSARY BREAKOUT FORCE CANNOT BE REACHED ADD OR REMOVE ADDITIONAL CAP SPRINGS.**

11. Torque the nut (11, Fig. 6) and measure the breakout force again, refer to the steps 7 to 10 in section 3.B.3 in this ASB. The breakout force should increase 1 N to 1.5 N.

12. If the increase of the breakout force is less than 1N, do the step 11 again.
13. Secure the castellated nut (11, Fig. 6) with the split pin (12).
14. Release the FTR switch on the cyclic stick.
15. Switch the external pump drive off.

3.B.4 Measurement of the breakout force of the cyclic stick in lateral direction

NOTE All force data refer to the helicopter with active hydraulic system (both systems) and normal operating pressure. Also the measurement is done against the trim spring force. The switch Forced Trim Release (FTR) on the cyclic stick is **not** pressed. The cyclic stick is in the “neutral” position.

1. If not already connected, connect the external pump drive to the hydraulic power system, refer to AMM, 29-00-00, 1-1.
2. Switch the external pump drive on.

NOTE The breakout forces have to be measured free from play.

3. Move the cyclic stick about 10mm along the axis to be measured.
4. The measurement points on the cyclic stick can be seen in the figure 7.

NOTE The breakout force is defined as the initial force which is necessary to move the controls out of their related rest position.

5. Push the cyclic stick in measurement direction and read the force necessary to start the cyclic stick moving from the spring balance.
6. Repeat the measurement of the breakout force at least three times in both directions and calculate the average value.
7. Make sure that the breakout force is between 6 N and 11 N.
8. Push the cyclic stick approximately 90 mm from the center position with the spring balance and read the maximum control force from the spring balance in both directions.
9. Make sure that the maximum control force is less than 30 N.
10. Switch the external pump drive off.



Grip reference point cyclic grip lateral direction
Figure 7

3.B.5 Final steps

1. Check freedom of movement of the cyclic stick as described within the following procedure:
   a. Make sure that all tools and equipment were removed below the cockpit floor.
   b. Switch the external pump drive on.
   c. Slowly move the cyclic stick through the complete control range.
   d. Meanwhile check the freedom of movement in all positions.
   e. Make sure that the primary end stops in the main rotor actuator can be reached, which means that the main piston of the actuator does not move anymore, while the input lever is still able to move.
   f. Switch the external pump drive off.
2. Disconnect the external pump drive from the hydraulic power system, refer to AMM, 29-00-00,2-1.
3. Close the forwad access cover, refer to AMM, 52-40-00, 4-3.

3.C COMPLIANCE CONFIRMATION

Compliance with this document:

Confirm accomplishment of this ASB by an entry in the historical record of the helicopter.

3.D OPERATING AND MAINTENANCE INSTRUCTIONS

Operating instructions:

After accomplishment of the measures given in this ASB, the pilots must be informed on its content.

Maintenance instructions:

Not applicable.

4 APPENDIX

Reply form sheet.

Reply form sheet

Reply form sheet for ASB EC135-67A-032 Retrofit of cyclic stick weight compensation.

Please fill in the reply form sheet and send it to the given e-mail.
For optimized, internal allocation please add operator's name and the related ASB number in the email subject line.

Please note that the receipt of this reply form sheet does NOT trigger the delivery of the parts. We thus ask all direct customers of Airbus Helicopters to also send their order with this reply sheet. All other Airbus Helicopters customers send their orders to their usual Airbus Helicopters subsidiary.

To
Airbus Helicopters Deutschland GmbH
Customer Support

e-mail: contact.replysheet-servicebulletin.ahd@airbus.com

Address of operator:

_____

_____

_____

Helicopter S/N	Estimated installation date

Helicopter S/N	Estimated installation date

Helicopter S/N	Estimated installation date

Date: _____ Signature: _____

Please copy page! Original page remains in Alert Service Bulletin!

Before ASB

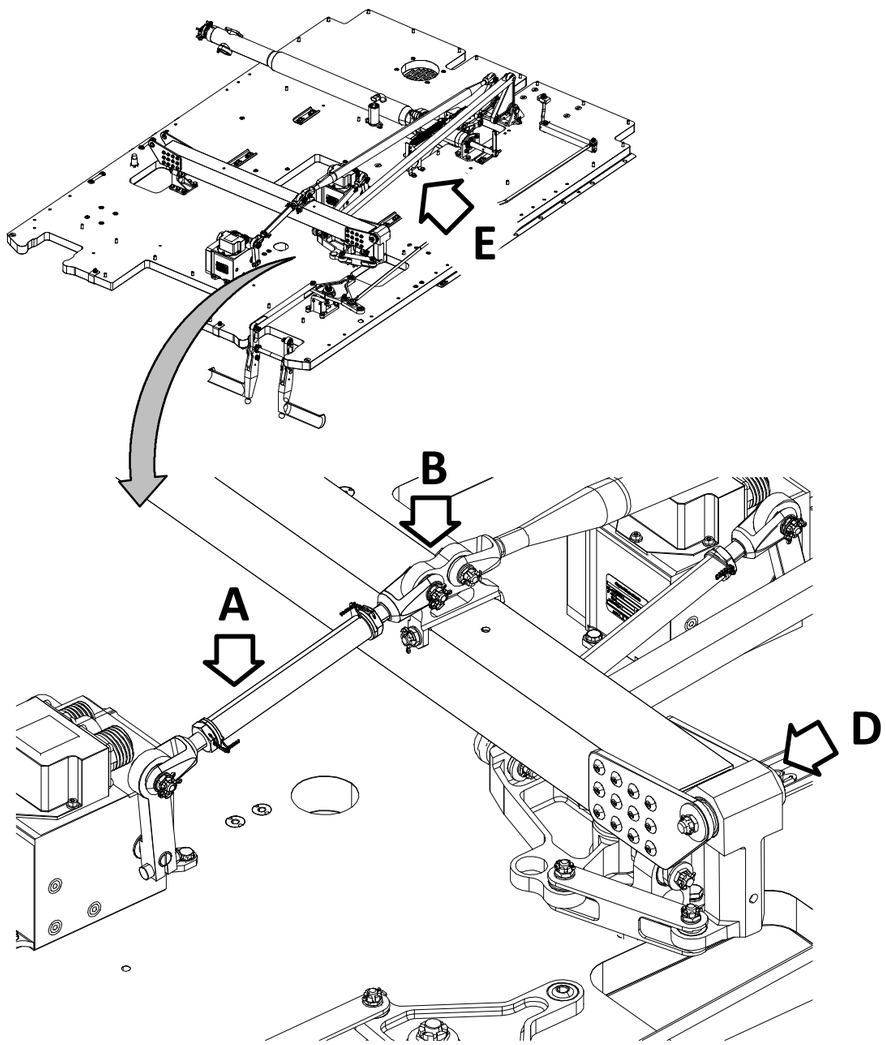

View from bottom side

After ASB

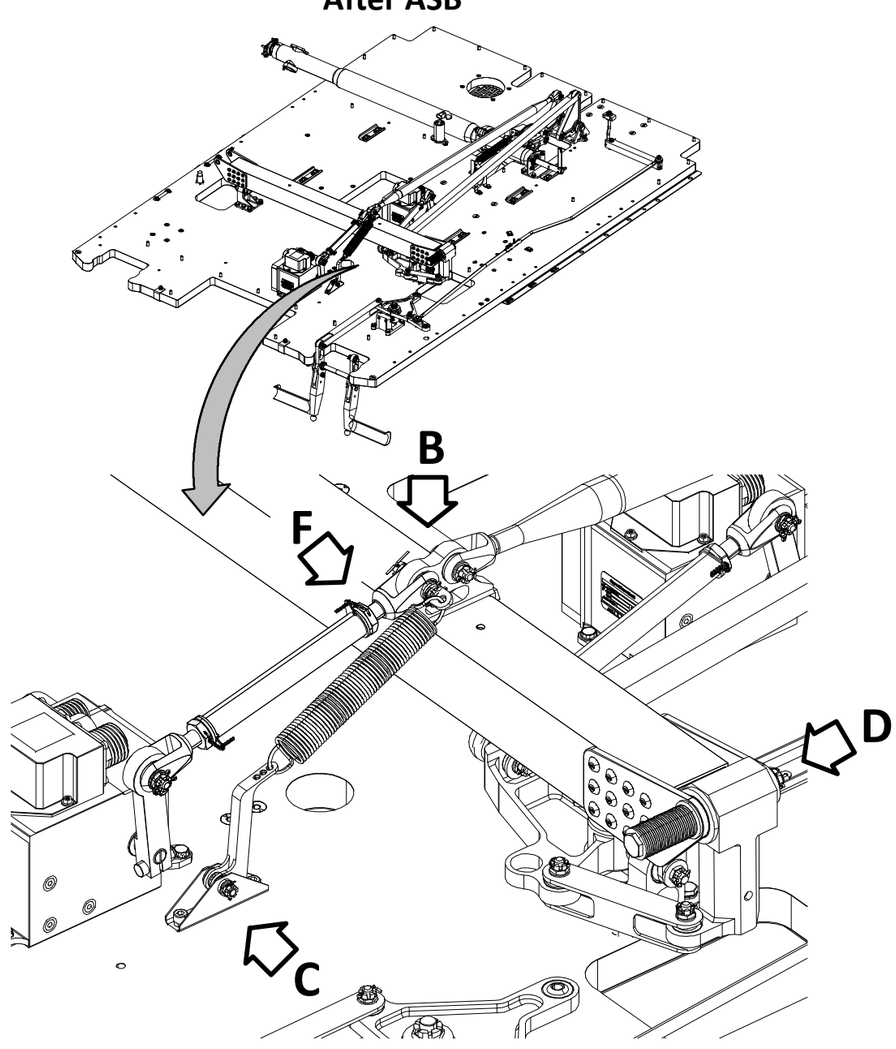

1 View A Figure 2
2 View B Figure 3
3 View C Figure 5
4 View D Figure 6
5 View E Figure 1
6 View F Figure 4

General view of views and sections
Figure 8





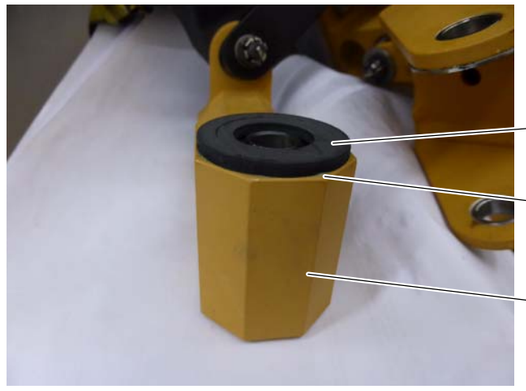

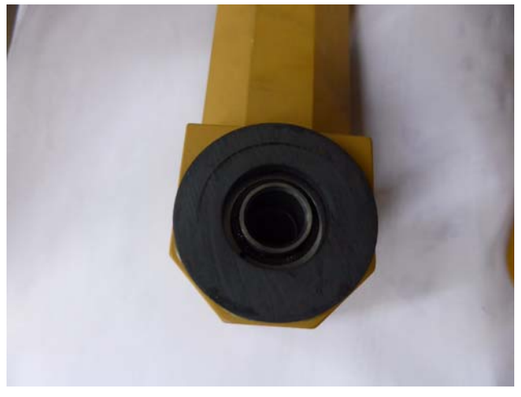

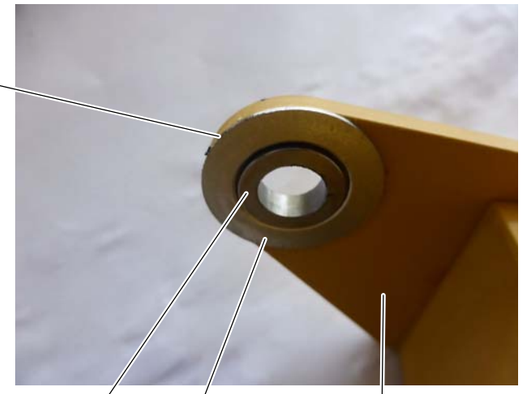

2	Bushing	L671M1005238
3	Bushing	L671M1005235
7	Bolt	DIN65338K10098T
8	Cap spring	DIN2093B20
9	Washer	LN65045-16
10	Friction disc	L331M0012206
11	Nut	MBBN3129-08D
12	Split pin	LN94-20025
13	Shaft	L671M1013101
14	Lever	B671M2012101

1. Remove discs until specified value is achieved.
2. Bonded with adhesive (CM 671). Polish bonding surface slightly and clean it with acetone (CM 203) before bonding. Make sure that washer (9) and the friction disc (10) are not bonded together and that the friction area is free of adhesive residues.
3. Tighten the castellated nut (11) until the required breakout force according to the rigging specification at the upper end of the cyclic stick in both directions (left / right) is reached. Maximum torque: 6 Nm.
   If the split pin cannot be pinned and/or the required force cannot be reached, add or remove additional cap springs (8).

Photos of the installation of the friction disc and the washer on the shaft assy and the lever
Figure 9