BOMBARDIER

SERVICE BULLETIN
REVISION TRANSMITTAL SHEET

SERVICE BULLETIN 670BA–36–022

SUBJECT: Pneumatic – Bleed–Air Leak Detection and Warning System – Installation of New Ducts, Protective Blankets, and New Sensing Elements in the Main Landing Gear and Overwing Areas

This page transmits:
Revision B of Service Bulletin 670BA–36–022, dated Dec 20/2016.

The changes in this revision have no effect on aircraft that have had this service bulletin incorporated.

Reason:

Revised Accomplishment Instructions, paragraph 2., to:

Change some steps

This revision also includes small editorial changes that do not have an effect on the technical content.

Instructions:

Discard the copy of Service Bulletin 670BA–36–022, Revision A, dated Sep 16/2016. Replace with the copy attached.

Service Bulletin History:

Initial issue, dated May 30/2016.
Revision A, dated Sep 16/2016.

BOMBARDIER
the evolution of mobility

SERVICE BULLETIN

Technical Publications

THIS SERVICE BULLETIN IS SENT TO EACH OPERATOR. IF THE OPERATOR HAS LEASED AIRCRAFT, SEND THIS SERVICE BULLETIN TO THE LESSEE. IF THE OPERATOR HAS SOLD AIRCRAFT OR TRANSFERRED SPARES IN THE LAST SIX MONTHS, SEND THIS SERVICE BULLETIN TO THE NEW OWNER, UNLESS CONFIRMATION WAS RECEIVED THAT BOMBARDIER HAS INCLUDED THE NEW OPERATOR ON THE DISTRIBUTION LIST.

ATA SYSTEM: 36−21 NUMBER: 670BA−36−022

SUBJECT: Pneumatic − Bleed−Air Leak Detection and Warning System − Installation of New Ducts, Protective Blankets, and New Sensing Elements in the Main Landing Gear and Overwing Areas

1. PLANNING INFORMATION

A. Effectivity

(1) Aircraft Affected:

AIRCRAFT MODEL	SERVICE AIRCRAFT SERIAL NUMBERS	PRODUCTION AIRCRAFT SERIAL NUMBERS
CL−600−2E25	19001 thru 19048	[1]
[1] Aircraft serial numbers 19049 and subsequent serial numbers will have an equivalent modification incorporated before delivery.		

NOTE: The instructions in this service bulletin are only applicable to the systems and parts installed at the time of delivery of the aircraft or as changed by Bombardier service bulletins. Before you do this service bulletin, examine all Supplemental Type Certificates (STCs) and Supplemental Type Approvals (STAs) or equivalent action changes to make sure you can complete this service bulletin.

B. Reason

(1) Condition

It is possible for the shrouds of the High Pressure (HP) bleed–air ducts to not meet the maximum permitted leakage rate. This is caused by a degradation in the shroud material. If there is a hot air leak after the rupture of a high–pressure duct, the duct shroud will not transmit the air correctly through the vent holes of the shroud. If a bleed air leak is not sensed by the bleed leak detection system and the hot air goes in the direction of the adjacent structure and/or system components, it can have an unwanted effect on structure and system components.

(2) Evidence

Unsatisfactory shroud leakage rate were reported by operators. Also, reports have shown that some components and structural areas need more protection from the flow of direct bleed air leak.

(3) Objective/Benefit

This service bulletin gives the procedure to change the wing anti–ice ducts in the wheel well and overwing areas, add protective blankets on the upper surface of the wing box and fuel components, and to change the bleed leak sensing elements in the wheel well and the overwing areas. This will prevent damage to the wing box structure and fuel components if a bleed air leak occurs

C. Description

Circuit breakers are opened. The overwing access panels and the wheel bins are removed. The bleed leak sensing elements located in the MLG bay and the overwing area are removed. The left and right wing anti–ice ducts are removed.

Protective blankets are added on the upper surface of the wing box (above the shield overwing blankets) and some fuel tubes. New left and right wing anti–ice ducts are installed. New sensing elements are installed in the MLG bay and overwing area.

The overwing access panels and the wheel bins are installed. Circuit breakers are closed. The initiation test for the bleed leak system is done.

D. Compliance

Bombardier recommends that this service bulletin be done at no more than 6600 flight hours, or at next 10000 flight hours scheduled maintenance check, or 32 months, whichever comes first, from the release date of this service bulletin, unless otherwise directed by the airworthiness authority of the operator.

NOTE: If it is not possible to complete all the instructions in this service bulletin because of the configuration of the aircraft, speak with a representative of Bombardier in the CRC at 1–844–272–2720 (1–844–CRC–CRC0) or 1–514–855–8500 or e-mail at thd.crj@aero.bombardier.com for analysis and to get an approved disposition to complete this service bulletin.

This service bulletin does not affect Airworthiness Limitations (AWLs) or Damage Tolerance Inspections (DTIs).

E. Approval

The technical content of this service bulletin has been approved under the authority of the TCCA Design Approval Organization No: DAO #93–Q–02.

F. Manpower

The man-hours given below are estimates for direct labor done by an experienced crew on an aircraft prepared for maintenance.

These estimates do not include the time necessary for:

–Administrative functions such as planning, liaising, familiarization, and report writing.

–Non-productive elapsed time such as rest time, having meals, and crew shift changes.

–Elapsed time such as for paint to dry, sealant to cure, and fuel tank venting.

–Preparation for modification (unless specified in the Accomplishment Instructions) such as cleaning and getting parts, tools, consumables, and ground equipment.

–Quality assurance inspections, troubleshooting and/or correction of discrepancies found when a task is done.

–All other activities that are not considered by Bombardier as directly related to the accomplishment of this procedure.

NOTE: For on-site labor assistance, please speak with a Fleet Services representative for an estimate. Call the Fleet Services Team through the CRC at 1–844–272–2720 (1–844–CRC–CRC0) or 1–514–855–8500 or e-mail at thd.crj@aero.bombardier.com.

It will take an estimated 90.0 man-hours to complete this service bulletin. The man-hours are divided in the table that follows (elapsed cure time is not included in the man-hour summary given above):

TASK	MAN-HOURS
(1) Job Set-Up	20.0
(2) Procedure	60.0
(3) Test	2.0
(4) Job Close-Out	8.0

G. Material – Price and Availability

(1) The parts in the table that follows are be necessary to do this service bulletin and are available from Bombardier.

PART NUMBER	NAME	QTY
NAS1801–3–25	Screw	1
NAS43DD3–76N	Spacer	1

(2) The kits in the tables that follow are available from Bombardier.

NOTE: For a list of kit contents, refer to paragraph 3.A.

KIT NUMBER	NAME
670BA36022K1	Blanket Kit – HP Ducts
670BA36022K2	Anti–Ice Ducts
670BA36022K3A	Sensing Elements Kit

For Aircraft 19024 to 19048

KIT NUMBER	NAME
670BA36022K4	Anti−Ice Ducts Boot Seal

(3) Please send a purchase order to the address below to schedule kit delivery:

Bombardier
Service Bulletin Kit Support Team
123 Garratt Blvd, N42−24
Toronto, Ontario
Canada M3K 1Y5
Fax: 416−375−3060
Phone: 416−375−3920
e-mail: sbkits@aero.bombardier.com

Please contact the Service Bulletin Kit Support Team at the address above for terms and conditions.

(4) Refer to paragraph 3.B. for a list of consumables for this service bulletin.

H. Tooling — Price and Availability

There are no tool kits for this service bulletin. Refer to paragraph 3.C. for a list of special tools and equipment for this service bulletin.

I. Weight and Balance

WEIGHT	ARM	MOMENT [1]
+15.3 lb	+889.7 in.	+13.612 (1000 lb-in.)
+6.94 kg	+22.60 m	+0.1568 (1000 kg-m)
[1] The value in the Moment column is divided by 1000. Refer to Weight and Balance Manual.		

J. Electrical Load Data

Not changed.

K. References

Refer to the SB Introduction document for definition or explanation of service bulletin content.

Restriction and/or Special Instruction (RSI) C−36−1722−00, Issue NC
Modification Summary 698T040649, Issue D
Aircraft Maintenance Manual (AMM)
Structural Repair Manual (SRM)
Electrical/Electronic Components − Standard Practices Manual (ESPM)
For Bombardier reference only: PCA 76220

L. Other Publications Affected

Aircraft Maintenance Manual (AMM)
Aircraft Illustrated Parts Catalogue (AIPC)
Maintenance Requirement Manual (MRM)

M. Relationship Chart

PRE-SB PART NUMBER	NAME	POST-SB PART NUMBER	NAME
GG670−80201−1	Sensing element	04−31102−M109	Sensing element
GG670−80202−1	Sensing element	04−31102−M129	Sensing element
GG698−80323−5	Coupling Cover	GG468−4010−5	Coupling Cover
GG698−80323−5 or GG698−80323−7	Coupling Cover	GG468−4010−15	Coupling Cover
GG698−80615−1	Supply Duct	SF698−80615−1	Supply Duct
GG698−80615−2	Supply Duct	SF698−80615−2	Supply Duct
GG698−80501−3	Supply Duct	SF698−80501−1	Supply Duct
GG698−80501−4	Supply Duct	SF698−80501−2	Supply Duct
GG698−80506−1	Supply Duct	GG670−80506−3	Supply Duct
GG698−80506−2	Supply Duct	GG670−80506−4	Supply Duct
GG698−80508−1	Supply Duct	GG670−80508−1	Supply Duct
GG698−80508−2	Supply Duct	GG670−80508−2	Supply Duct

2. ACCOMPLISHMENT INSTRUCTIONS

Reference Information

REFERENCE	DESIGNATION
AMM 12–00–00–867–801	Standard Aircraft Configuration for Maintenance
AMM 20–21–00–910–801	Torquing of Threaded Fasteners
AMM 20–51–00–400–802	Installation of Lockwire
AMM 20–51–00–400–807	Installation of Safety Cables
AMM 24–00–00–910–801	Electrical/Electronic Safety Precautions
AMM 24–00–00–861–801	Connect Electrical Power to the Aircraft
AMM 24–00–00–861–802	Remove Electrical Power from the Aircraft
AMM 30–11–00–790–801	Leak Test of the Wing Anti–Ice Ducts
AMM 30–11–04–000–801	Removal of the Supply Duct
AMM 30–11–04–400–801	Installation of the Supply Duct
AMM 30–11–06–000–801	Removal of the Supply Duct
AMM 30–11–06–400–801	Installation of the Supply Duct
AMM 36–21–00–710–801	Operational Test of the Bleed–Air Leak–Detection and Warning System
AMM 36–21–00–740–801	Initiation Test of the Bleed Air Leak–Detection Loops
AMM 36–21–00–760–801	Resistance and Conductance Test of the Bleed–Air Leak–Detection Elements
AMM 36–21–00–910–801	Bleed–Air Leak–Detection–Elements and Components Maintenance Practices
AMM 36–21–05–000–809	Removal of the Left–Wing–Supply Bleed Air Leak–Detection Loops (Landing Gear Bay FS779.50–FS830.40+16.60)
AMM 36–21–05–000–810	Removal of the Left–Wing–Supply Bleed Air Leak–Detection Loops (Wing Box FS677.00–FS779.50)

REFERENCE	DESIGNATION
AMM 36–21–07–000–811	Removal of the Right–Wing–Supply Bleed Air Leak–Detection Loops (Landing Gear Bay FS779.50–FS830.40–16.60)
AMM 36–21–07–000–812	Removal of the Right–Wing–Supply Bleed Air Leak–Detection Loops (Wing Box FS677.00–FS779.50)
AMM 51–31–00–992–801	Consumable Materials
AMM 51–80–00–760–802	Electrical Bonding Resistance Values
AMM 53–82–82–000–801	Removal of the Overwing Fairing, FS697 – FS735 (171AL/172AR)
AMM 53–82–82–000–802	Removal of the Overwing Fairing, FS735 – FS768 (171BL/172BR)
AMM 53–82–82–000–803	Removal of the Overwing Fairing, FS768 – FS801 (171CL/172CR)
AMM 53–42–32–000–801	Removal of the Forward–Fairing Access Panel (191CB/192CB)
AMM 53–82–82–400–801	Installation of the Overwing Fairing, FS697 – FS735 (171AL/172AR)
AMM 53–82–82–400–802	Installation of the Overwing Fairing, FS735 – FS768 (171BL/172BR)
AMM 53–82–82–400–803	Installation of the Overwing Fairing, FS768 – FS801 (171CL/172CR)
AMM 53–42–32–400–801	Installation of the Forward–Fairing Access Panel (191CB/192CB)
AMM 53–83–89–000–801	Removal of the Main Landing Gear (MLG) Wheel Bin
AMM 53–83–89–400–801	Installation of the Main Landing Gear (MLG) Wheel Bin
ESPM 20–32–00	Heat Shrinkable Tubing
ESPM 20–12–00	Wiring

REFERENCE	DESIGNATION
SRM 51–23–00–001–001	Pressure, Environmental, Fuel Tank and Firewall Sealing
SRM 51–26–00–001–001	Cleaning

Tolerance Information

LINEAR TOLERANCES		ANGULAR TOLERANCE
X.XX in. (X.X mm)	X.X in. (X mm)	±0° 30”
±0.03 in.	±0.1 in.	
±0.8 mm	±3 mm	

NOTE: The tolerances above apply to the dimensions given in this service bulletin, except when specified differently.

A. Job Set-Up

NOTE: The steps in the Job Set-Up section of this service bulletin are recommended steps. The steps give a recommendation to get access to the work area. This recommendation is to give a safe work area and to minimize possible damage to surrounding aircraft parts. Alternative steps can be used at the operator discretion.

(1) Make sure that the aircraft is in standard configuration for maintenance (refer to AMM 12–00–00–867–801).

WARNING: OBEY ALL THE SAFETY PRECAUTIONS WHEN YOU DO MAINTENANCE ON OR NEAR ELECTRICAL/ELECTRONIC EQUIPMENT. IF YOU DO NOT OBEY THE SAFETY PRECAUTIONS, INJURIES TO PERSONS AND/OR DAMAGE TO THE EQUIPMENT CAN OCCUR.

(2) Obey all the electrical/electronic safety precautions (refer to AMM 24–00–00–910–801).

(3) Remove electrical power from the aircraft (refer to AMM 24–00–00–861–802).

(4) Open, safety, and tag the circuit breakers that follow:

CB PANEL	CB NO.	NAME
CBP–1	D7	A/ICE CONT CH A

CB PANEL	CB NO.	NAME
CBP−1	K6	ACS CONT 2 CH A
CBP−1	L1	ACS CONT 1 CH A
CBP−2	J4	ACS CONT 1 CH B
CBP−2	K6	ACS R MAN
CBP−2 LOWER	T1	A/ICE CONT CH B
CBP−2 LOWER	T7	ACS CONT 2 CH B
CBP−2 LOWER	T8	ACS L MAN
CBP−2	N9	MLG BAY OVHT DET
CBP−5	A3	APU BATT CONT

(5) Remove the access panels that follow:

PANEL	NAME	REFERENCE
171AL/ 172AR	Overwing Fairing, FS697 − FS735	AMM 53−82−82−000−801
171BL/ 172BR	Overwing Fairing, FS735 − FS768	AMM 53−82−82−000−802
171CL/ 172CR	Overwing Fairing, FS768 − FS801	AMM 53−82−82−000−803
191CB/ 192CB	Forward−Fairing Access Panel	AMM 53−42−32−000−801

(6) Remove the left and right (MLG) wheel bins (refer to AMM 53−83−89−000−801).

(7) Remove and discard the left bleed air leak−detection loops (Landing Gear Bay) (refer to AMM 36−21−05−000−809).

(8) Discard the hardware that attaches dual clamps.

(9) Remove and discard the right bleed air leak−detection loops (Landing Gear Bay) (refer to AMM 36−21−07−000−811).

(10) Discard the hardware that attaches dual clamps.

(11) Remove and discard the left bleed air leak–detection loops (Wing Box) (refer to AMM 36–21–05–000–810).

(12) Discard the hardware that attaches dual clamps.

(13) Remove and discard the right bleed air leak–detection loops (Wing Box) (refer to AMM 36–21–07–000–812).

(14) Discard the hardware that attaches dual clamps.

(15) On the left and right sides, remove the ducts from FS705.35 to FS830.40+16.60 as follows:

(a) Remove the ducts from FS705.35 to FS830.40+16.60 (refer to AMM 30–11–04–000–801).

(b) Keep the support plates and the hardware that attaches the support plates.

(c) Keep the shields and the clamps that hold the shields on the ducts.

(d) Discard the ducts, coupling covers, clamps, and hardware.

NOTE: Keep the V–Band couplings.

(16) On the left and right sides, remove the duct from FS705.35 to the wing root (SS15.5) as follows:

(a) Remove the duct from FS705.35 to the wing root (SS15.5) (refer to AMM 30–11–06–000–801).

(b) Discard the duct and the clamp that holds the boot seal on the duct.

For Aircraft 19024 to 19048

Refer to Figure 10

(17) Remove and discard the boot seal (19) as follows:

(a) Remove all unwanted sealant around the boot seal (19).

(b) Remove the bolts (23) and washers (24) that hold the boot seal to the slat rib.

(c) Remove and discard the boot seal (19).

For all Aircraft

B. Procedure

NOTE: This procedure is applicable to the left and the right sides. The procedure that follows is written for the left side. The differences are given.

(1) If it is not possible to complete all the instructions in this service bulletin because of the configuration of the aircraft, speak with a representative of Bombardier in the CRC at 1−844−272−2720 (1−844−CRC−CRC0) or 1−514−855−8500 or e-mail at thd.crj@aero.bombardier.com for analysis and to get an approved disposition to complete this service bulletin.

Refer to Figure 1

(2) Remove the support tube as follows:

(a) At two locations, unlock the quick−release screws and remove the support tube from the clamps (refer to view B).

(b) Remove and discard the clamps from the support tube (refer to view C).

Refer to Figure 2

CAUTION: MAKE SURE THAT THE INSTALLED SHIELD OVERWING BLANKETS ARE NOT REMOVED AND STAY IN POSITION WHEN YOU DO THIS SERVICE BULLETIN.

(3) Between FS694.00 and FS797.00, remove the screws (21), the washers (22) and the nylon washers (20) from the standoffs and the shield overwing blankets. Discard the nylon washers (20) (refer to views B, J, and K).

(4) Between FS694.00 and FS797.00, remove the screws (21), the washers (22), the nylon washers (20), and the clamps (23) from the standoffs, the shield overwing blankets, and the exit light harness. Discard the nylon washers (20) (refer to views B, F and G).

(5) If necessary, between FS725.00 and FS762.00, near LBL45.00 and RBL45.00, remove the screw (21), the washer (22), and the clamp (23) from the bracket and the exit light harness (refer to views B and H).

(6) Between FS773.50 and FS797.00, and between LBL27.00 and RBL27.00, remove the screws (24), the washers (25), and the clamp(s) (26) from the standoffs (refer to views B and E).

NOTE: There is only one clamp (26) at some locations.

(7) At FS797.00, near LBL9.00 and RBL9.00, remove the screws (24), the washers (25), and the clamp(s) (26) from the standoffs (refer to views D and E).

NOTE: There is only one clamp (26) at some locations.

(8) At FS797.00, between BL0.00 and RBL9.00, remove the screw (27), the washer (22), the clamp (26) , and the washer (20) from the standoff. Discard the screw (27) and the washer (20) (refer to views D and M).

NOTE: It is possible that the washer (20) is not installed and that the overwing shield blanket is installed over the clamp and tube.

(9) At FS694.00, remove the two screws (21) the washers (22), and the nylon washers (20) from the standoffs and the shield overwing blankets. Discard the nylon washers (20) (refer to views C and G).

(10) At FS694.00, discard the clamp (23) (refer to view C and G).

Refer to Figure 3 , Sheet 7, view T .

(11) Install the protective blankets (14) and (15) on the upper and lower vent tubes as follows:

(a) Install the protective blanket (14) around the upper vent tube and align the Velcro tapes.

NOTE: To make the installation of the adjacent protective blanket (7) easier, it is necessary to have the protective blankets (14) and (15) tightly installed.

(b) Install the protective blanket (15) around the lower vent tube and align the Velcro tapes.

(c) Close the Velcro tapes.

Refer to Figure 3 , Sheet 5

(12) Install the protective blanket (16) on the crossover tube as follows:

(a) Install the protective blanket (16) around the two crossover tubes and align the Velcro tapes.

(b) Close the Velcro tapes.

Refer to Figure 3 , Sheet 6, view Z.

(13) Install the crossover blanket (17) on the crossover tube as follows:

(a) On the outboard side of the longeron, put the crossover blanket (17) on the crossover tube.

(b) Attach the crossover blanket to the crossover tube with the cable ties (19).

NOTE: You can use more cable ties to make the installation of the thermal blanket easier and/or to prevent waviness of the thermal blanket.

Refer to Figure 3 , Sheet 3, view H.

(14) Install the protective blanket (10) on the left and right fuel vent boot as follows:

(a) Loosen the two hose clamps installed on the fuel drain–tubes and Tygon tubes.

(b) Disconnect the two fuel drain–tubes from the Tygon tube.

(c) Remove the screw, the washer and the clamps that fasten the fuel drain–tubes to the structure.

(d) Slide the protective blanket (10) over the fuel drain–tubes.

Refer to Figure 3 , Sheet 5, view P .

(e) Put the protective blanket (10) around the fuel vent boot and align the Velcro tape.

NOTE: To make the installation of the adjacent protective blanket (3) easier, it is necessary to have the protective blanket (10) tightly installed.

(f) Close the Velcro tape.

(g) Make sure that the protective blanket (10) fully covers the fuel vent boot.

Refer to Figure 3 , Sheet 3, view H

(h) Install the screw, the washer, and the clamps on the fuel drain–tubes.

(i) Connect the fuel drain–tubes to the Tygon tubes.

(j) Tighten the clamps on the fuel drain–tubes and Tygon tubes.

Refer to Figure 3 , Sheet 7, view R .

(15) Install the protective blanket (12) on the left and right crossover tubes as follows:

(a) Install the protective blanket (12) around the crossover tube and align the Velcro tape.

NOTE: To make the installation of the adjacent protective blanket (7) easier, it is necessary to have the protective blanket (12) tightly installed.

(b) Close the Velcro tape.

(c) Make sure that the protective blanket (12) fully covers the crossover tube from the overwing surface to the inboard end of the protective blanket (12).

NOTE: On the middle section of the crossover tube, there is a space between the protective blanket (12) on the left side and the protective blanket (12) on the right side.

Refer to Figure 3 , Sheet 2, view AA

(16) Between FS762.00 and FS797.00, Install the screws (21), the washers (22), and the new washers (20) on the standoffs to fasten the shield overwing blanket to the structure.

Refer to Figure 3

(17) Temporarily install the protective blankets (3), (5), (7), and (9) on the upper surface of the wing (over the shield overwing blankets) as follows:

(a) Between FS773.50 and FS797.00, and between LBL18.00 and RBL18.00, temporarily install the protective blanket (9) on the upper surface and the aft web of the wing.

(b) Between FS762.00 and FS797.00, and between the left and right BL18.00 and BL45.00, temporarily install the protective blanket (7) on the upper surface of the wing.

NOTE: The routing of the exit light harness goes above the upper surface of the protective blanket (7).

(c) Between FS724.00 and FS762.00, and between the left and right BL27.00 and BL45.00, temporarily install the protective blanket (5) on the upper surface of the wing.

NOTE: The routing of the exit light harness goes on the upper surface of the protective blanket (5).

(d) Between FS694.00 and FS726.00, and between the left and right BL27.00 and BL45.00, temporarily install the protective blanket (3) on the upper surface and the forward web of the wing and around the crossover blanket installed in a previous step.

NOTE: The routing of the exit light harness goes below the protective blanket (3) (between the protective blanket (4) and the shield overwing blanket).

(e) Adjust and install the protective blankets (3), (5), (7), and (9) around the standoffs, fuel tubes, and adjacent structure for a correct installation.

(f) Make sure that the standoffs shown in views B, C, D, and E are inside the stitching squares.

NOTE: It is permitted to have 25% of the standoffs quantity out of the stitching square for each protective blanket.

NOTE: If a standoff is out of the stitching square, a minimum edge distance of 0.100 in. (2.5 mm) is necessary between the stitching on the perimeter of the protective blanket and the standoff.

(g) Align and close the Velcro tapes on the protective blankets (3), (5), (7), and (9).

(h) Make sure that the outboard edges of the protective blankets (3), (5), (7), and (9), are ± 1.0 in. (25 mm) from the edges of the shield overwing blankets.

(i) With a marker, make marks at location of the standoffs, on the outer surface of the protective blankets (3), (5), (7), and (9) for the installation of the screws (21) and (24) (refer to views B, C, D, V, and W).

(j) Remove the protective blankets (3), (5), (7), and (9) from the upper surface of the wing.

(18) At the marks, make a hole in the protective blankets (3), (5), (7), and (9) with a punch tool or equivalent to a diameter of 0.500 ± 0.125 in. (1.27 ± 0.32 cm).

(19) Make sure that the holes are as round as possible and there are no sharp edges.

(20) Install the protective blankets (3), (5), (7), and (9) on the upper surface of the wing (over the shield overwing blankets) as follows:

(a) Between FS773.50 and FS797.00 and RBL18.00 and LBL18.00, temporarily install the protective blanket (9) on the upper surface and the aft web of the wing.

(b) Between FS762.00 and FS797.00, and between the left and right BL18.00 and BL45.00, temporarily install the protective blanket (7) on the upper surface of the wing.

(c) Between FS724.00 and FS762.00, and between the left and right BL27.00 and BL45.00, temporarily install the protective blanket (5) on the upper surface of the wing.

(d) Between FS694.00 and FS726.00, and left and right BL27.00 and BL45.00, temporarily install the protective blanket (7) on the upper surface and the forward web of the wing.

(e) Adjust and install the protective blankets (3), (5), (7), and (9) around the standoffs, fuel tubes, and adjacent structure for a correct installation.

(f) Close the Velcro tapes.

(g) Make sure that the protective blankets (3), (7), (10), (12), (14), (15), and (16) fully cover the upper surface of the wing and the vent tubes.

(h) Make sure that the exit lights harness is routed between the two standoffs as shown in views G and H.

(i) Attach the protective blankets (3), (5), (7), and (9) to the standoffs with the screws (21), the washers (22), and the new nylon washers (20) (refer to views C, D, E, F, and H).

NOTE: The cutting views for the installation of the shield overwing blankets, the protective blankets and the hardware are shown in Details L–L and M–M.

(j) Attach the protective blankets (5) and (7) to the standoffs with the screws (21), the washers (22), the clamps (23), and the new nylon washers (20) (refer to views E, V, and W).

NOTE: The cutting views for the installation of the shield overwing blankets, the protective blankets, and the hardware are shown in Details L–L and M–M.

NOTE: The clamps (23) are installed on the exit lights harness.

(k) Install the clamp(s) (26) on the standoffs with the screws (24) and the washers (25) and the nylon washer (20) (refer to views F, and AB).

Refer to Figure 3 , Sheet 3, views F, X, and Y

(l) If the shield overwing blanket is installed over the tube and clamp (23), do as follows:

1 On the shield overwing blanket and, if necessary in the protective blanket (9), make a mark at the location of the standoff (refer to views F and Y).

NOTE: Make sure that the hole is at a minimum of 0.75 in. (19.1 mm) from the edge of the blanket.

2 At the mark, make a hole in the shield overwing blanket and, if necessary in the protective blanket (9) with a punch tool or equivalent to a diameter of 0.500 ± 0.125 in. (1.27 ± 0.32 cm).

3 Make sure that the holes are as round as possible and there are no sharp edges.

(m) Attach the shield overwing blanket and the protective blanket to the standoff with the screw (27), the washer (29), the standoff (28), the clamp (23), and the new nylon washer (20)
(refer to Sheet 3, views F and X).

NOTE: Make sure the tube and clamps (23) are installed under the shield overwing blanket and the protective blanket.

Refer to Figure 3

(n) Install the screw (21), the washer (22), and the clamp (23) to the exit lights harness and the bracket (refer to views E and U).

(o) Install the protective blanket (3) around the crossover tube
(refer to view P).

(p) Close the Velcro tape.

(q) Make sure that the protective blanket (3) fully covers the crossover tube.

For Aircraft 19024 to 19048

Refer to Figure 10

(21) Install the boot seal (19) as follows:

(a) Put the boot seal (19) in position on the slat rib. Make sure the vent flap of the boot seal (19) is down.

(b) Attach the boot seal (19) to the slat rib with the bolts (23) and the washers (24).

(c) Make a bead of high temperature, fuel resistant sealant around the boot seal (19) (refer to SRM 51−23−00).

For all Aircraft

Refer to Figure 9

(22) Put the ducts (5), (7), (9), (11) in position in the overwing area and the in the MLG bay.

Refer to Figure 9 , Sheet 1

(23) Install the duct (11) from FS705.35 to the wing root with the V–Band coupling (13), the coupling covers (15), and the clamps (18) and (21) (refer to AMM 30–11–06–400–801).

NOTE: Installation of the clamps and the sensing elements will be at a later step.

Refer to Figure 9 , Sheet 2 to Sheet 4.

(24) Install the ducts (5) (7) and (9) from FS705.35 to FS830.40+16.60 with the V–Band couplings (13) and the coupling covers (14) (refer to AMM 30–11–04–400–801).

NOTE: The coupling covers are installed on the ducts with self fusing tape in lieu of clamps.

NOTE: Installation of the clamps and the sensing elements will be at a later step.

Refer to Figure 4

(25) If necessary, add a layer(s) of the tape (43) around the duct under the clamp (3) to get a tight fit of the clamp (3) on the duct (refer to view C).

(26) Install the clamp (31) with the screw (19), the dual clamp (7), the spacer (25), the washer (28), and the nut (35) (refer to view C).

(27) If necessary, add a layer(s) of the tape (43) around the duct under the clamp (3) to get a tight fit of the clamp (3) on the duct (refer to view D).

(28) Install the clamp (31) with the screw (15), the spacer (22), the dual clamp (7), the washer (28) and the nut (35) (refer to view D).

(29) If necessary, add a layer(s) of the tape (43) around the duct under the clamp (31) to get a tight fit of the clamp (31) on the duct (refer to view E).

(30) Attach the clamp (31) to the duct with the screw (17), the dual clamp (7), the spacer (23), the washer (28), and the nut (35) (refer to view E).

(31) If necessary, add a layer(s) of the tape (43) around the duct under the clamps (31) to get a tight fit of the clamps (31) on the duct (refer to views H and K).

(32) Attach the clamp (31) to the duct with the screw (17), the dual clamp (7), the spacer (23), the washer (28), and the nut (35) (refer to view H).

(33) Attach the clamp (31) to the duct with the screw (15), the dual clamp (7), the spacer (22), the washer (28), and the nut (35) (refer to view K).

(34) If necessary, add a layer(s) of the tape (43) around the duct under the clamps (31) to get a tight fit of the clamps (31) on the duct (refer to view G).

(35) Attach the clamp (31) to the duct with the screw (20), the dual clamp (7), the spacers (25), the washer (28) and the nut (35). Make sure that the dual clamp (7) point toward the vent holes in the duct (refer to view G).

(36) Attach the clamp (31) to the duct with the screw (20), the dual clamp (7), the spacers (26), the washer (8) and the nut (35). Make sure that the dual clamp (7) point toward the vent holes in the duct (refer to view T).

(37) Install the dual clamp (7) on the bracket with the screw (11), the washer (28), and the nut (35) (refer to view R).

(38) Install the dual clamp (7) on the stand–off with the screw (10) (refer to view P).

Refer to Figure 5

(39) If necessary, add a layer(s) of the tape (43) around the duct under the clamps (31) to get a tight fit of the clamps (31) on the duct (refer to view B).

(40) Attach the clamp (31) to the duct with the screw (19), the dual clamp (7), the spacer (25), the washer (19), and the nuts (35). Make sure that the dual clamp (7) point toward the vent hole in the duct (refer to view B).

(41) If necessary, add a layer(s) of the tape (43) around the duct under the clamps (31) to get a tight fit of the clamps (31) on the duct (refer to view R).

(42) Attach the clamp (31) to the duct with the screw (18), the dual clamp (7), the spacer (24), the washer (19), and the nuts (35). Make sure that the dual clamp (7) point toward the vent hole in the duct (refer to view R).

(43) Attach the dual clamp (7) with the screw (11) the washer (28) and the nut (35) to the bracket (refer to Sheet 1, view C).

(44) If necessary, add a layer(s) of the tape (43) around the duct under the clamps (31) to get a tight fit of the clamps (31) on the duct (refer to Sheet 2, view C).

(45) Attach the two clamps (31) to the duct with the screws (15), the dual clamps (7), the spacers (22), the washers (28), and the nuts (35). Make sure that the dual clamps (7) point toward the vent holes in the duct (refer to Sheet 2, view C).

(46) If necessary, add a layer(s) of the tape (43) around the duct under the clamp (31) to get a tight fit of the clamp (31) on the duct (refer to view D).

(47) Attach the clamp (31) to the duct with the screw (17), the dual clamp (7), the spacer (23), the washer (28), and the nut (35). Make sure that the dual clamp (7) points toward the vent holes in the duct (refer to view D).

(48) Install the shrinkable sleeve (40) on the support tube as follows:

(a) Cut a piece of the shrinkable sleeve (40) to cover the length between the location of the two clamps for the installation of the support tube. (refer to views F and G).

(b) Install the shrinkable sleeve (40) on the support tube (ESPM 20−32−00).

(49) Install the support tube on the two clamps (refer to view H).

(50) Close and lock the clamps with the quick−release screws.

(51) Make sure that the shrinkable sleeve (40) does not touch the attachment clamps.

(52) At each end of the support tube at the attachment clamps (shown in view H), make sure that you cannot see more than 0.25 in. (6.4 mm) of the surface of the bare support tube.

(53) At approximately 2.23 in. (56.6 mm) from the inboard coupling cover, put the clamp (31) on the duct (refer to view M).

(54) If necessary, add a layer(s) of the tape (43) around the duct under the clamp (31) to get a tight fit of the clamp (31) on the duct (refer to views E and M).

(55) Put the clamp (30) on the support tube in line with the clamp (31) (refer to view E).

(56) Attach the clamp (30) to the clamp (31) with the screw (13), the two washers (28), and the nut (35).

(57) Install the clamps (32) on the support tube as follows (refer to view M):

(a) Install the inboard clamp (32) at approximately 4.96 in. (125.9 mm) from the clamp (31) with the screw (12), the dual clamp (7), washer (28), and the nut (35) (refer to views J and M).

(b) Install the clamp (32) at approximately 0.52 in. (13.2 mm) outboard of clamp (31) with the screw (14), the dual clamp (7), the spacer (22), the washer (28), and the nut (35) (refer to views K and M).

(c) Install the clamp (32) at approximately 7.25 in. (184.2 mm) outboard of clamp (31) with the screw (12), the dual clamp (7), washer (28), and the nut (35) (refer to views J and M).

(d) Make sure that the dual clamps (7) point toward the aft surface of the support tube.

(58) Install the clamp (32) on the outboard end of the support tube as follows (refer to view N):

(a) Install the clamp (32) at 3.35 in. (85.1 mm) from the lower surface of the support tube.

(b) Attach the clamp (32) on the support tube with the screw (12), the dual clamp (7), the washer (28), and the nut (35) (refer to view L).

(c) Make sure that the dual clamp (7) points toward the aft surface of the support tube.

(59) Install the clamps (32) on the support tube as follows (refer to views A and P):

(a) Install the clamp (32) at 2.57 in. (65.3 mm) from the lower surface of the support tube with the screw (12), the dual clamp (7), the washer (28), and the nut (35).

(b) Install the clamp (32) at 3.60 in. (91.4 mm) from the aft surface of the support tube with the screw (12), the dual clamp (7), the washer (28), and the nut (35).

NOTE: You can install the dual clamp (7) on the inboard or outboard side of the support tube.

Refer to Figure 6

(60) Obey the bleed–air leak–detection elements and components maintenance practices (AMM 36–21–00–910–801).

NOTE: The notes and the procedures in this service bulletin can not agree with all maintenance practices shown in AMM 36–21–00–910–801. At some locations, the permitted distance between the attachment supports of the bleed–air leak–detection elements is longer than the distance shown in the maintenance practices. When differences are found, the procedures and the notes of this service bulletin must be obeyed.

(61) Do a Resistance and Conductance Test of the sensing elements (4) and (5) (refer to AMM 36–21–00–760–801).

(62) Fill each end of the left and right inboard and outboard bulkhead electrical–connectors with electrical insulating compound (refer to AMM 36–21–00–910–801).

(63) Fill the end of electrical connectors MT156P1, MT155P2, MT165P2, and MT166P1 with electrical insulating compound (refer to AMM 36–21–00–910–801).

(64) Make sure that the electrical identification decals are installed at the connection points of the sensing elements.

(65) Fill each end of the sensing elements (4) and (5) with electrical insulating compound (refer to AMM 36–21–00–910–801).

Refer to Figure 7

(66) From FS773.50 to FS677.00, put the new sensing elements (5) in position along the duct as follows:

NOTE: On a straight length of sensing element, the distance between each dual clamp is 8 in. (20 cm) maximum. If a conduit and a cable tie are installed in a middle position between two dual clamps, it is permitted to have a distance of more than 8 in. (20 cm) and less than 13 in. (33 cm) between each dual clamp. The installation of the conduit and the cable tie does not change the hardware installation requirements of this service bulletin.

NOTE: Where the sensing elements change direction, it is permitted to have more than 6 in. (15 cm) between two dual clamps, if the other instructions given in AMM 36–21–00–910–801 are obeyed.

NOTE: It is permitted to have more than 4 in. (10 cm) between a connector of the sensing element and a dual clamp, if the other standard instructions in AMM 36–21–00–910–801 are obeyed.

NOTE: The distance between the dual clamps are measured linearly from screw to screw, or screw to grommet.

(a) Put the sensing elements (5) along the duct from the bracket above the overwing to the bracket at the leading edge.

(b) Adjust the sensing elements (5) equally along all the dual clamps (7).

(c) Make sure the sensing elements do not cross over each other.

(d) Make sure the sensing elements (5) are visually aligned with the center of the vent holes on the ducts.

Refer to Figure 8

(67) From FS773.50 to FS847.00, put the new sensing elements (4) along the duct as follows:

NOTE: On a straight length of sensing element, the distance between each dual clamp, or dual clamp and grommet is 8 in. (20 cm) maximum. If a conduit and a cable tie are installed in a middle position, it is permitted to have a distance between each dual clamp of more than 8 in. (20 cm) and less than 13 in. (33 cm) between two dual clamps. The installation of the conduit and the cable tie does not change the hardware installation requirements of this service bulletin.

NOTE: Where the sensing elements change direction, it is permitted to have more than 6 in. (15 cm) between two dual clamps, if the other instructions given AMM 36–21–00–910–801 are obeyed.

NOTE: It is permitted to have more than 4 in. (10 cm) between a connector of the sensing element and a dual clamp, if the other standard instructions in AMM 36–21–00–910–801 are obeyed.

NOTE: The distance between the dual clamps are measured linearly from screw to screw, or screw to grommet.

(a) Put the sensing elements (4) in position through the support (refer to Sheet 2, view E.

(b) Put the sensing elements (4) along the duct from the bracket to the bulkhead.

(c) Adjust the sensing elements (4) equally along all the dual clamps (7).

(d) Make sure the sensing elements do not cross over each other.

(e) Make sure the sensing elements (4) are visually aligned with the center of the vent holes on the ducts.

Refer to Figure 7

(68) At the leading edge, connect the new sensing elements (5) to electrical connectors MT156P1, MT155P2, MT165P2, and MT166P1 as follows:

CAUTION: THE CERAMIC INSERT IS EASILY DAMAGED. WHEN YOU ATTACH THE ELECTRICAL CONNECTOR AND THE SENSING ELEMENT, BE CAREFUL NOT TO DAMAGE THE CERAMIC INSERT. THIS CAN CAUSE A MALFUNCTION OF THE BLEED−AIR LEAK DETECTION SYSTEM.

CAUTION: WHEN YOU ATTACH THE ELECTRICAL CONNECTOR AND THE SENSING ELEMENT TOGETHER, MAKE SURE THE POSITION OF THE PIN INSIDE THE SENSING ELEMENT IS NOT BETWEEN THE CERAMIC INSERT AND THE ELECTRICAL CONNECTOR BODY. THIS CAN CAUSE DAMAGE TO THE CERAMIC INSERT AND A MALFUNCTION OF THE BLEED−AIR LEAK DETECTION SYSTEM.

(a) Connect the sensing elements (5) to electrical connectors MT156P1 and MT166P1.

(b) Remove the unwanted electrical insulating compound from the work area
(SRM 51−26−00−001−001)..

(c) Torque the sensing elements (5) connected to electrical connectors MT156P1 and MT166P1 to 50−60 lbf•in (5.6 and 6.8 N•m).

(d) Safety electrical connectors MT156P1 and MT166P1, the sensing elements (5), and the nuts with lockwire or safety cables
(AMM 20−51−00−400−802) or (AMM 20−51−00−400−807).

(e) Attach the sensing element (5) (MT155P2 and MT165P2) to the brackets as follows (refer to view D):

1 Make sure that the electrical bonding is satisfactory
(AMM 51−80−00−760−802).

2 Attach the sensing elements (5) to the brackets with the washers (29) and the nuts (34).

3 Torque the nuts (34) to 50–60 lbf•in (5.6 and 6.8 N•m).

(f) Connect electrical connectors MT155P2 and MT165P2 and the sensing elements (5) together.

(g) Remove the unwanted electrical insulating compound from the work area
(SRM 51–26–00–001–001).

(h) Torque electrical connectors MT155P2 and MT165P2 connected to the sensing elements (5) to 50–60 lbf•in (5.6 and 6.8 N•m).

(i) Safety electrical connectors MT155P2 and MT165P2, the sensing elements (5), and the nuts (34) with lockwire or safety cables (AMM 20–51–00–400–802) or (AMM 20–51–00–400–807).

(j) Apply fillet sealant around the washers (29) and the nuts (34) (refer to SRM 51–23–00–001–001).

Refer to Figure 8

(69) At the bulkhead, connect the new sensing elements (4) to the inboard and outboard electrical connectors as follows (refer to view B):

CAUTION: WHEN YOU ATTACH THE ELECTRICAL CONNECTOR AND THE SENSING ELEMENT TOGETHER, MAKE SURE THE POSITION OF THE PIN INSIDE THE SENSING ELEMENT IS NOT BETWEEN THE CERAMIC INSERT AND THE ELECTRICAL CONNECTOR BODY. THIS CAN CAUSE DAMAGE TO THE CERAMIC INSERT AND A MALFUNCTION OF THE BLEED–AIR LEAK DETECTION SYSTEM.

CAUTION: THE CERAMIC INSERT IS EASILY DAMAGED. WHEN YOU ATTACH THE ELECTRICAL CONNECTOR AND THE SENSING ELEMENT, BE CAREFUL NOT TO DAMAGE THE CERAMIC INSERT. THIS CAN CAUSE A MALFUNCTION OF THE BLEED–AIR LEAK DETECTION SYSTEM.

(a) Connect the sensing elements (4) to the inboard electrical connectors.

(b) Remove the unwanted electrical insulating compound from the work area (refer to SRM 51–26–00–001–001).

(c) Torque the sensing elements (4) connected to the inboard electrical connectors to 50–60 lbf•in (5.6 and 6.8 N•m).

(d) Safety the inboard electrical connectors and sensing elements (4) and the nuts with lockwire or safety cables
(refer to AMM 20–51–00–400–802 or AMM 20–51–00–400–807).

(e) Connect the sensing elements (4) to the outboard electrical connectors.

(f) Remove the unwanted electrical insulating compound from the work area (refer to SRM 51–26–00–001–001).

(g) Torque the sensing elements (4) connected to the outboard electrical connectors to 50–60 lbf•in (5.6 and 6.8 N•m).

(h) Safety the outboard electrical connectors and the sensing elements (4) with lockwire or safety cables
(refer to AMM 20–51–00–400–802 or AMM 20–51–00–400–807).

(i) Apply fillet sealant around the inboard and outboard electrical connectors (refer to SRM 51–23–00–001–001).

(70) At the bracket, connect the new sensing elements (5) to the new sensing elements (4) as follows (refer to view C):

CAUTION: WHEN YOU ATTACH THE ELECTRICAL CONNECTOR AND THE SENSING ELEMENT TOGETHER, MAKE SURE THE POSITION OF THE PIN INSIDE THE SENSING ELEMENT IS NOT BETWEEN THE CERAMIC INSERT AND THE ELECTRICAL CONNECTOR BODY. THIS CAN CAUSE DAMAGE TO THE CERAMIC INSERT AND A MALFUNCTION OF THE BLEED–AIR LEAK DETECTION SYSTEM.

CAUTION: THE CERAMIC INSERT IS EASILY DAMAGED. WHEN YOU ATTACH THE ELECTRICAL CONNECTOR AND THE SENSING ELEMENT, BE CAREFUL NOT TO DAMAGE THE CERAMIC INSERT. THIS CAN CAUSE A MALFUNCTION OF THE BLEED–AIR LEAK DETECTION SYSTEM.

(a) Attach the sensing elements (4) and (5) to the bracket as follows:

1 Make sure that the electrical bonding is satisfactory
(refer to AMM 51–80–00–760–802).

2 Install the sensing element (4) in the outboard hole of the bracket with the washer (29) and the nut (34).

3 Install the sensing element (5) in the inboard hole of the bracket with the washer (29) and the nut (34).

4 Torque the nuts (34) to 50–60 lbf•in (5.6 and 6.8 N•m).

(b) Connect the sensing elements (4) and (5) together.

(c) Remove the unwanted electrical insulating compound from the work area (refer to SRM 51–26–00–001–001).

(d) Torque the sensing elements (4) connected to the sensing elements (5) to 50–60 lbf•in (5.6 and 6.8 N•m).

(e) Safety the sensing elements (4) and (5) and the nuts (34) with lockwire or safety cables
(refer to AMM 20–51–00–400–802 or AMM 20–51–00–400–807).

(f) Apply fillet sealant around the washers (29) and the nuts (34)
(refer to SRM 51–23–00–001–001).

Refer to Figure 7

(71) Put the grommets (8) on the sensing elements (5) in line with the dual clamps (7).

(72) Close and lock the dual clamps (7) with the quick–release screws.

(73) At eight locations, install the conduit (39) with the cable tie (37) on the sensing elements (5) (refer to views E, G, R and X).

(74) Cut and discard the unwanted part of the cable tie (37).

(75) Make sure that on a straight length of sensing elements, the distance between each dual clamp is 8 in. (20 cm) maximum.

NOTE: If a conduit and a cable tie are installed in a middle position between two dual clamps, it is permitted to have a distance between each dual clamp of more than 8 in. (20 cm) and less than 13 in. (33 cm). The installation of the conduit and the cable tie does not change the hardware installation requirements of this service bulletin.

NOTE: Between FS752.50 and FS773.50, it is permitted to have a distance of more than 8 in. (20 cm) and less than 13 in. (33 cm) between each dual clamp, without the installation of a conduit and a cable tie between the two sensing element (refer to view W).

NOTE: The distance between the dual clamps are measured linearly from screw to screw, or screw to grommet.

(76) If necessary, adjust the position of the sensing elements (5) to make sure that they point toward the vent holes in the ducts.

(77) Make sure that the distances between the sensing elements (5) and the adjacent structure or components are as follows (refer to view L–L):

(a) The distance between the outboard sensing elements (5) and the bracket is 0.25 in. (6.4 mm) minimum.

(b) The distance between the inboard sensing elements (5) and the bracket is 0.41 in. (10.4 mm) minimum.

(c) The distance between the outboard sensing element (5) and the duct is 0.79 in. (20.1 mm) minimum.

(d) The distance between the inboard sensing element (5) and the duct is 0.72 in. (18.3 mm) minimum.

(78) Near the fuel vent boot, make sure that the distances between the inboard sensing element (5) and the longeron is 0.25 in. (6.3 mm) minimum (refer to view N–N).

(79) Near FS752.00, make sure that the distance between the sensing element (5) and the adjacent fitting are 0.40 in. (10.1 mm) minimum (refer to view Z).

(80) Make sure that the distance between the sensing elements and the adjacent systems or brackets is 0.50 in. (12.7 mm) minimum, unless otherwise specified in this service bulletin.

(81) At the clamping postitions, make sure that the distance between the sensing elements and support brackets is 0.25 in. (6.3 mm) minimum, unless otherwise specified in this service bulletin.

(82) Make sure that the distance between the sensing elements (5) and the ducts, coupling covers, and bellows is between 1.0 in. (25 mm) and 2.0 in. (51 mm) maximum. If this is not possible, a minimum of 0.85 in. (21.6 mm) is necessary, unless otherwise specified in this service bulletin.

Refer to Figure 8

(83) Put the grommets (8) on the sensing elements (4) in line with the dual clamps (7).

(84) Close and lock the dual clamps (7) with the quick–release screws.

(85) Put the grommet (6) on the sensing elements (4) and the support (refer to view E).

(86) On the right side, inboard of the support tube, install the conduit (39) with the cable tie (37) on the sensing elements (4) (refer to view W).

(87) Cut and discard the unwanted part of the cable tie (37).

(88) On the left side, outboard of the support tube, install the conduit (39) with the cable tie (37) on the sensing elements (4) (refer to view P).

(89) Cut and discard the unwanted part of the cable tie (37).

(90) Make sure that on a straight length of sensing elements, the distance between each dual clamp is 8 in. (20 cm) maximum.

NOTE: If a conduit and a cable tie are installed in a middle position between two dual clamps, it is permitted to have a distance between each dual clamp of more than 8 in. (20 cm) and less than 13 in. (33 cm). The installation of the conduit and the cable tie does not change the hardware installation requirements of this service bulletin.

NOTE: The distance between the dual clamps are measured linearly from screw to screw.

(91) If necessary, adjust the position of the sensing elements (4) to make sure that they point toward the vent holes in the ducts.

(92) Make sure that the distances between the sensing elements and the support tube is 0.14 in. (3.6 mm) (refer to view R).

(93) Make sure that the distance between the sensing elements (4) and the brackets is 0.25 in. (6.4 mm) minimum, unless otherwise specified in this service bulletin.

(94) Make sure that the distance between the sensing elements (4) and the ducts, coupling covers, and bellows is between 1.0 in. (25 mm) and 2.0 in. (51 mm) maximum. If this is not possible, a minimum of 0.85 in. (21.6 mm) is necessary.

(95) Make sure that the sensing elements (4) do not touch the protective blankets.

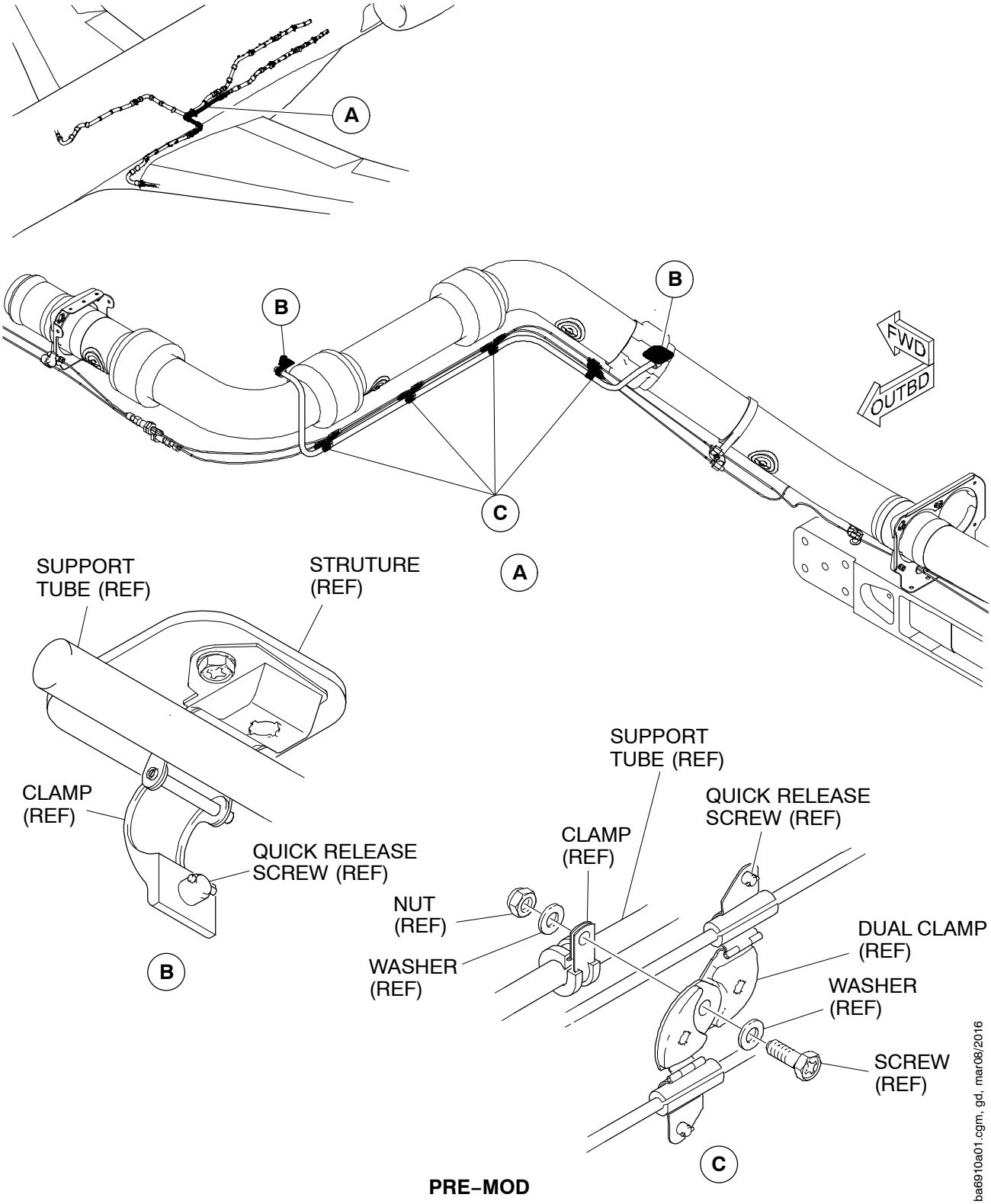

PRE–MOD

Removal of the Support Tube (MLG Bay Area)
Figure 1

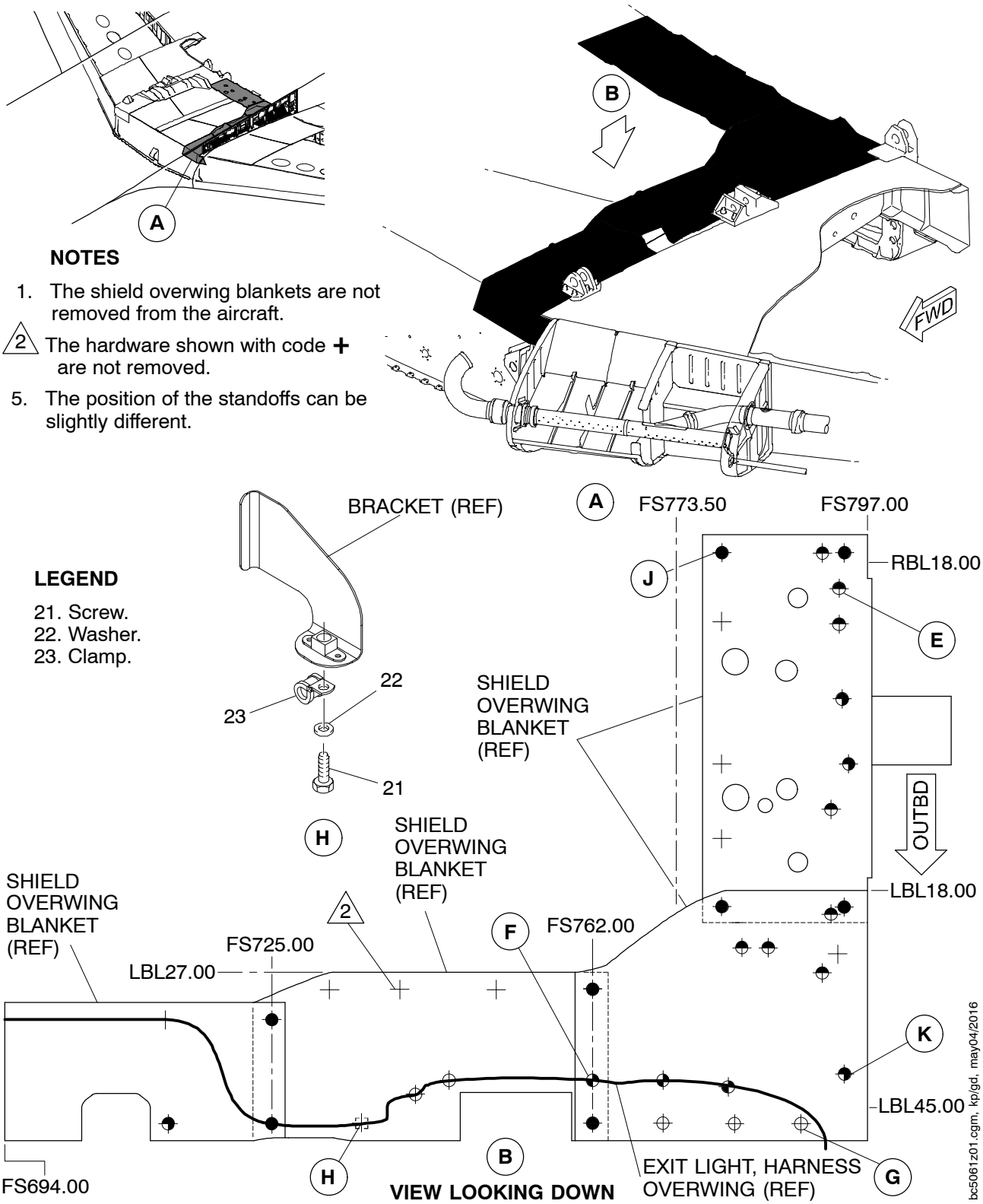

NOTES

1. The shield overwing blankets are not removed from the aircraft.

2 The hardware shown with code **+** are not removed.

5. The position of the standoffs can be slightly different.

Removal of the Hardware from the Shield Overwing Blankets
Figure 2 (Sheet 1 of 2)

NOTES

3 One or two clamps is/are installed.

4 The shield overwing blankets are not shown for clarity.

6 It is possible that the washer (20) is not installed and that the overwing shield blanket is installed over the clamp and tube.

7 Right hand side only.

LEGEND

20. Washer, nylon
21. Screw.
22. Washer.
23. Clamp.
24. Screw.
25. Washer.
26. Clamp.
27. Screw.

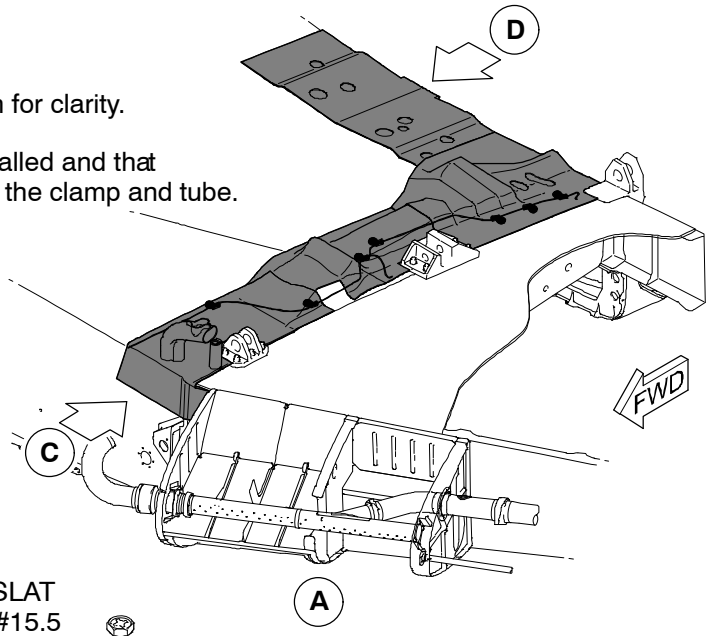

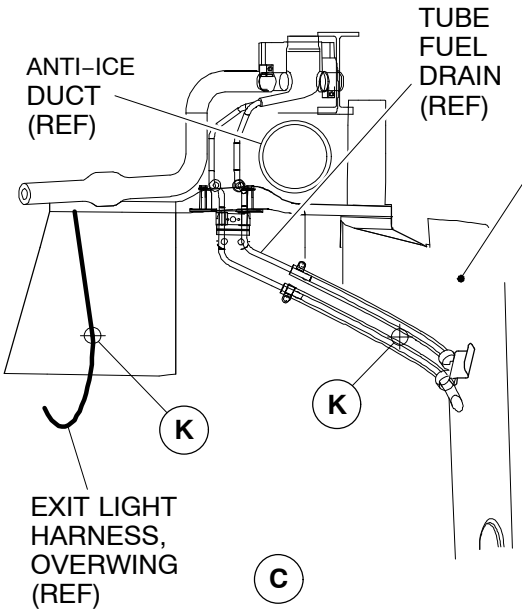

VIEW LOOKING AFT

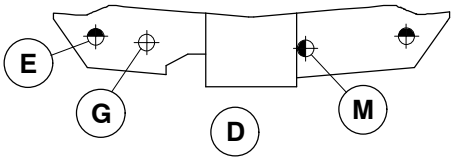

VIEW LOOKING FORWARD

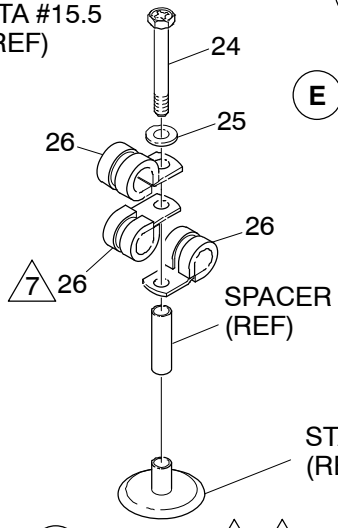

E TYPICAL 3 4

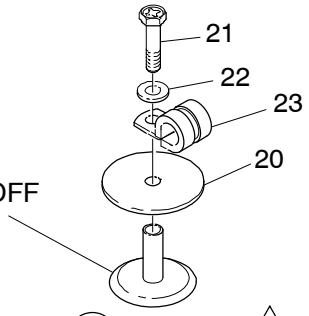

F TYPICAL 4

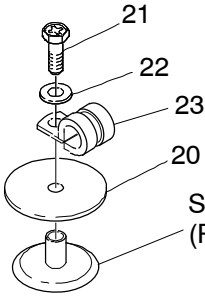

G TYPICAL 4

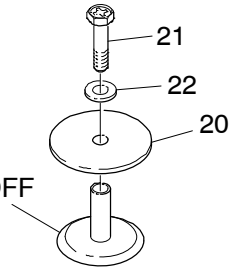

J TYPICAL 4

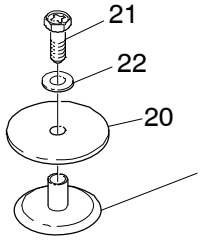

K TYPICAL 4

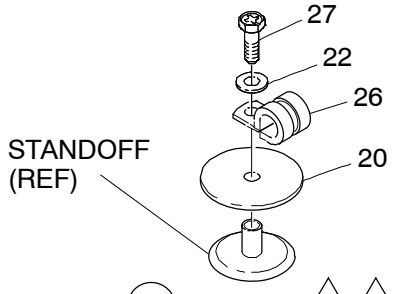

M TYPICAL 4 6

bc5061z02.cgm, kp/gd, may04/2016

Removal of the Hardware from the Shield Overwing Blankets
Figure 2 (Sheet 2 of 2)

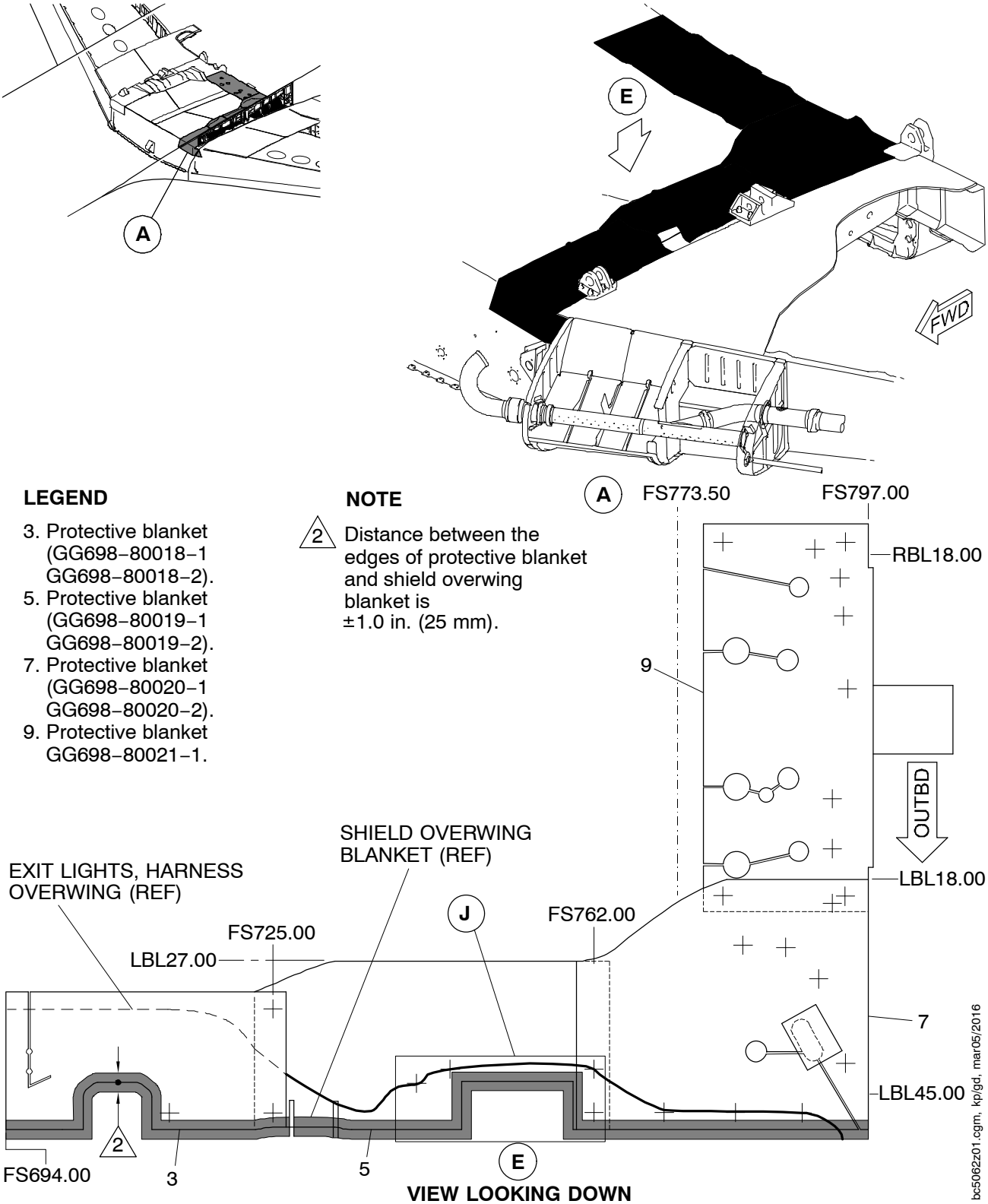

LEGEND

3. Protective blanket (GG698–80018–1 GG698–80018–2).
5. Protective blanket (GG698–80019–1 GG698–80019–2).
7. Protective blanket (GG698–80020–1 GG698–80020–2).
9. Protective blanket GG698–80021–1.

NOTE

2 Distance between the edges of protective blanket and shield overwing blanket is ±1.0 in. (25 mm).

VIEW LOOKING DOWN

Installation of the Protective Blankets
Figure 3 (Sheet 1 of 8)

NOTES

△3 One or two clamps is/are installed.

△6 The blankets are not shown on these views. The location of the blankets are shown on Details K–K, L–L and M–M.

7. The position of the standoff can be slightly different.

8. The new protective blankets are installed over the hardware at the locations identified with symbol +.

△9 The hardware is installed to fasten the existing shield overwing blanket. The new protective blanket is installed over the hardware.

LEGEND

20. Washer B0202026U1348–80.
21. Screw.
22. Washer.
23. Clamp.
24. Screw.
25. Washer.
26. Clamp.

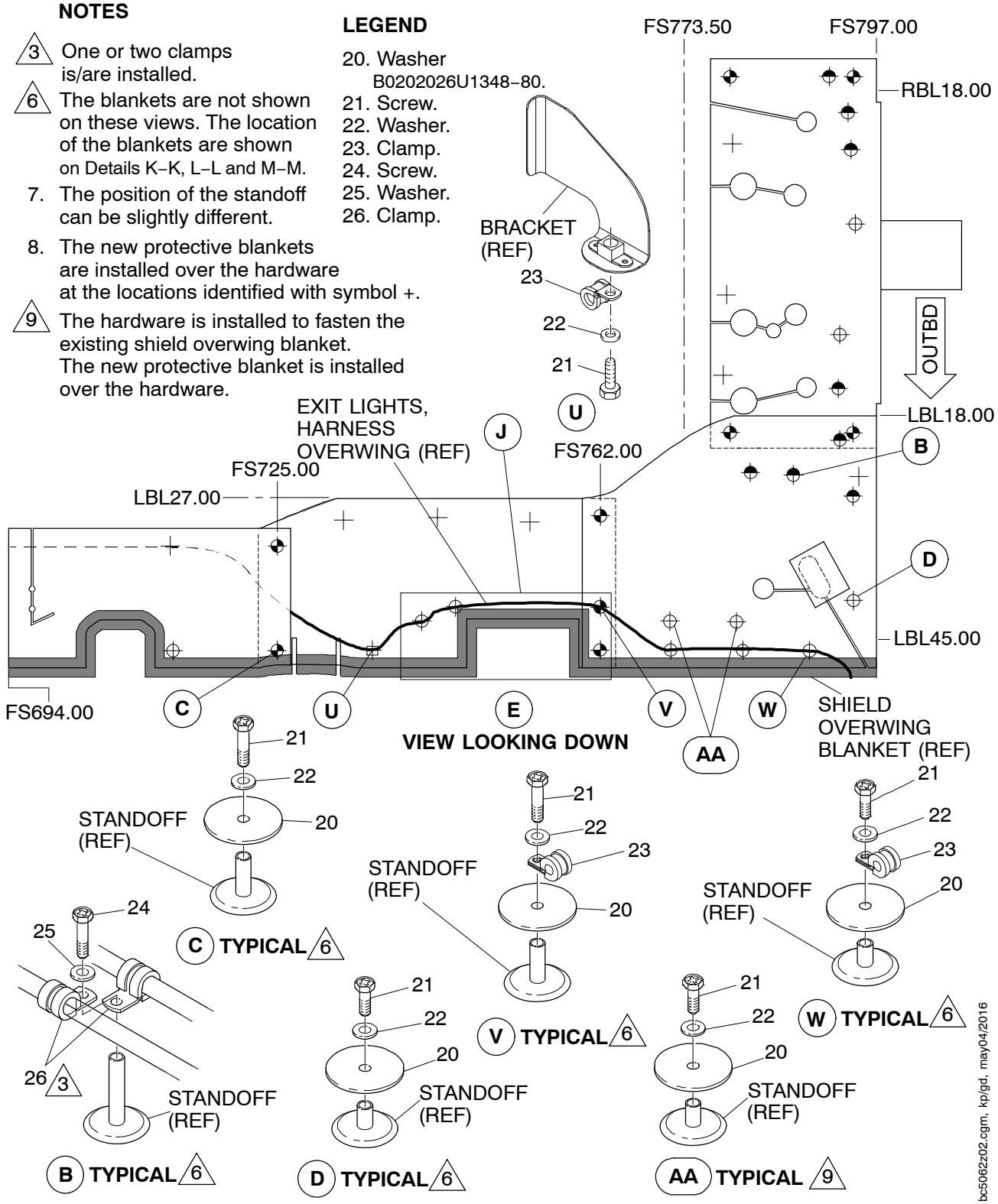

Installation of the Protective Blankets
Figure 3 (Sheet 2 of 8)

LEGEND

3. Protective blanket GG698–80018–1 (GG698–80018–2).
9. Protective blanket GG698–80021–1.
10. Protective blanket GG698–80022–1 (GG698–80022–2).
20. Washer, nylon B0202026U1348–80.
23. Clamp.
24. Screw.
25. Washer.
26. Clamp.
27. Screw NAS1801–3–25.
28. Spacer NAS43DD3–76N.
29. Washer.

NOTE

△3 Two or three clamps are installed.

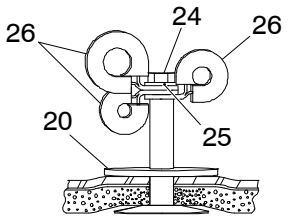

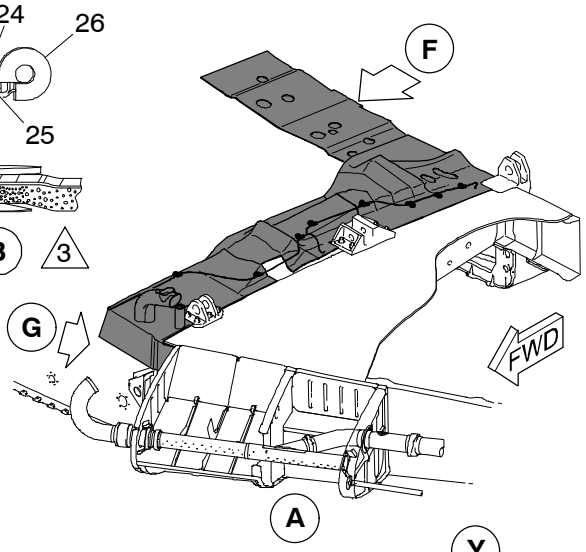

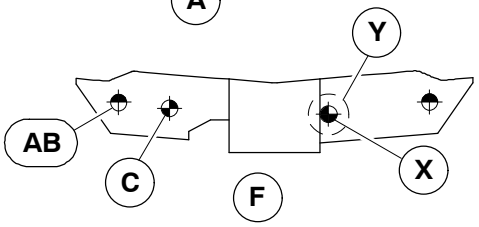

VIEW LOOKING FORWARD

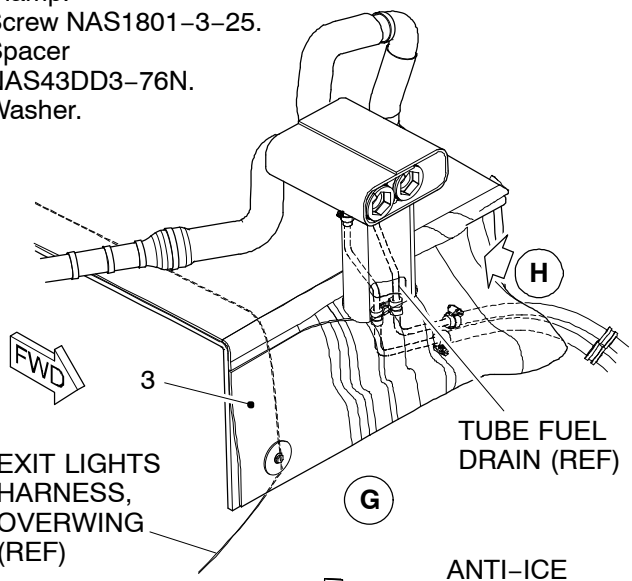

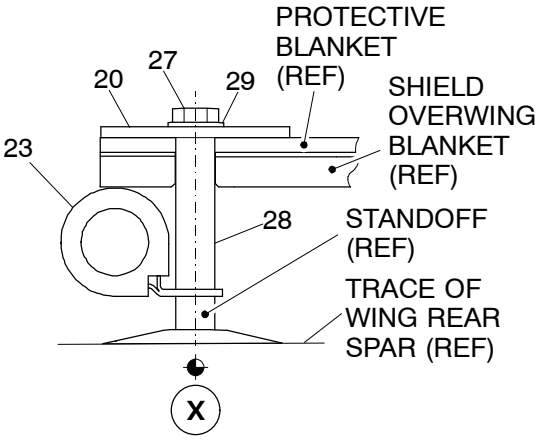

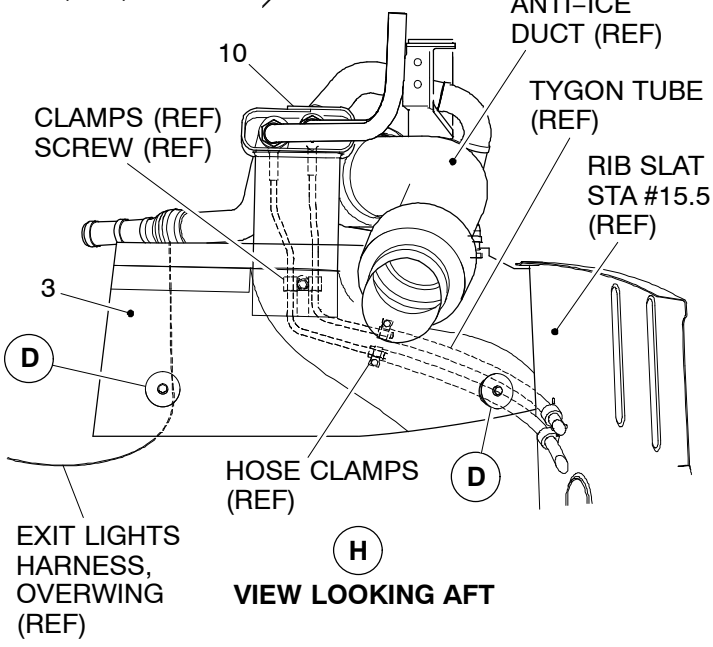

VIEW LOOKING AFT

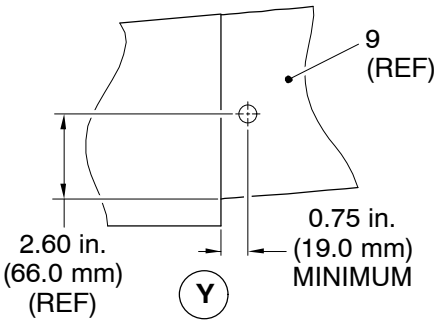

bc5062z03.cgm, kp/gd, may04/2016

Installation of the Protective Blankets
Figure 3 (Sheet 3 of 8)

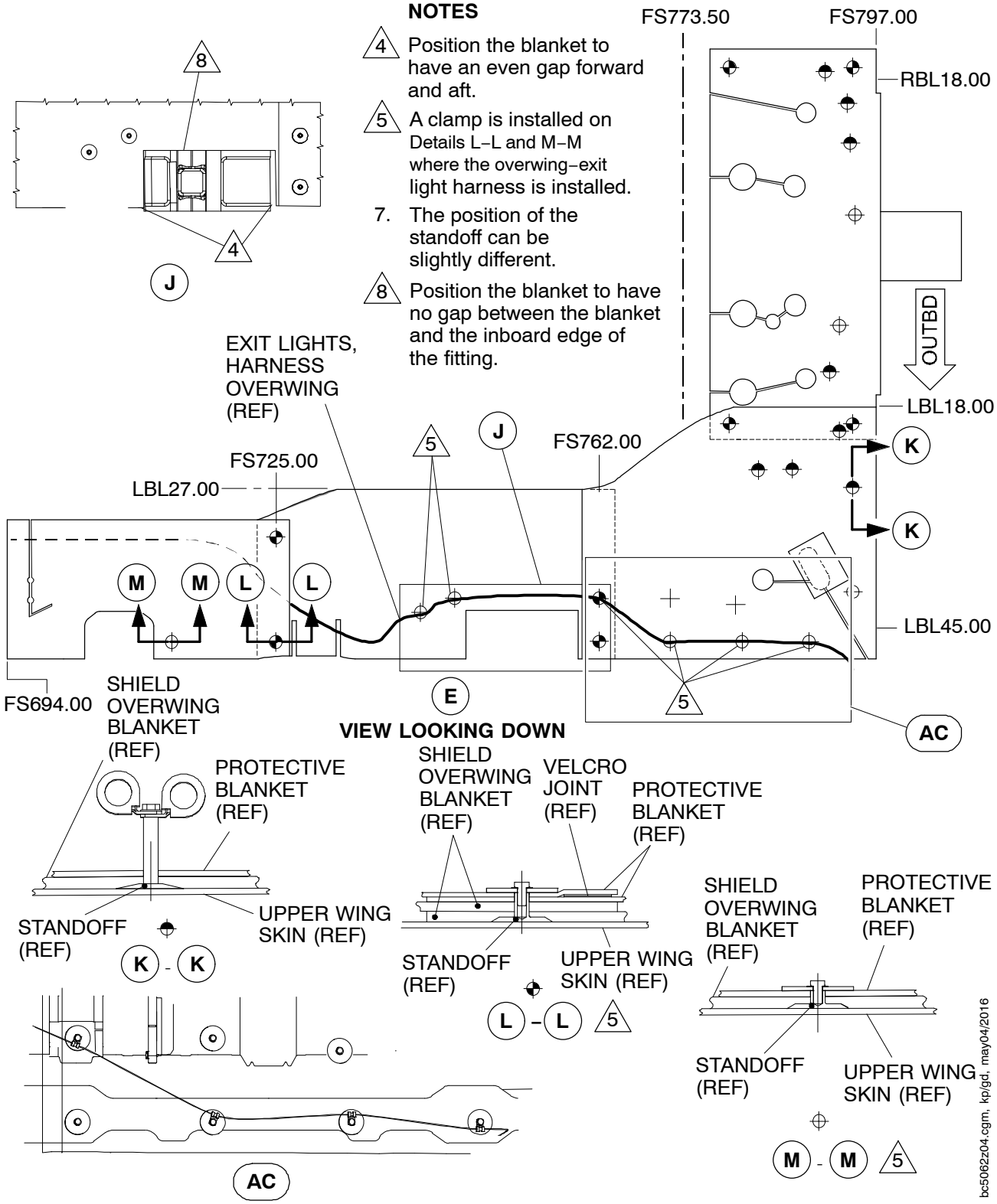

Installation of the Protective Blankets
Figure 3 (Sheet 4 of 8)

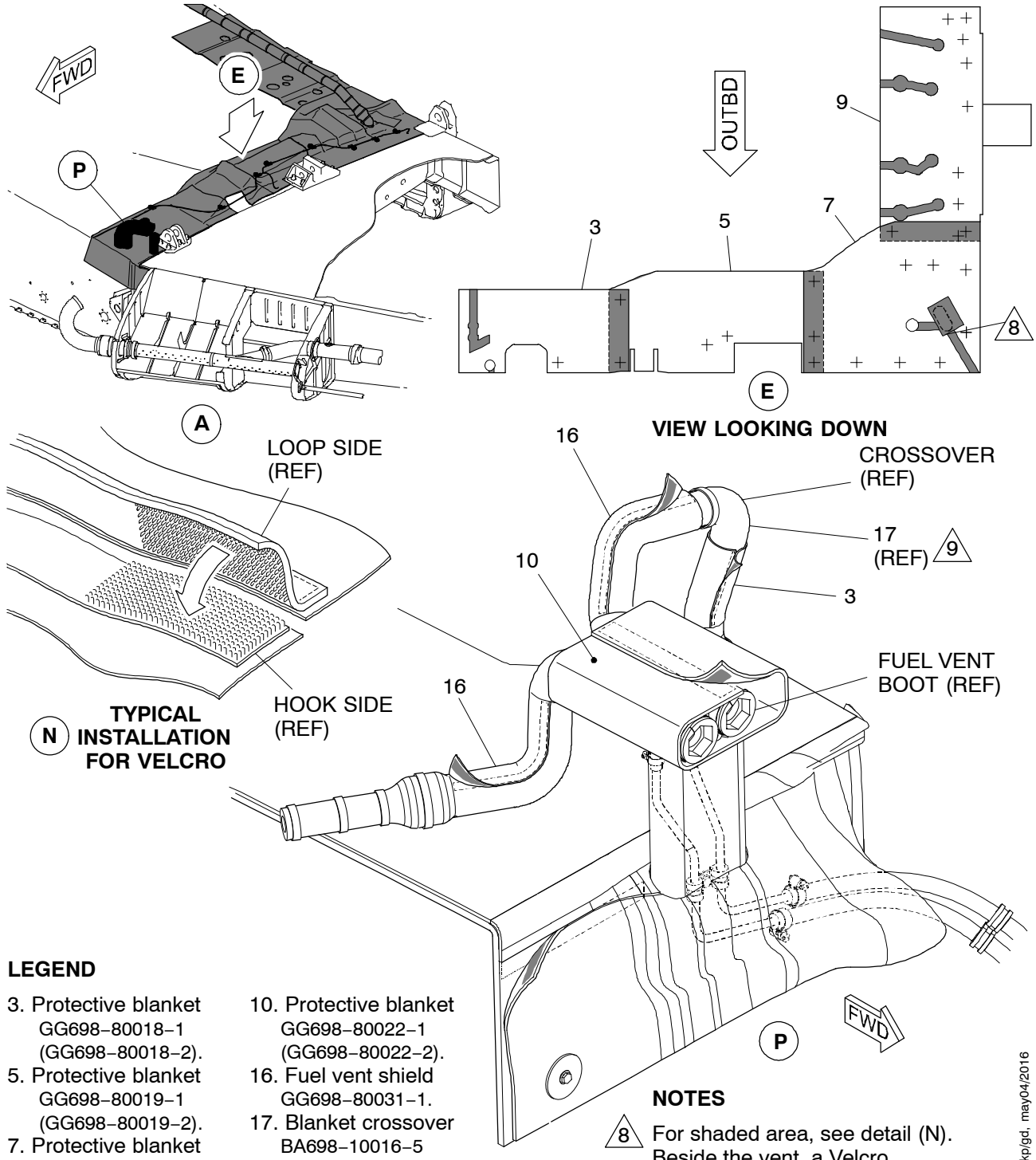

LEGEND

3. Protective blanket GG698–80018–1 (GG698–80018–2).
5. Protective blanket GG698–80019–1 (GG698–80019–2).
7. Protective blanket GG698–80020–1 (GG698–80020–2).
9. Protective blanket GG698–80021–1.
10. Protective blanket GG698–80022–1 (GG698–80022–2).
16. Fuel vent shield GG698–80031–1.
17. Blanket crossover BA698–10016–5 (BA698–10016–6).

NOTES

8 For shaded area, see detail (N). Beside the vent, a Velcro square is not used.

9 The protective blanket (3) is installed over the blanket crossover (17).

bc5062z05.cgm, kp/gd, may04/2016

Installation of the Protective Blankets
Figure 3 (Sheet 5 of 8)

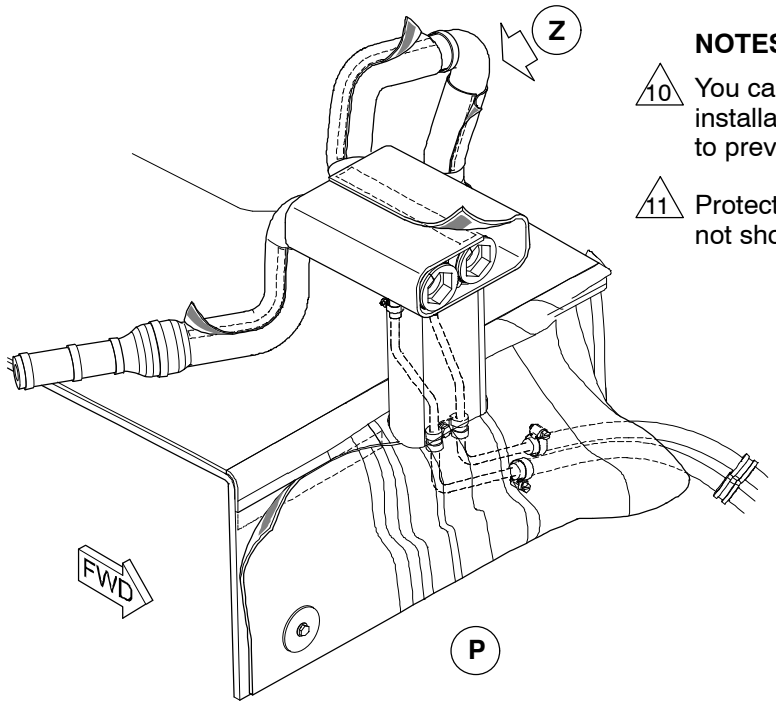

NOTES

10 You can use more cable ties to make the installation of the thermal blanket easier and/or to prevent waviness of the thermal blanket.

11 Protective blanket P/N GG698–80018–1 not shown for clarity.

LEGEND

17. Blanket crossover BA698–10016–5 (BA698–10016–6).
19. Cable tie B0816019–005. 10

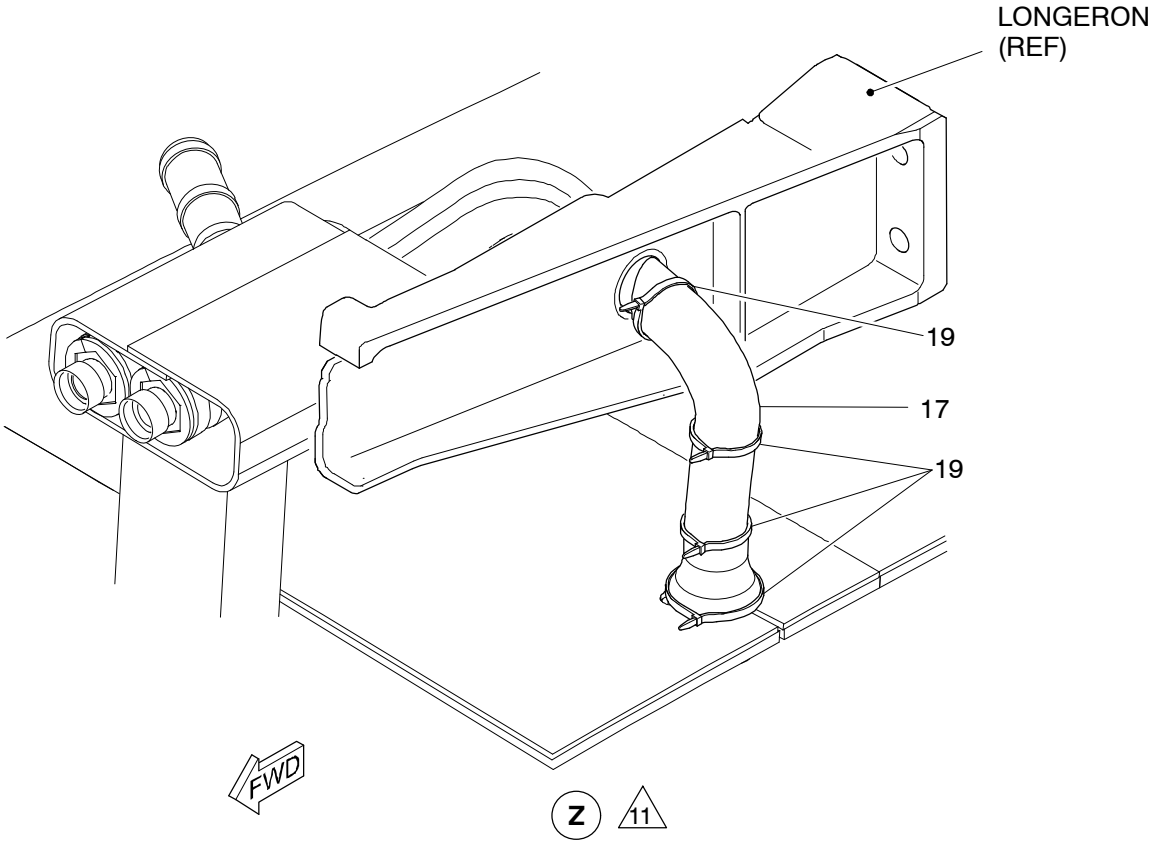

bc5062z08, kp, Apr. 11, 2016

Installation of the Protective Blankets
Figure 3 (Sheet 6 of 8)

NOTES

For shaded area, see detail (N).

9. When the protective blanket (12) is installed, the crossover tube cannot be seen from the overwing surface to the end of the protective blanket (12). On the middle section of the crossover tube, there is a space between the protective blanket (12) on the left side and the protective blanket (12) on the right side.

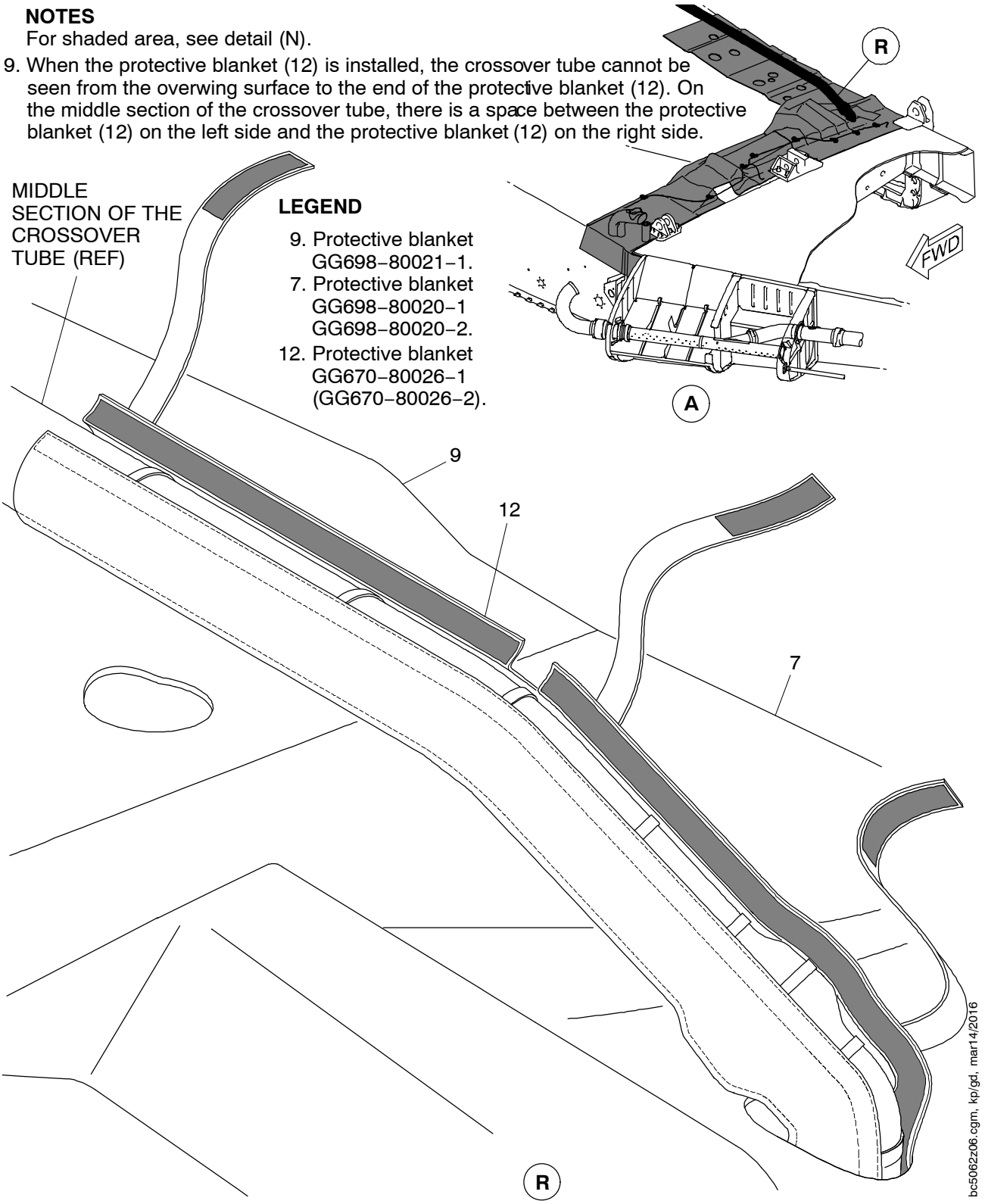

Installation of the Protective Blankets
Figure 3 (Sheet 7 of 8)

NOTES

1. For shaded area, see detail (N).

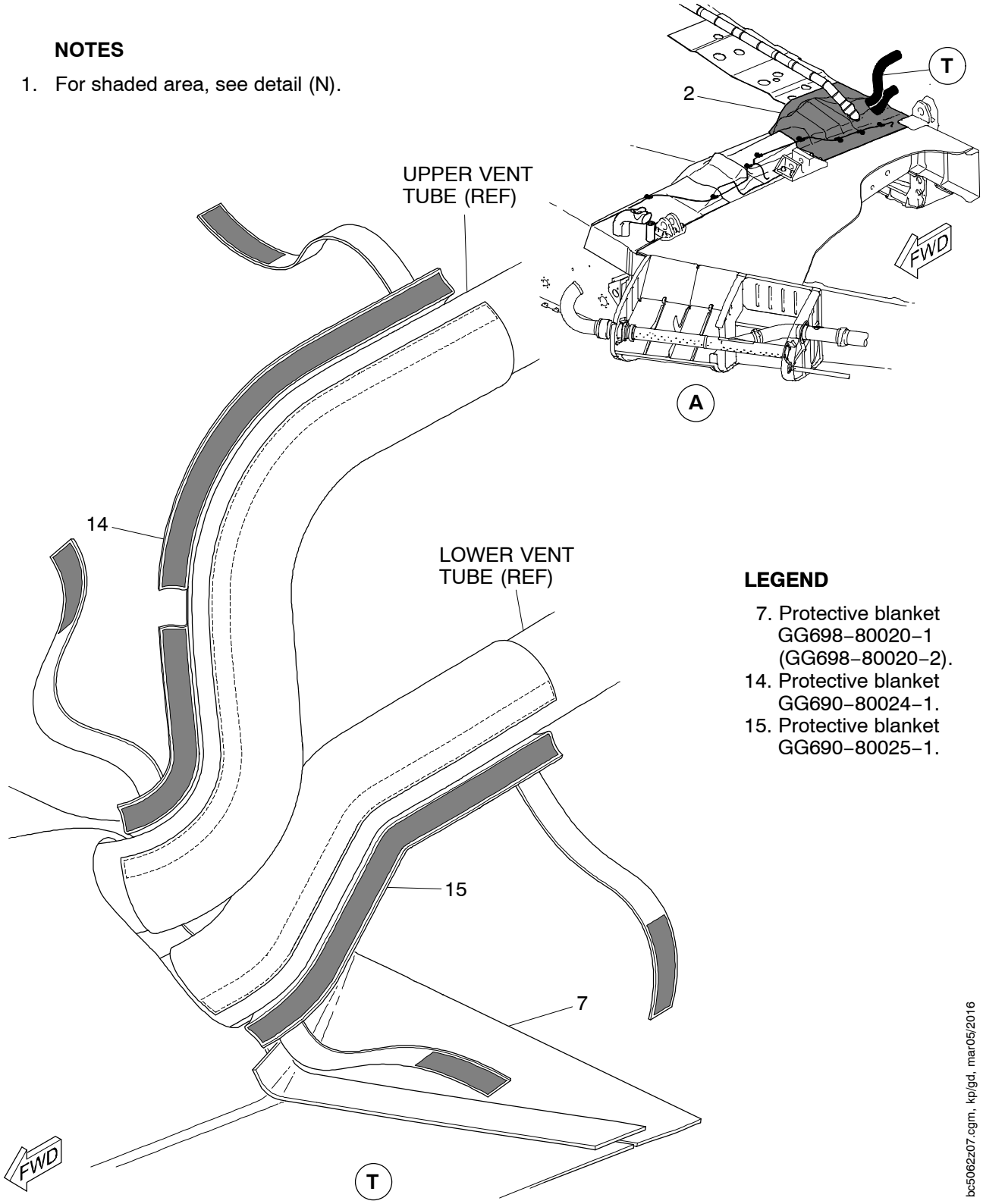

LEGEND

7. Protective blanket GG698–80020–1 (GG698–80020–2).
14. Protective blanket GG690–80024–1.
15. Protective blanket GG690–80025–1.

bc5062z07.cgm, kp/gd, mar05/2016

Installation of the Protective Blankets
Figure 3 (Sheet 8 of 8)

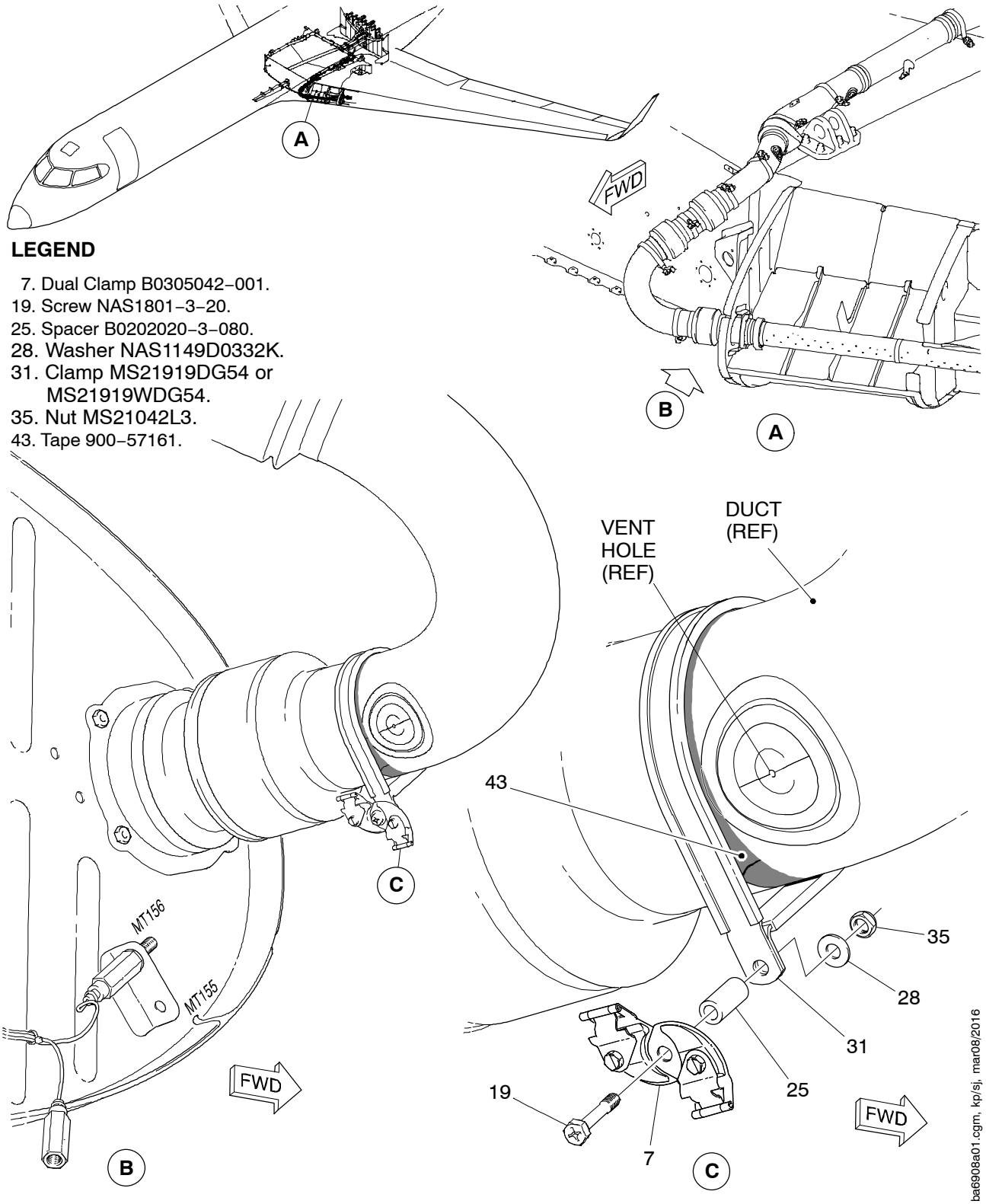

Installation of the New Hardware (Overwing Area)
Figure 4 (Sheet 1 of 4)

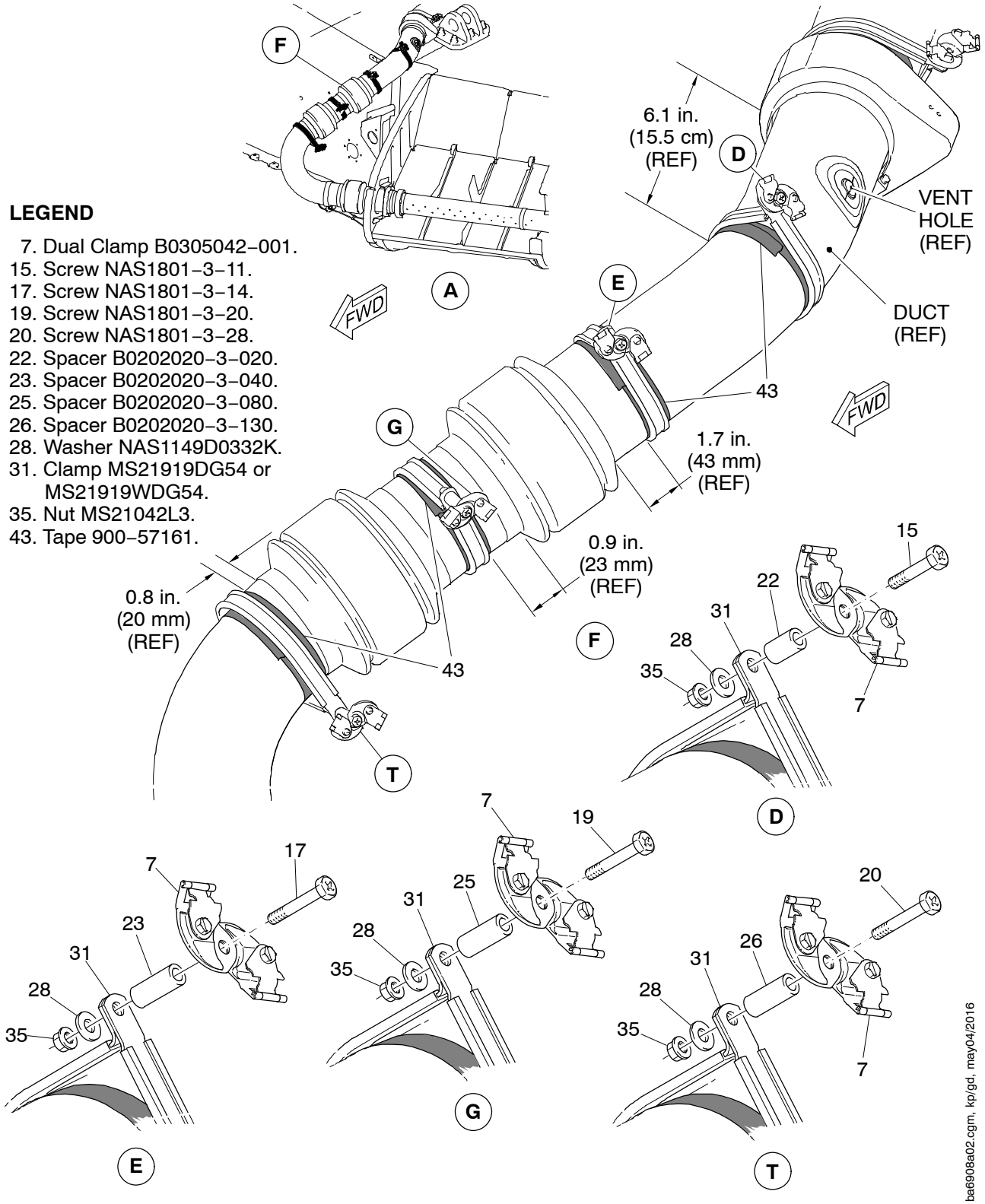

Installation of the New Hardware (Overwing Area)
Figure 4 (Sheet 2 of 4)

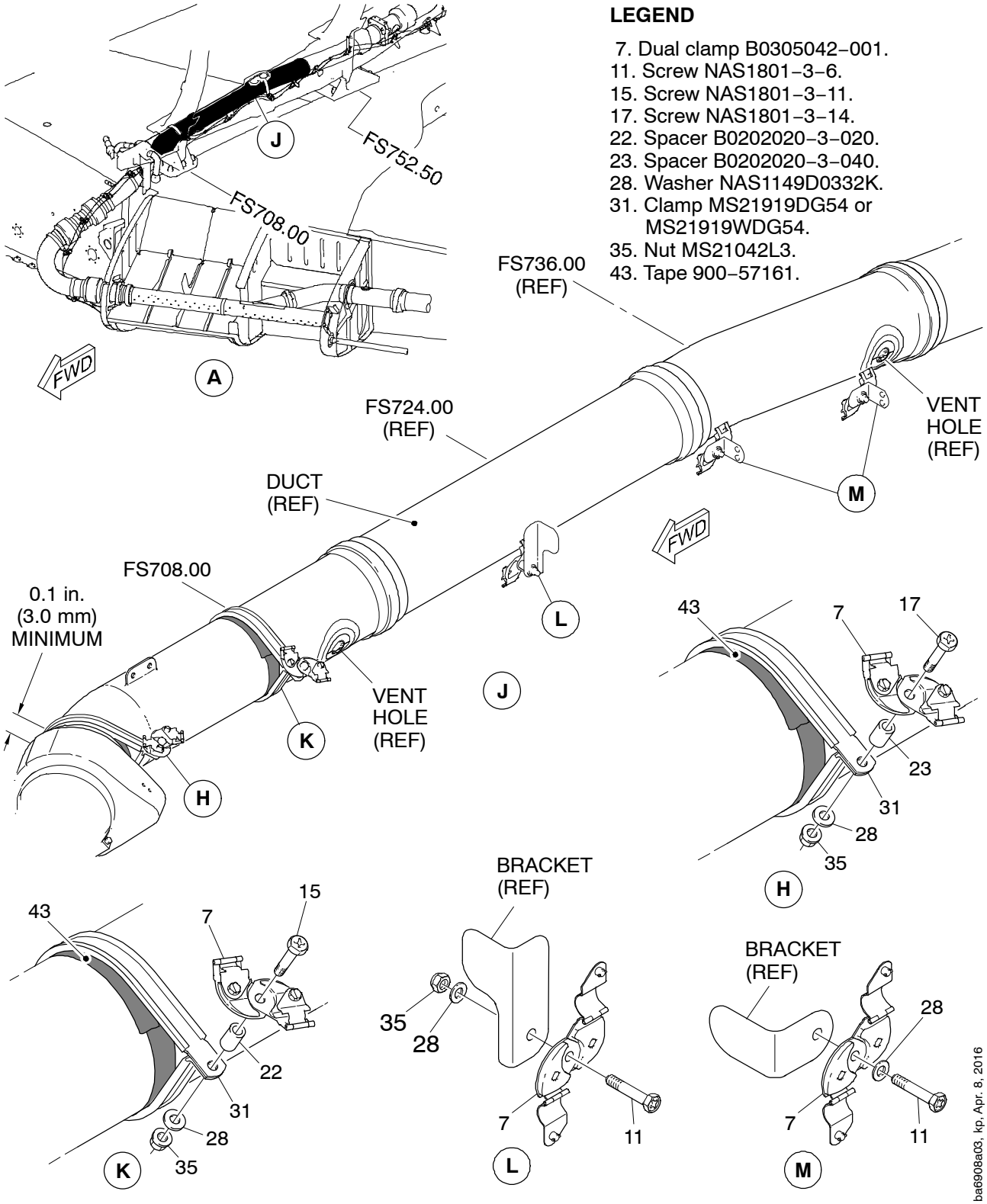

Installation of the New Hardware (Overwing Area)
Figure 4 (Sheet 3 of 4)

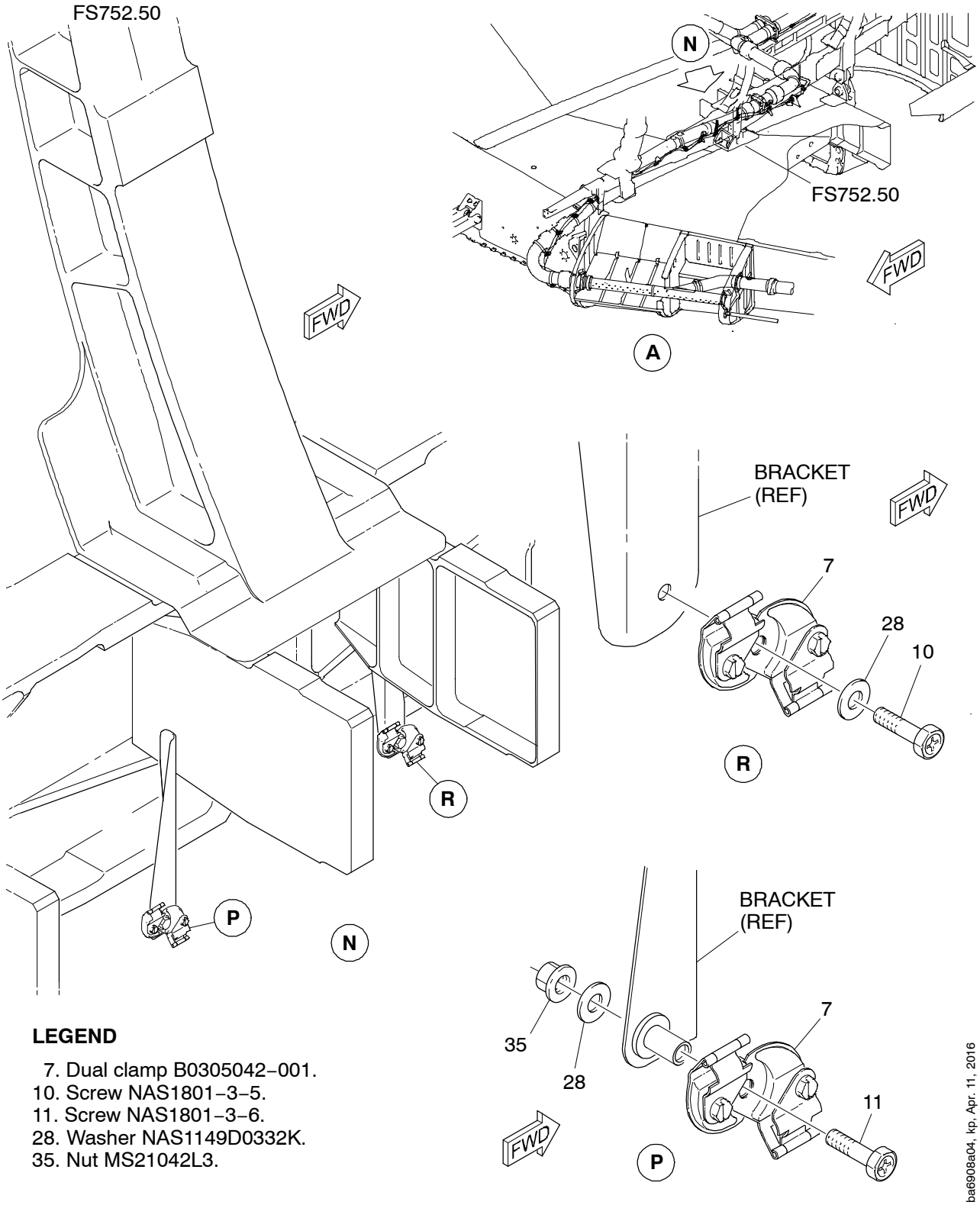

LEGEND

7. Dual clamp B0305042–001.
10. Screw NAS1801–3–5.
11. Screw NAS1801–3–6.
28. Washer NAS1149D0332K.
35. Nut MS21042L3.

Installation of the New Hardware (Overwing Area)
Figure 4 (Sheet 4 of 4)

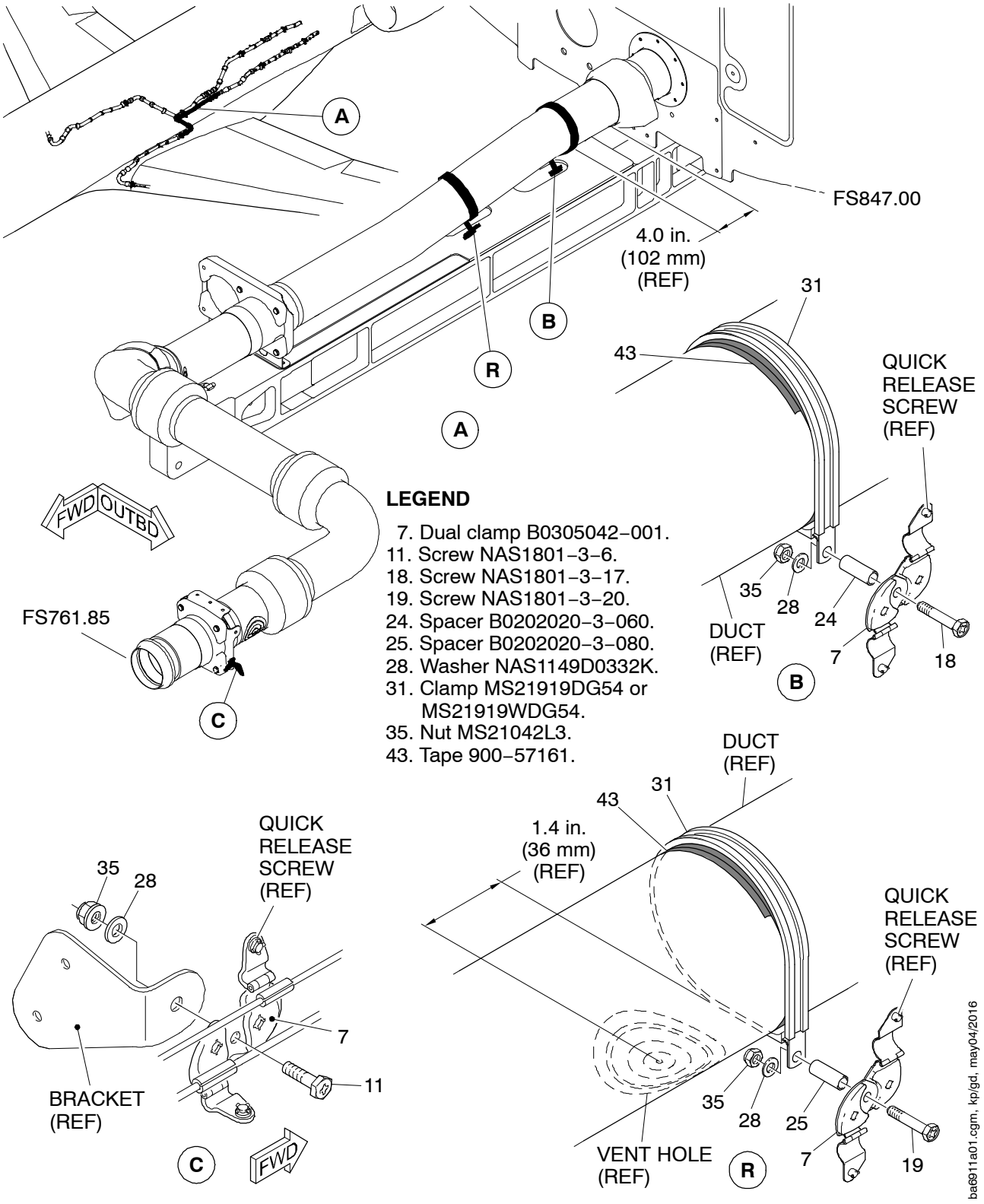

Installation of the New Hardware (MLG Area)
Figure 5 (Sheet 1 of 7)

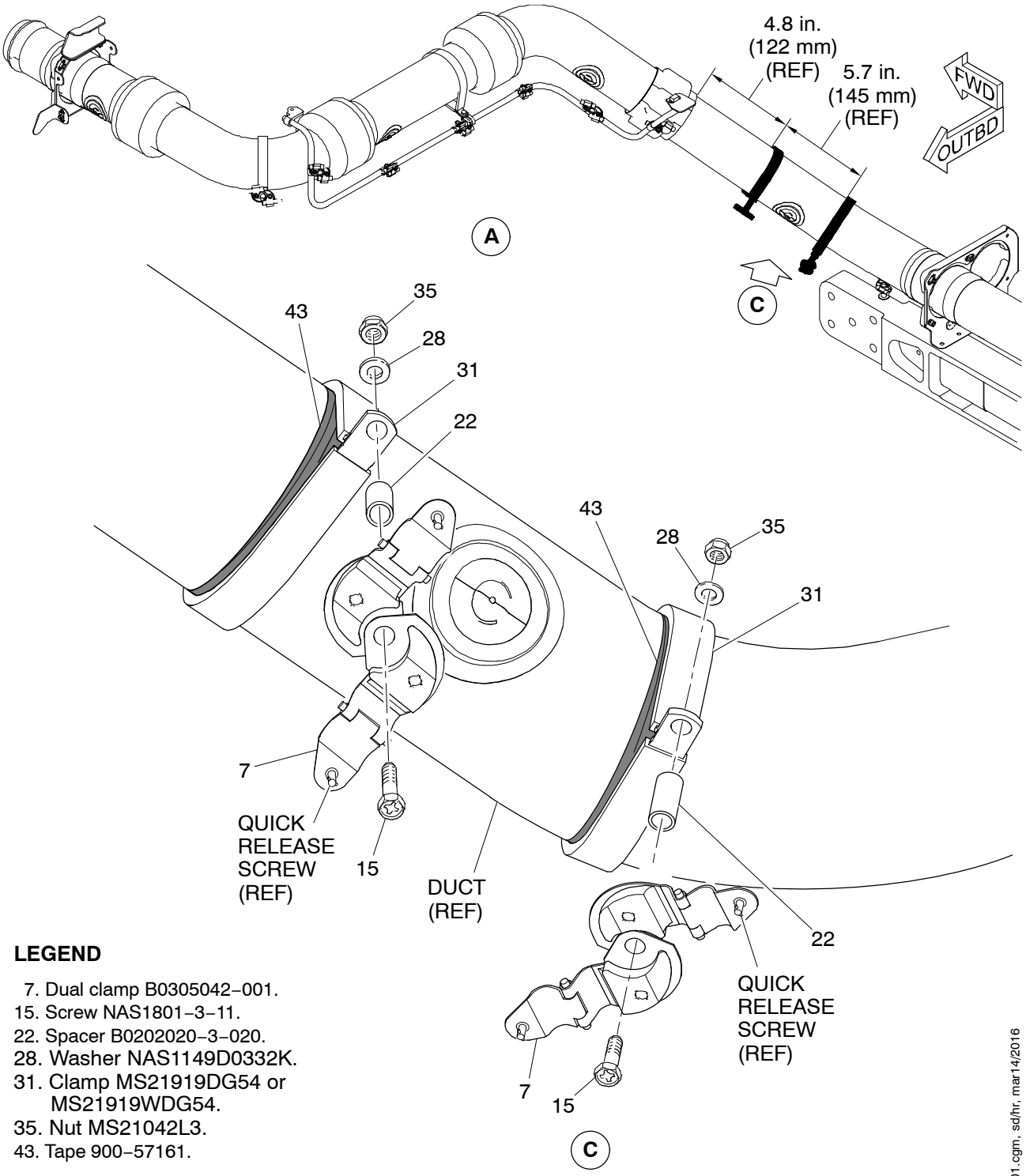

LEGEND

7. Dual clamp B0305042–001.
15. Screw NAS1801–3–11.
22. Spacer B0202020–3–020.
28. Washer NAS1149D0332K.
31. Clamp MS21919DG54 or MS21919WDG54.
35. Nut MS21042L3.
43. Tape 900–57161.

Installation of the New Hardware (MLG Area)
Figure 5 (Sheet 2 of 7)

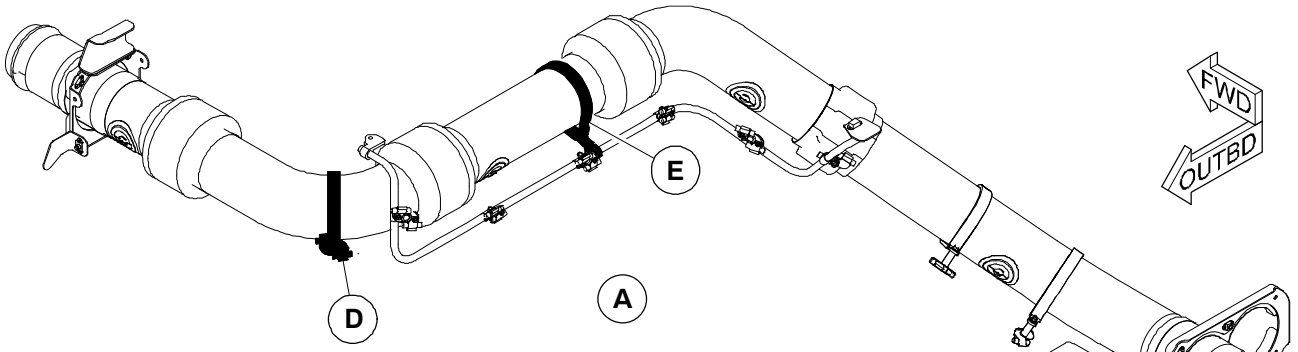

LEGEND

7. Dual clamp B0305042–001.
13. Screw NAS1801–3–9.
17. Screw NAS1801–3–14.
23. Spacer B0202020–3–040.
28. Washer NAS1149D0332K.
30. Clamp MS21919WDG6 or MS21919DG6.
31. Clamp MS21919DG54 or MS21919WDG54.
35. Nut MS21042L3.
43. Tape 900–57161.

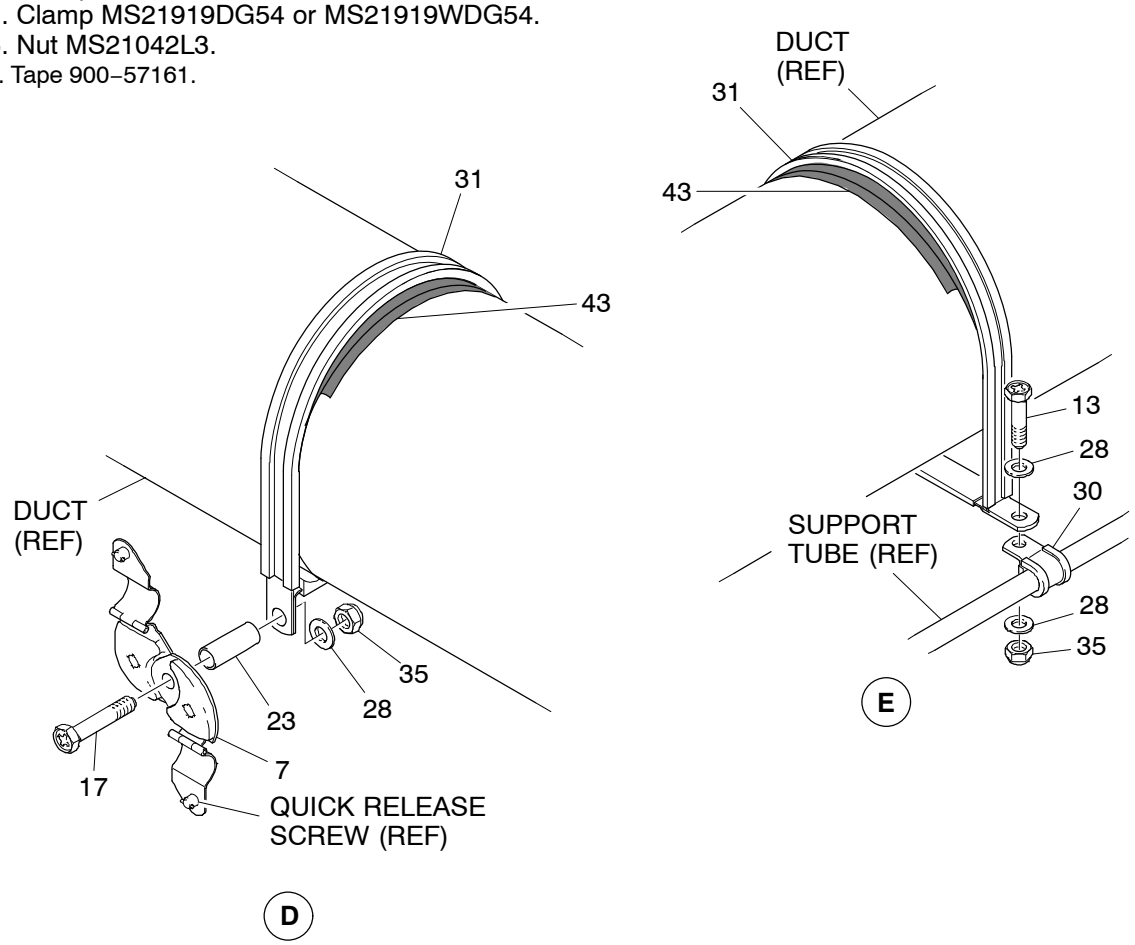

ba6911a03_01.cgm, kp/hr, mar14/2016

Installation of the New Hardware (MLG Area)
Figure 5 (Sheet 3 of 7)

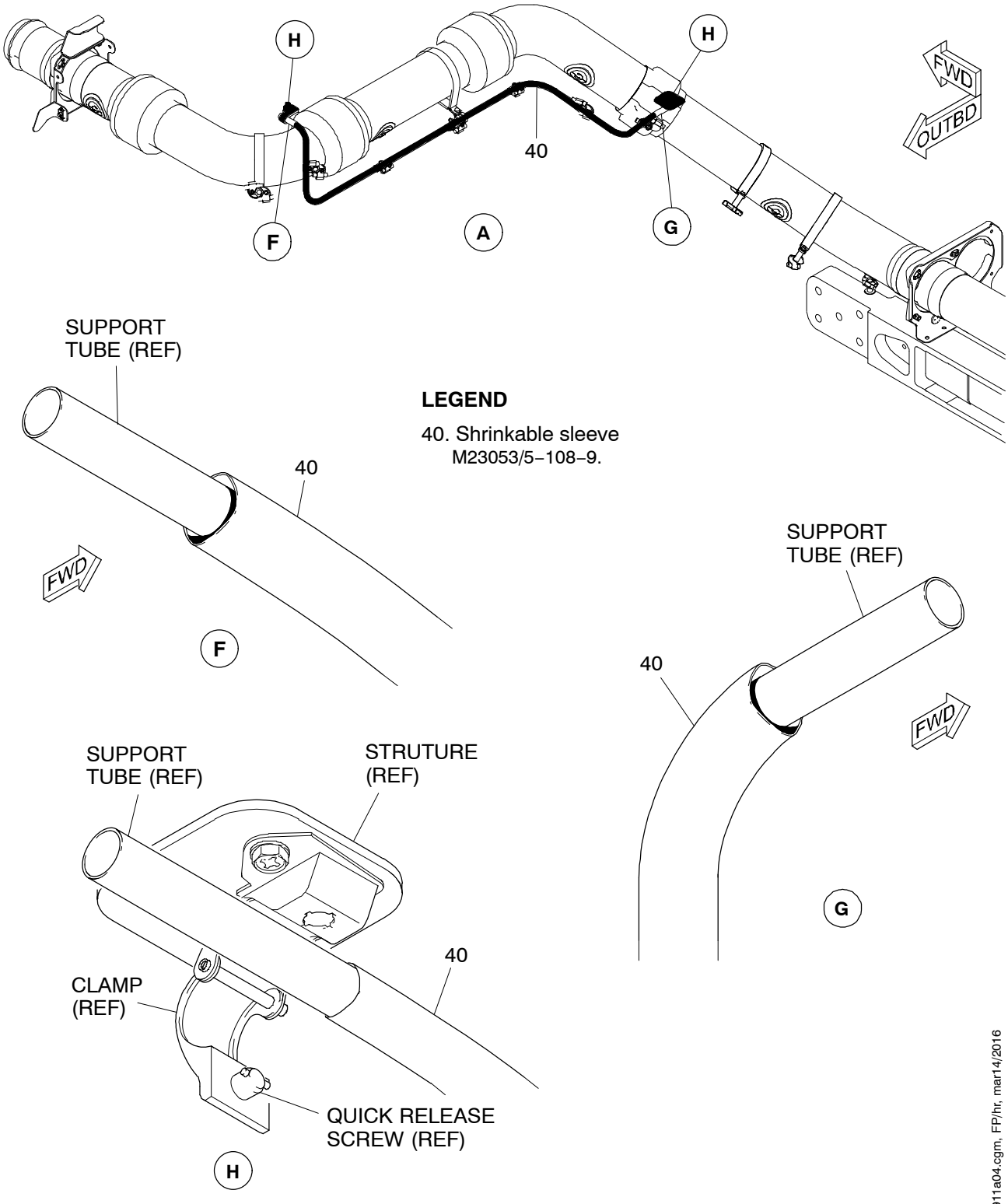

Installation of the New Hardware (MLG Area)
Figure 5 (Sheet 4 of 7)

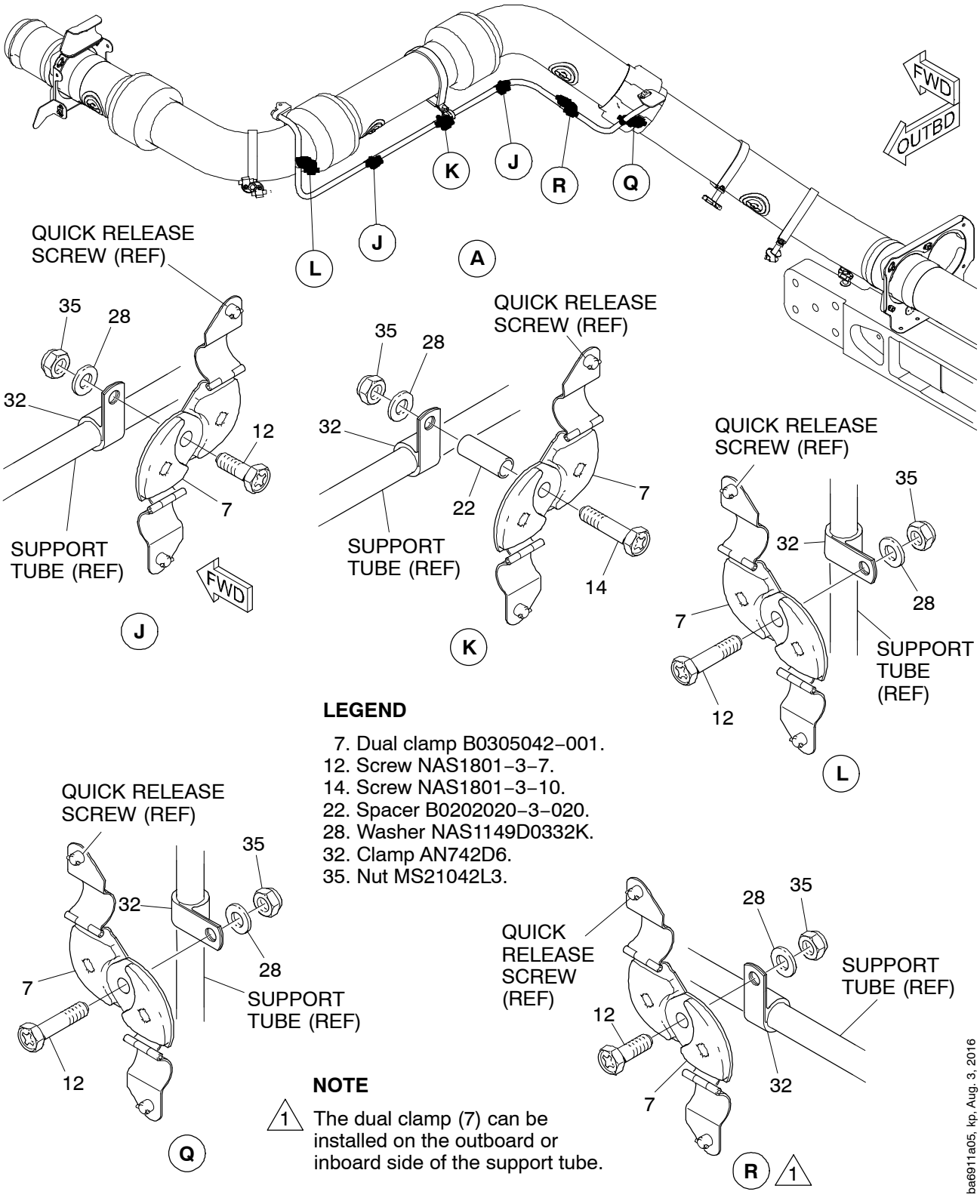

LEGEND

7. Dual clamp B0305042–001.
12. Screw NAS1801–3–7.
14. Screw NAS1801–3–10.
22. Spacer B0202020–3–020.
28. Washer NAS1149D0332K.
32. Clamp AN742D6.
35. Nut MS21042L3.

NOTE

1 The dual clamp (7) can be installed on the outboard or inboard side of the support tube.

Installation of the New Hardware (MLG Area)
Figure 5 (Sheet 5 of 7)

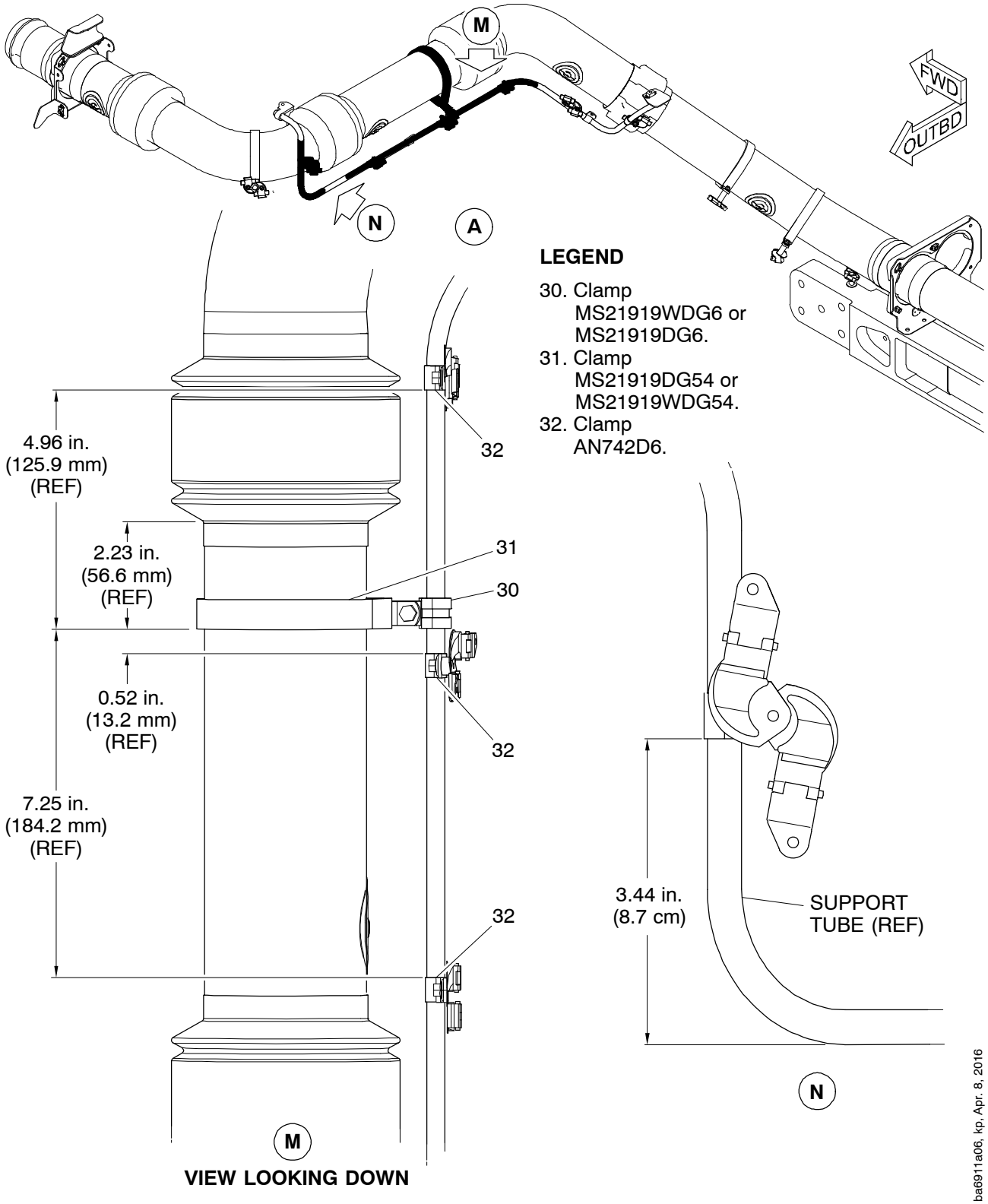

Installation of the New Hardware (MLG Area)
Figure 5 (Sheet 6 of 7)

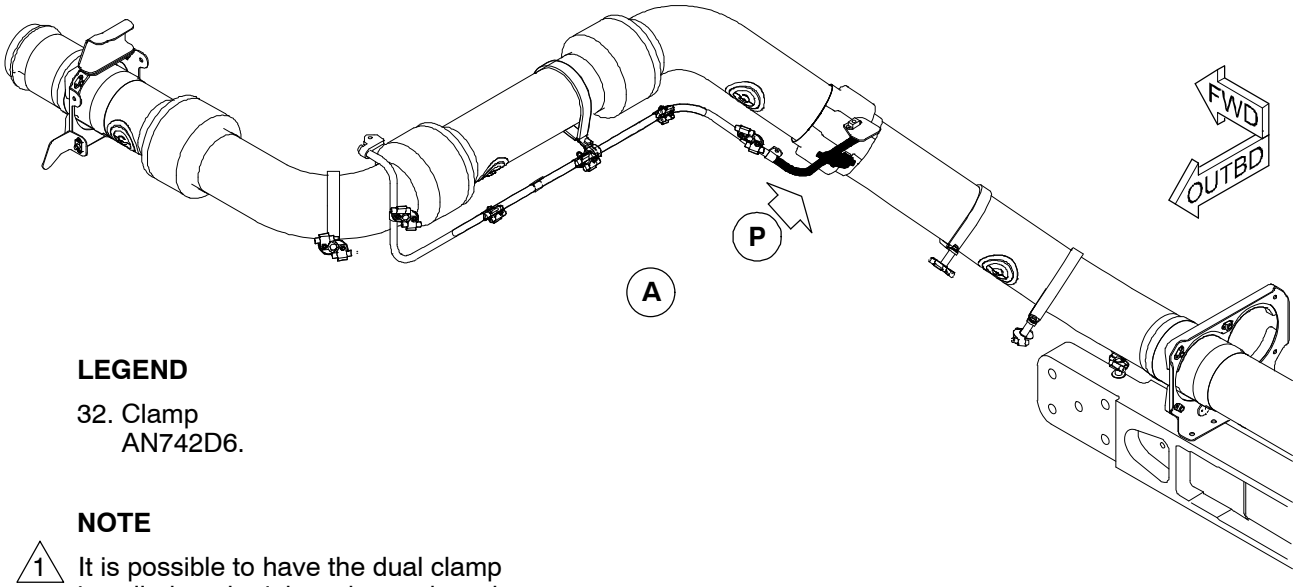

LEGEND

32. Clamp
AN742D6.

NOTE

1 It is possible to have the dual clamp installed on the inboard or outboard side of the support tube.

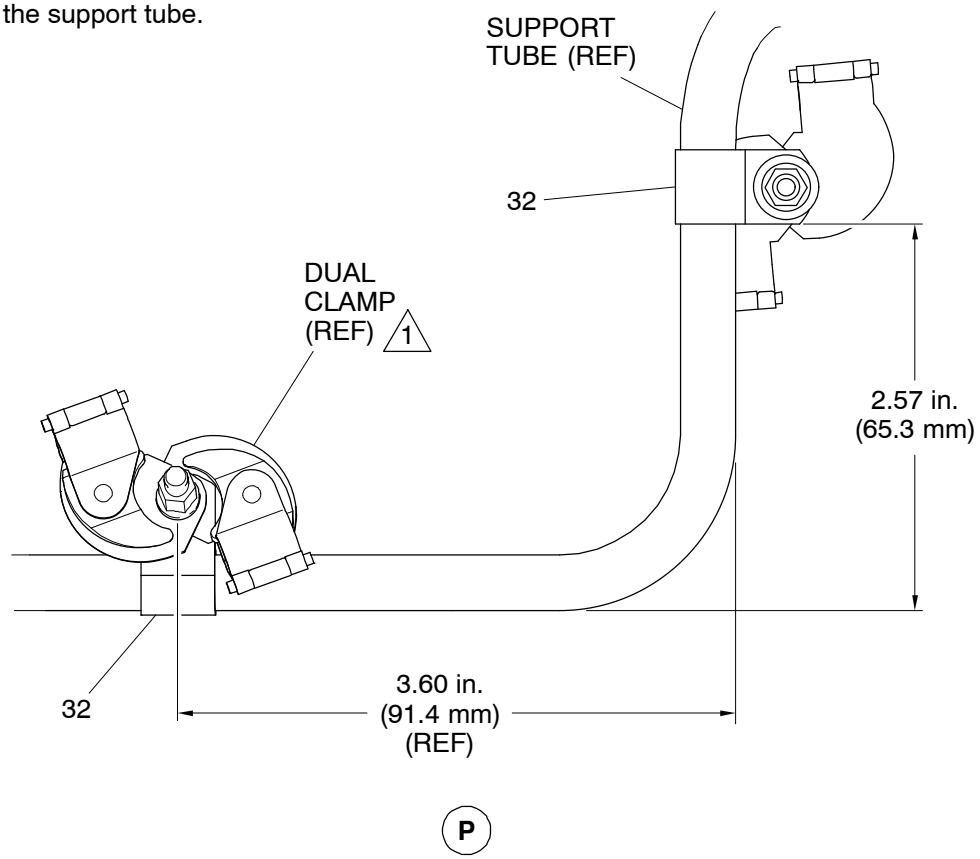

ba6911a07, kp, Aug.3, 2016

Installation of the New Hardware (MLG Area)
Figure 5 (Sheet 7 of 7)

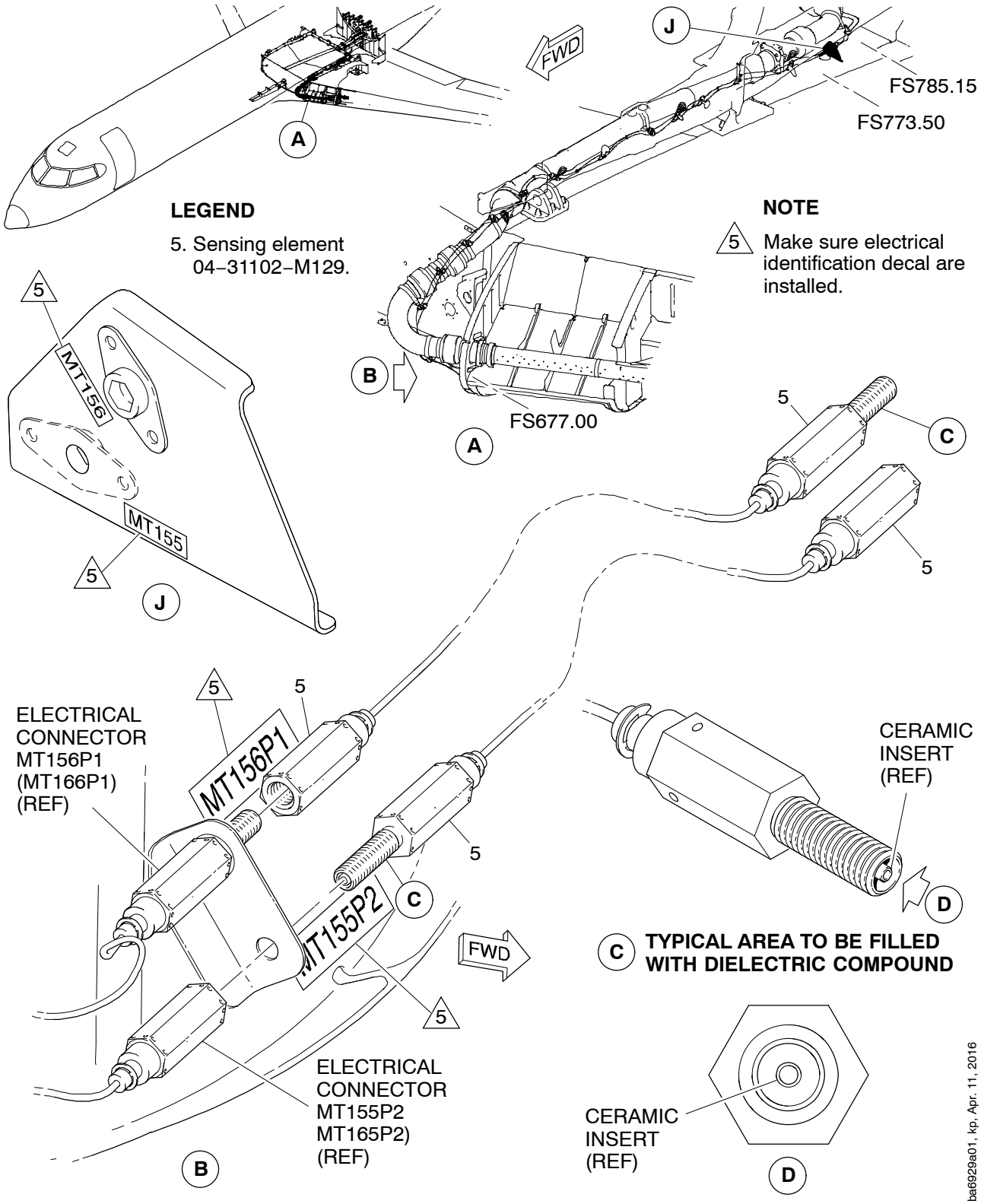

Installation of Insert and electrical insulating Compound
Figure 6 (sheet 1 of 2)

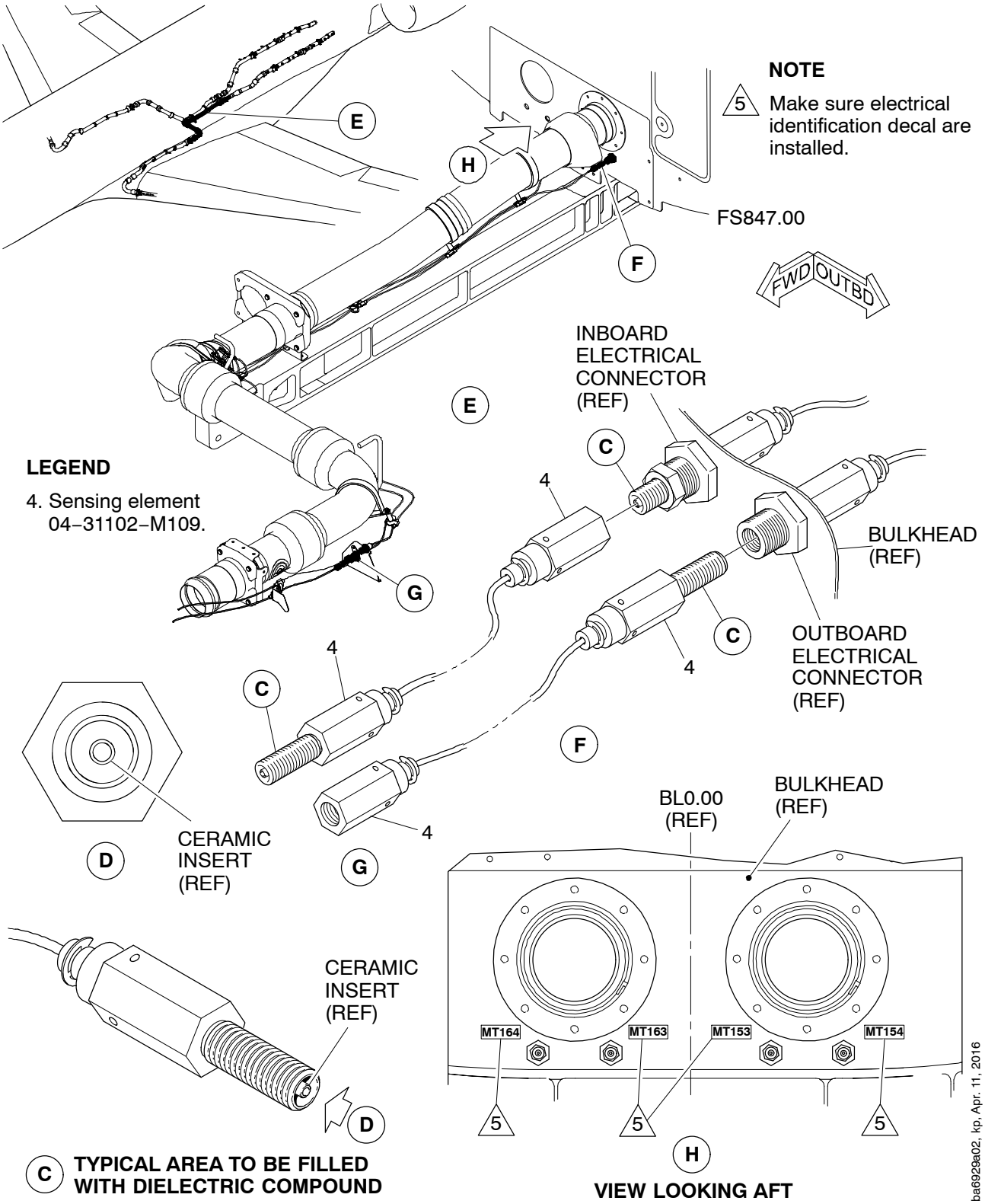

Installation of Insert and electrical insulating Compound
Figure 6 (sheet 2 of 2)

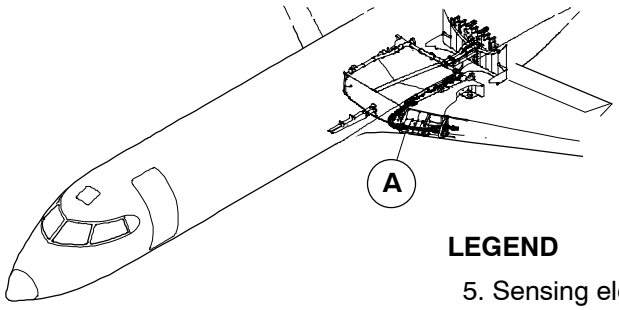

LEGEND

5. Sensing element 04–31102–M129.
29. Washer NAS1149E0532P.
34. Nut NAS509–5C.

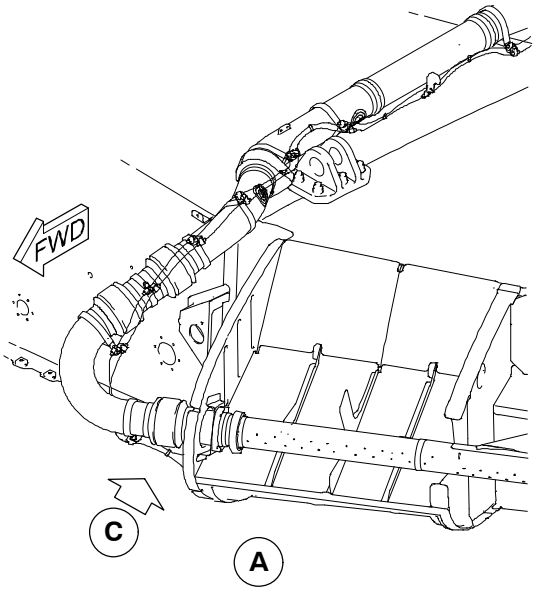

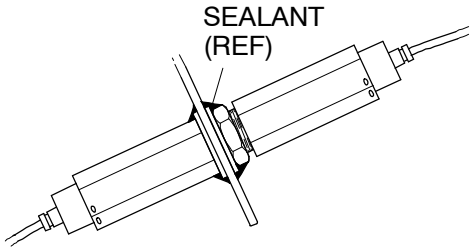

B **TYPICAL SEALANT INSTALLATION**

NOTE

4. On a straight lenght of sensing element, the distance between each dual clamp is 8 in. (20 cm) maximum. If a conduit and a cable tie are installed in a middle position between two dual clamps, it is permitted to have a distance between each dual clamp of more than 8 in. (20 cm) and less than 13 in (33 cm). The installation of the conduit and the cable tie does not change the hardware installation requirements of this service bulletin.

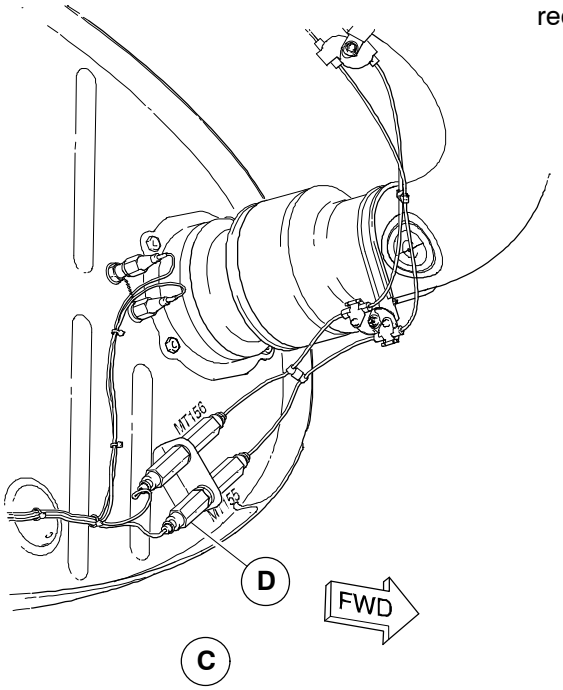

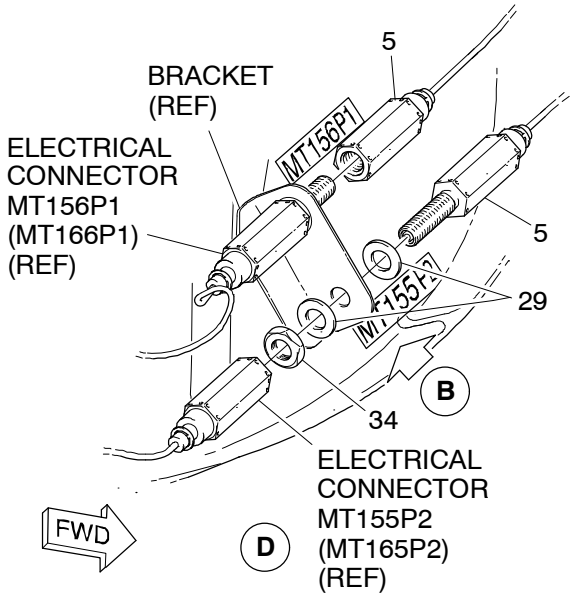

ba6909a01, kp, Apr. 11, 2016

Installation of the New Sensing Elements (Overwing Area)
Figure 7 (Sheet 1 of 9)

LEGEND

5. Sensing element 04–31102–M129.
7. Dual clamp B0305042–001.
8. Grommet 324352.
37. Tiedown strap B0816019–003.
39. Conduit S10155M14.

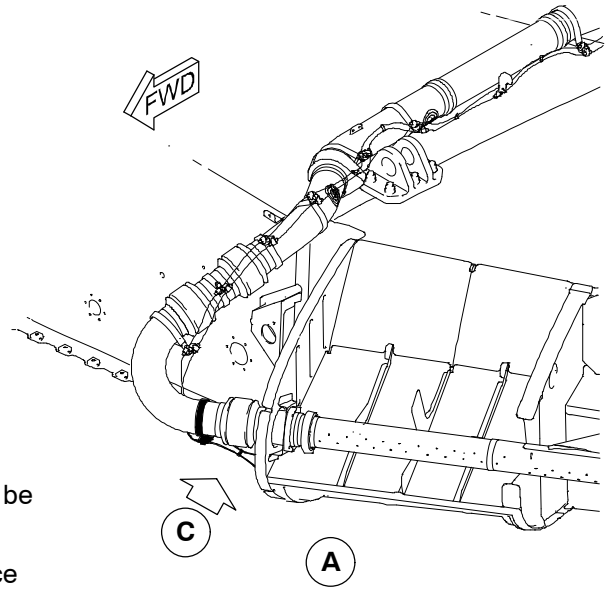

NOTES

1. The distance between the two sensing elements to be 0.50 to 0.70 in. (12.7 to 17.8 mm).

4. On a straight length of sensing element, the distance between each dual clamp is 8 in. (20 cm) maximum. If a conduit and a cable tie are installed in a middle position between two dual clamps, it is permitted to have a distance between each dual clamp of more than 8 in. (20 cm) and less than 13 in (33 cm). The installation of the conduit and the cable tie does not change the hardware installation requirements of this service bulletin.

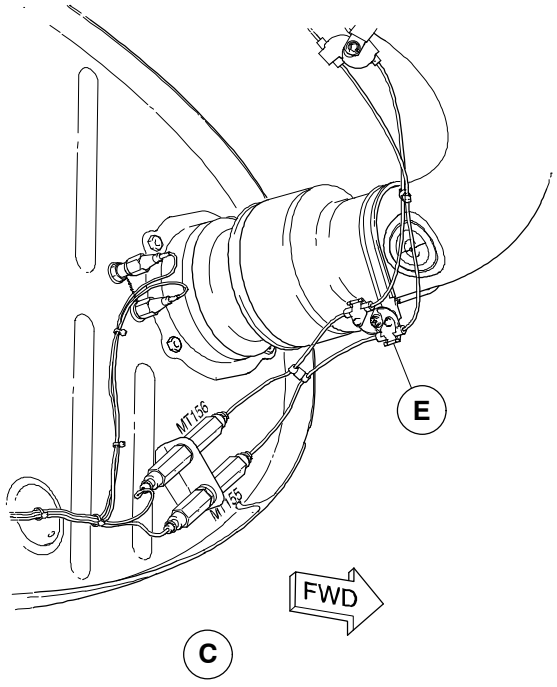

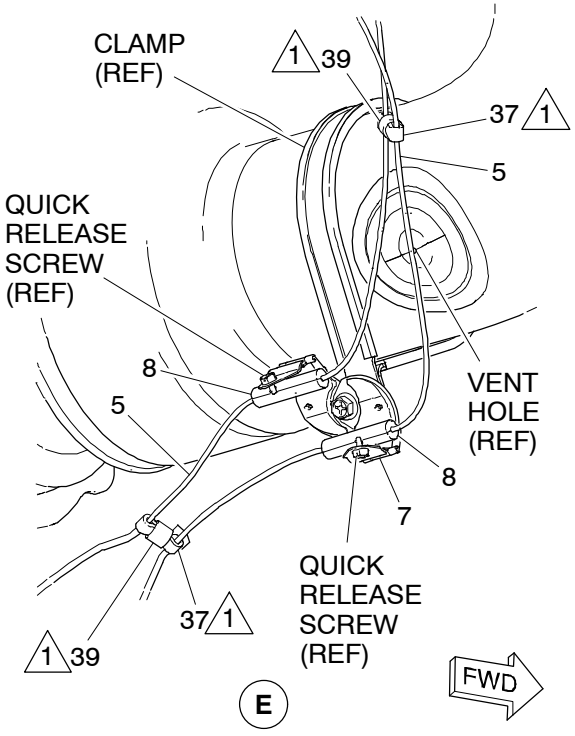

ba6909a02, kp, Apr. 11, 2016

Installation of the New Sensing Elements (Overwing Area)
Figure 7 (Sheet 2 of 9)

NOTES

1. The distance between the two sensing elements to be 0.50 to 0.70 in. (12.7 to 17.8 mm).

4. On a straight length of sensing element, the distance between each dual clamp is 8 in. (20 cm) maximum. If a conduit and a cable tie are installed in a middle position between two dual clamps, it is permitted to have a distance between each dual clamp of more than 8 in. (20 cm) and less than 13 in (33 cm). The installation of the conduit and the cable tie does not change the hardware installation requirements of this service bulletin.

LEGEND

5. Sensing element 04–31102–M129.
7. Dual clamp B0305042–001.
8. Grommet 324352.
37. Tiedown strap B0816019–003.
39. Conduit S10155M14.

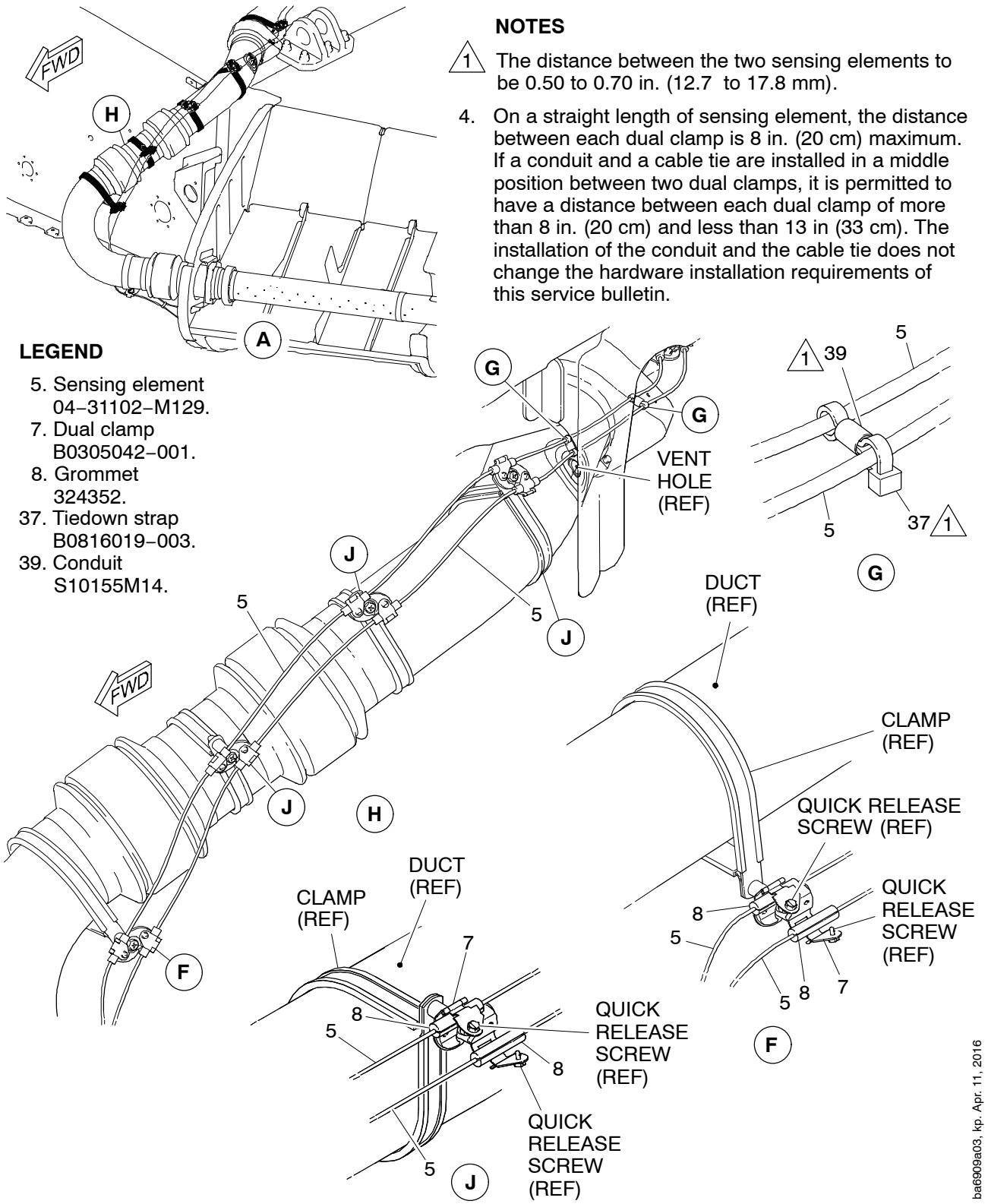

Installation of the New Sensing Elements (Overwing Area)
Figure 7 (Sheet 3 of 9)

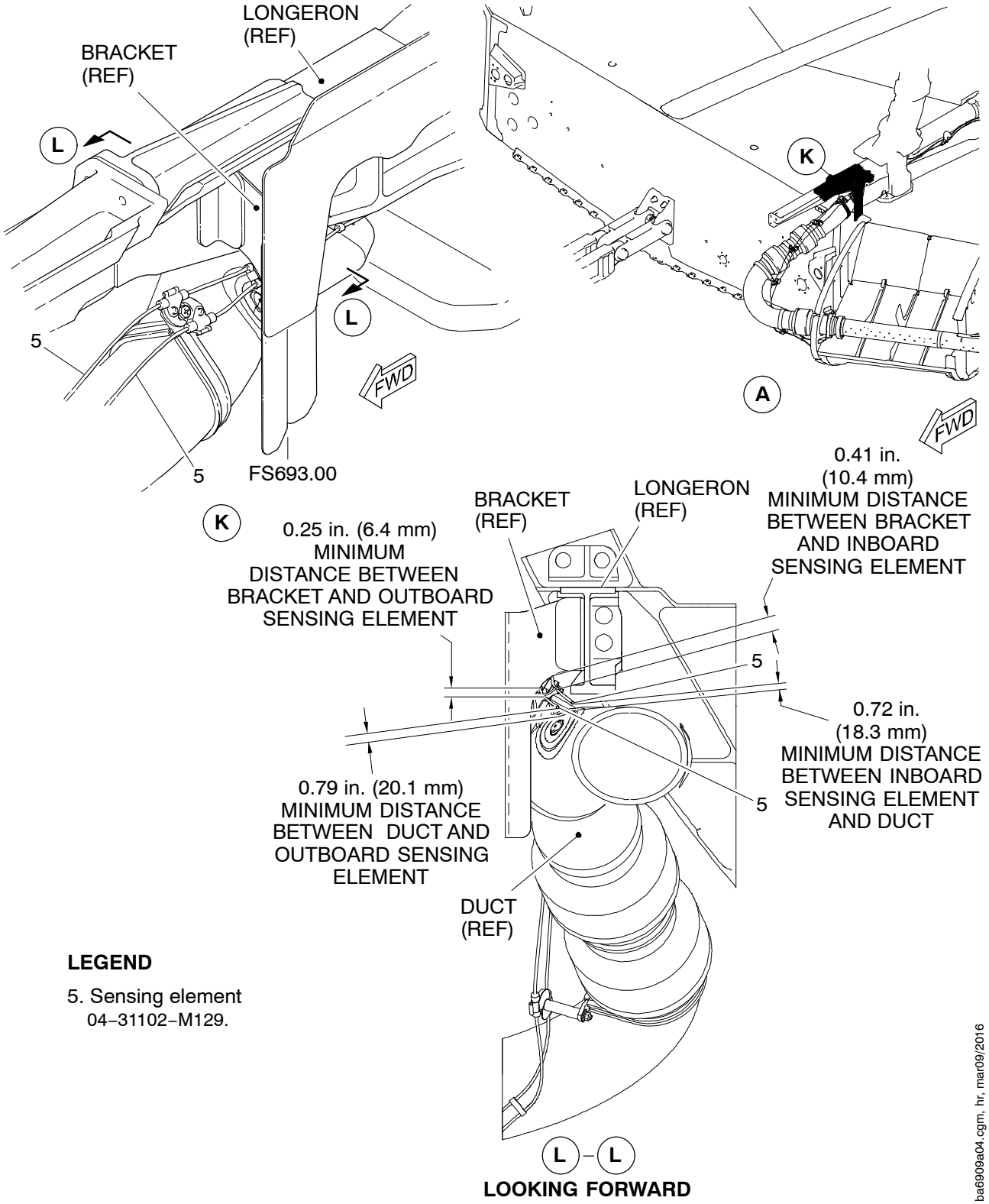

LEGEND

5. Sensing element
04–31102–M129.

ba6909a04.cgm, hr, mar09/2016

Installation of the New Sensing Elements (Overwing Area)
Figure 7 (Sheet 4 of 9)

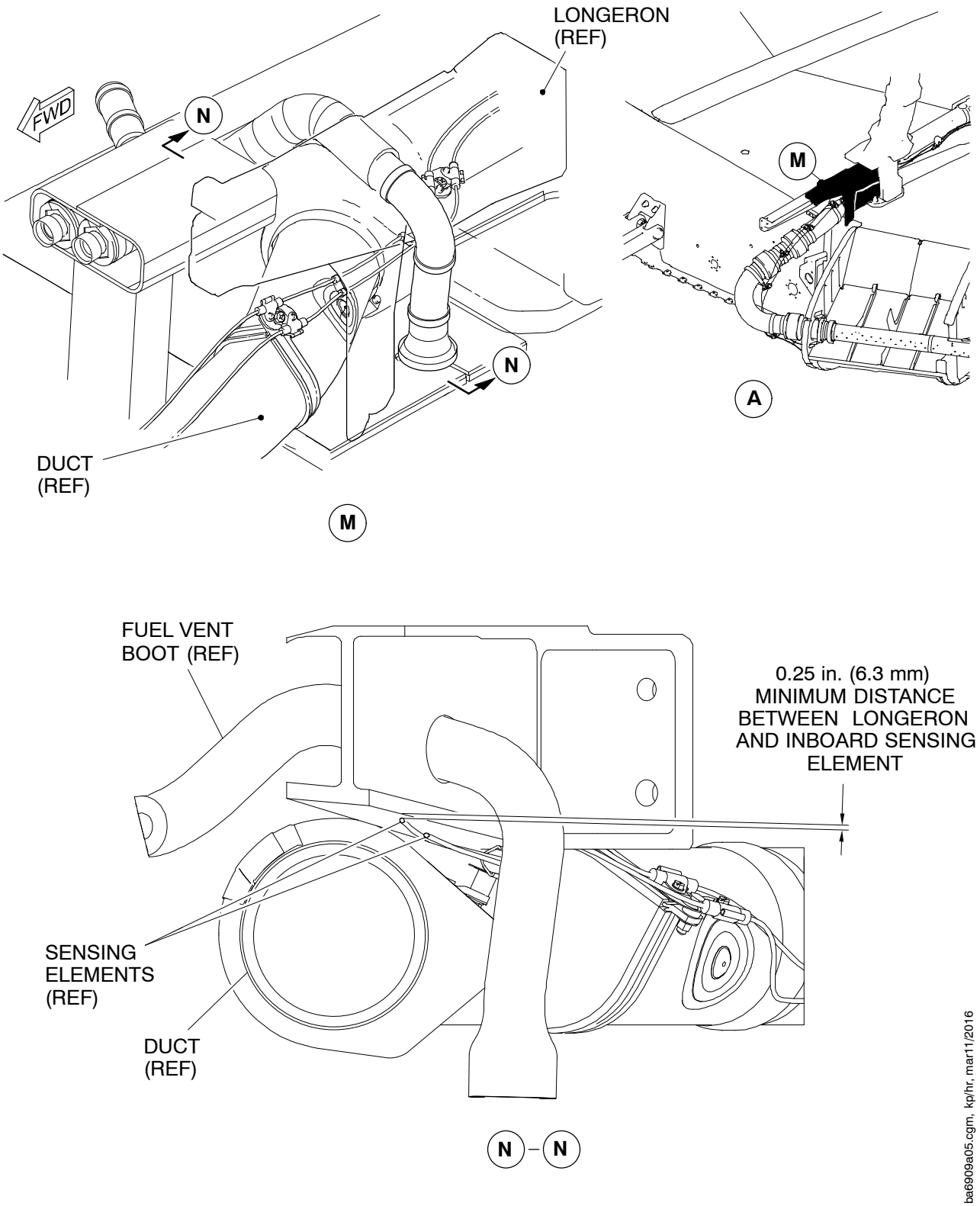

Installation of the New Sensing Elements (Overwing Area)
Figure 7 (Sheet 5 of 9)

NOTES

1. The distance between the two sensing elements to be 0.50 to 0.70 in. (12.7 to 17.8 mm).

4. On a straight length of sensing element, the distance between each dual clamp is 8 in. (20 cm) maximum. If a conduit and a cable tie are installed in a middle position between two dual clamps, it is permitted to have a distance between each dual clamp of more than 8 in. (20 cm) and less than 13 in. (33 cm). The installation of the conduit and the cable tie does not change the hardware installation requirements of this service bulletin.

LEGEND

5. Sensing element 04–31102–M129.
7. Dual clamp B0305042–001.
8. Grommet 324352.
37. Tiedown strap B0816019–003.
39. Conduit S10155M14.

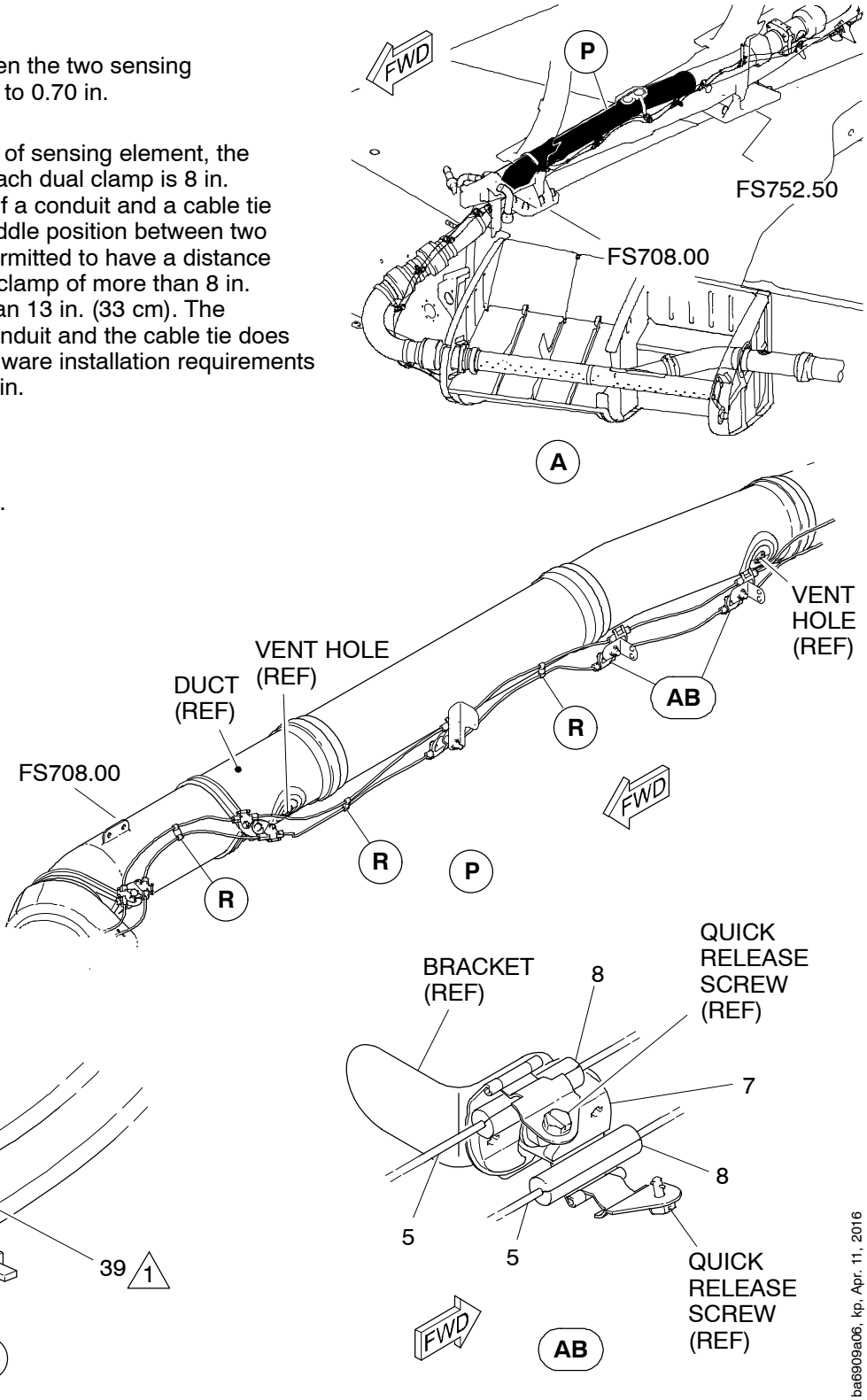

Installation of the New Sensing Elements (Overwing Area)
Figure 7 (Sheet 6 of 9)

LEGEND

5. Sensing element 04–31102–M129.
7. Dual clamp B0305042–001.
8. Grommet 324352.

NOTE

4. On a straight length of sensing element, the distance between each dual clamp is 8 in. (20 cm) maximum. If a conduit and a cable tie are installed in a middle position between two dual clamps, it is permitted to have a distance between each dual clamp of more than 8 in. (20 cm) and less than 13 in. (33 cm). The installation of the conduit and the cable tie does not change the hardware installation requirements of this service bulletin.

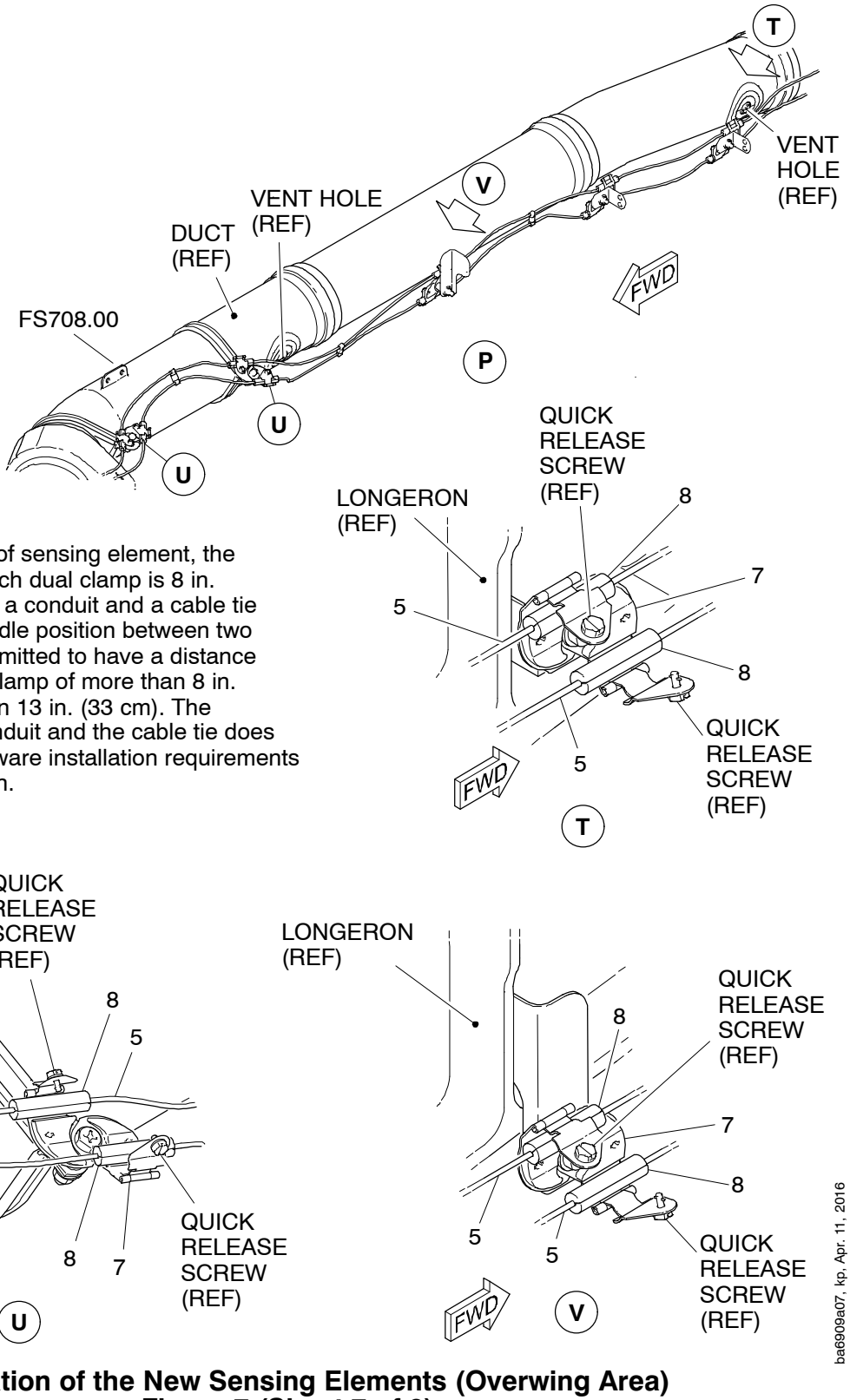

Installation of the New Sensing Elements (Overwing Area)
Figure 7 (Sheet 7 of 9)

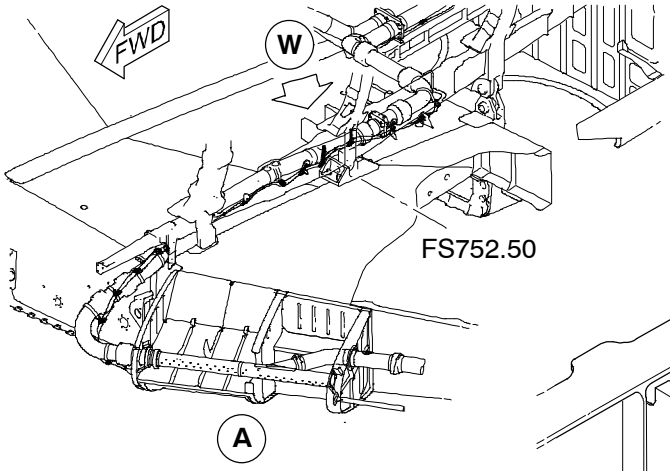

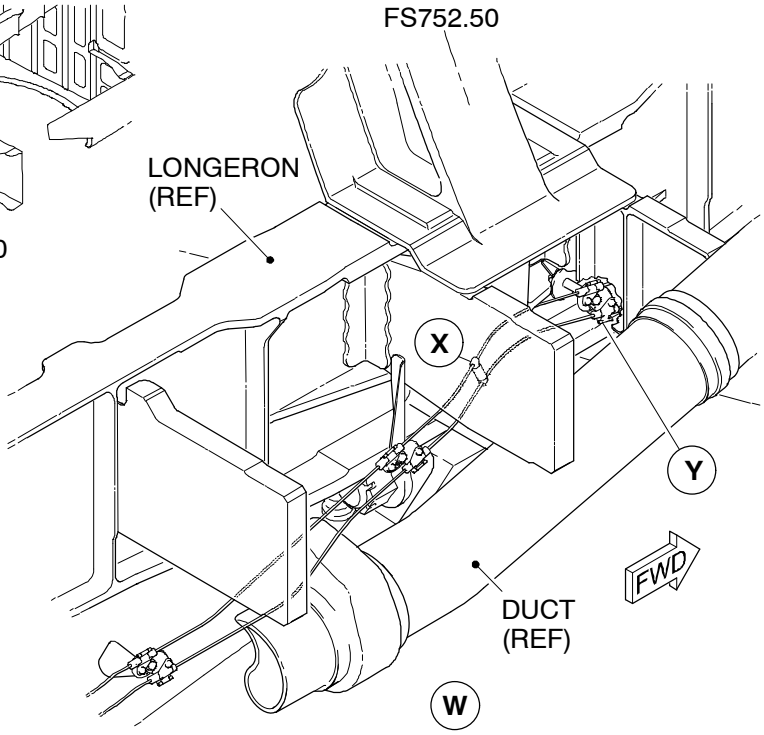

LEGEND

5. Sensing element 04–31102–M129.
7. Dual clamp B0305042–001.
8. Grommet 324352.
37. Tiedown strap B0816019–003.
39. Conduit S10155M14

NOTES

1. The distance between the two sensing elements to be 0.50 to 0.70 in. (12.7 to 17.8 mm).

4. On a straight length of sensing elements, the distance between each dual clamp is 8 in. (20 cm) maximum. If a conduit and a cable tie are installed in a middle position between two dual clamps, it is permitted to have a distance between each dual clamp of more than 8 in. (20 cm) and less than 13 in. (33 cm). The installation of the conduit and the cable tie does not change the hardware installation requirements of this service bulletin.

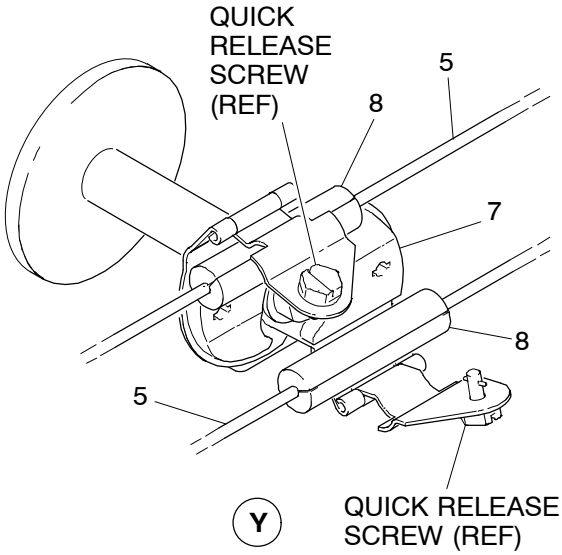

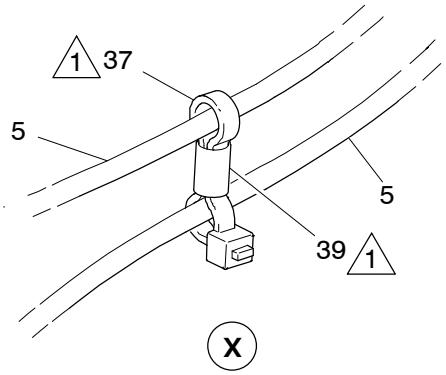

ba6909a11, kp, Apr. 11, 2016

Installation of the New Sensing Elements (Overwing Area)
Figure 7 (Sheet 8 of 9)

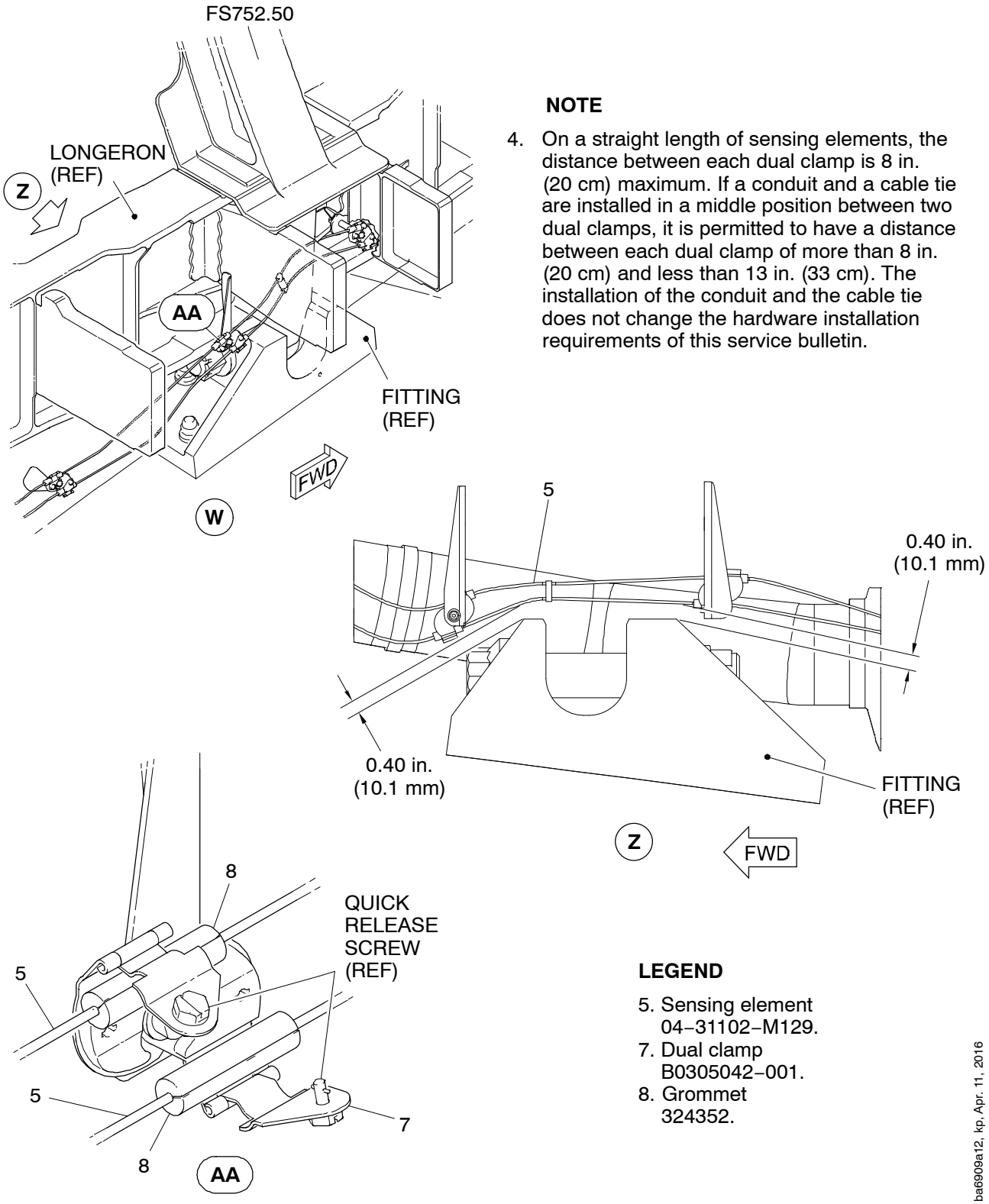

NOTE

4. On a straight length of sensing elements, the distance between each dual clamp is 8 in. (20 cm) maximum. If a conduit and a cable tie are installed in a middle position between two dual clamps, it is permitted to have a distance between each dual clamp of more than 8 in. (20 cm) and less than 13 in. (33 cm). The installation of the conduit and the cable tie does not change the hardware installation requirements of this service bulletin.

LEGEND

5. Sensing element 04–31102–M129.
7. Dual clamp B0305042–001.
8. Grommet 324352.

ba6909a12, kp, Apr. 11, 2016

Installation of the New Sensing Elements (Overwing Area)
Figure 7 (Sheet 9 of 9)

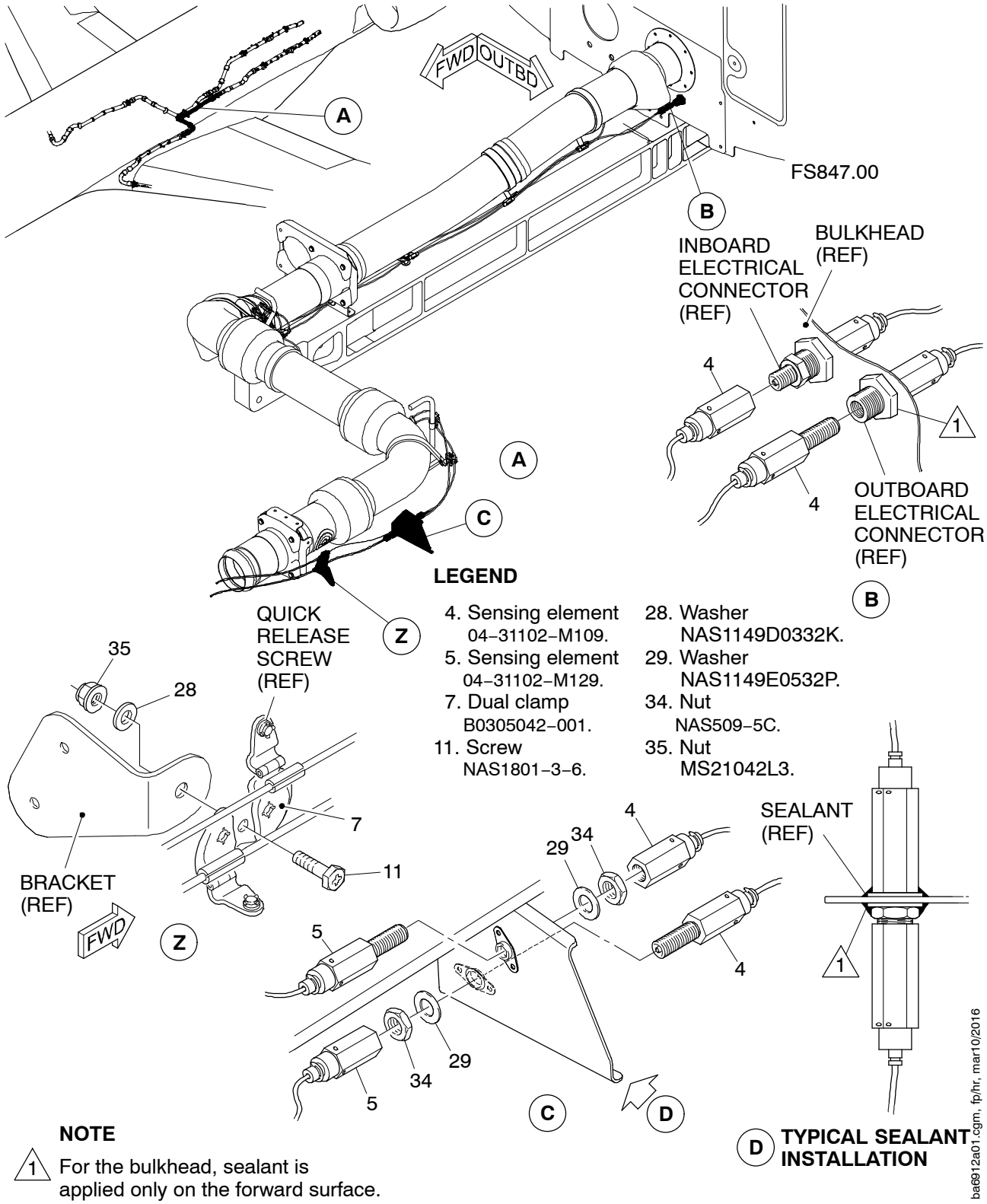

NOTE

1 For the bulkhead, sealant is applied only on the forward surface.

Installation of the New Sensing Elements (MLG Area)
Figure 8 (Sheet 1 of 7)

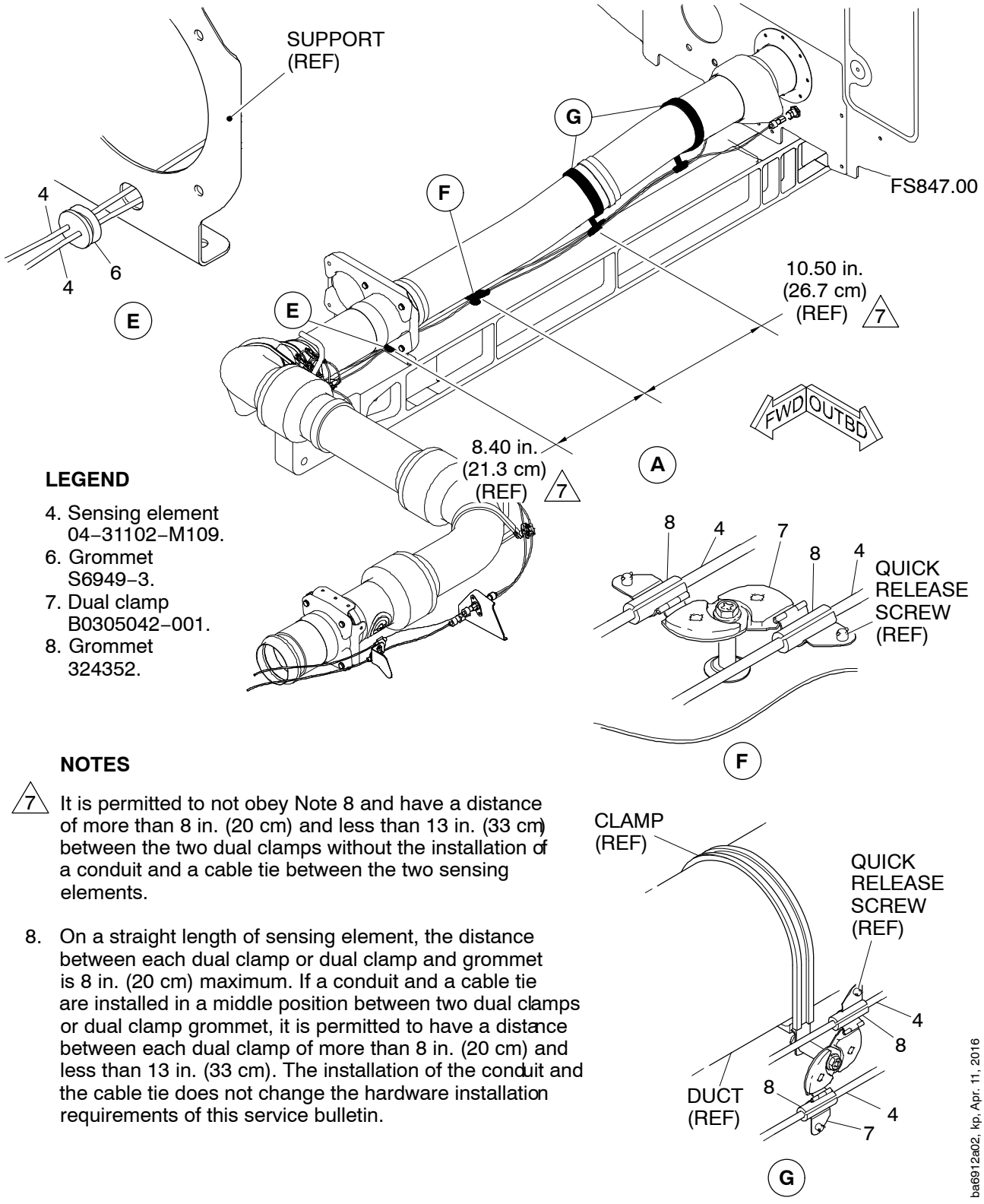

LEGEND

4. Sensing element 04–31102–M109.
6. Grommet S6949–3.
7. Dual clamp B0305042–001.
8. Grommet 324352.

NOTES

7 It is permitted to not obey Note 8 and have a distance of more than 8 in. (20 cm) and less than 13 in. (33 cm) between the two dual clamps without the installation of a conduit and a cable tie between the two sensing elements.

8. On a straight length of sensing element, the distance between each dual clamp or dual clamp and grommet is 8 in. (20 cm) maximum. If a conduit and a cable tie are installed in a middle position between two dual clamps or dual clamp grommet, it is permitted to have a distance between each dual clamp of more than 8 in. (20 cm) and less than 13 in. (33 cm). The installation of the conduit and the cable tie does not change the hardware installation requirements of this service bulletin.

ba6912a02, kp, Apr. 11, 2016

Installation of the New Sensing Elements (MLG Area)
Figure 8 (Sheet 2 of 7)

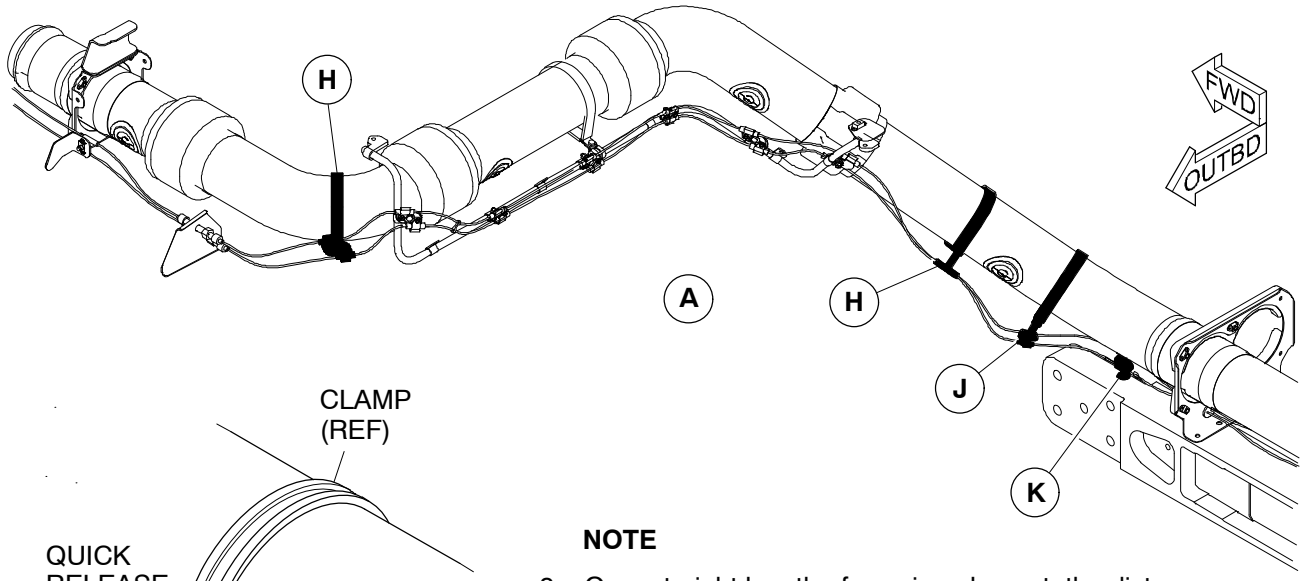

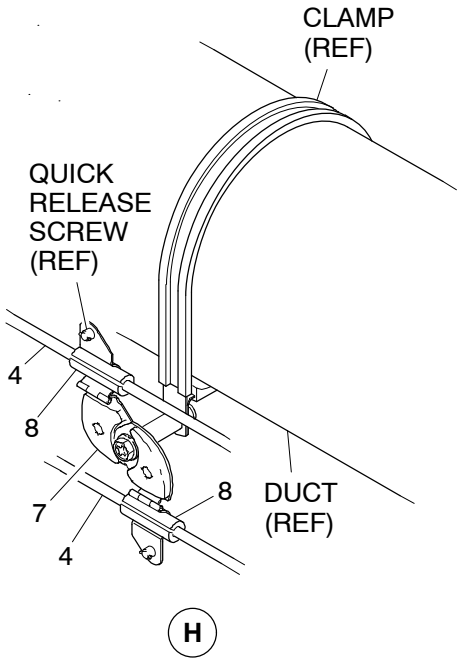

H

NOTE

8. On a straight length of sensing element, the distance between each dual clamp or dual clamp and grommet is 8 in. (20 cm) maximum. If a conduit and a cable tie are installed in a middle position between two dual clamps or dual clamp grommet, it is permitted to have a distance between each dual clamp of more than 8 in. (20 cm) and less than 13 in. (33 cm). The installation of the conduit and the cable tie does not change the hardware installation requirements of this service bulletin.

LEGEND

4. Sensing element 04–31102–M109.
7. Dual clamp B0305042–001.
8. Grommet 324352.

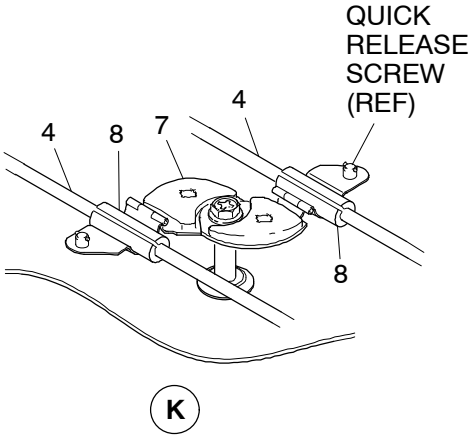

K

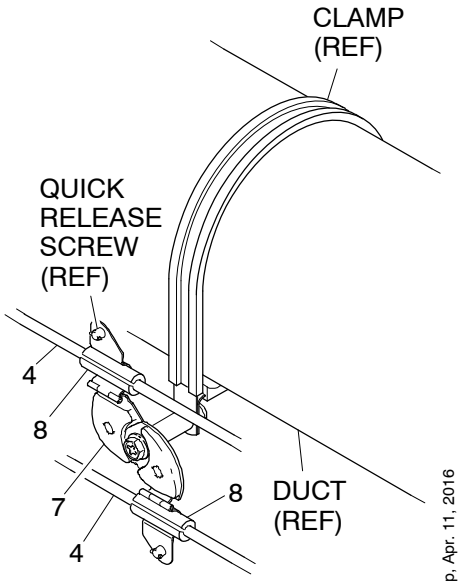

J

ba6912a03, kp, Apr. 11, 2016

Installation of the New Sensing Elements (MLG Area)
Figure 8 (Sheet 3 of 7)

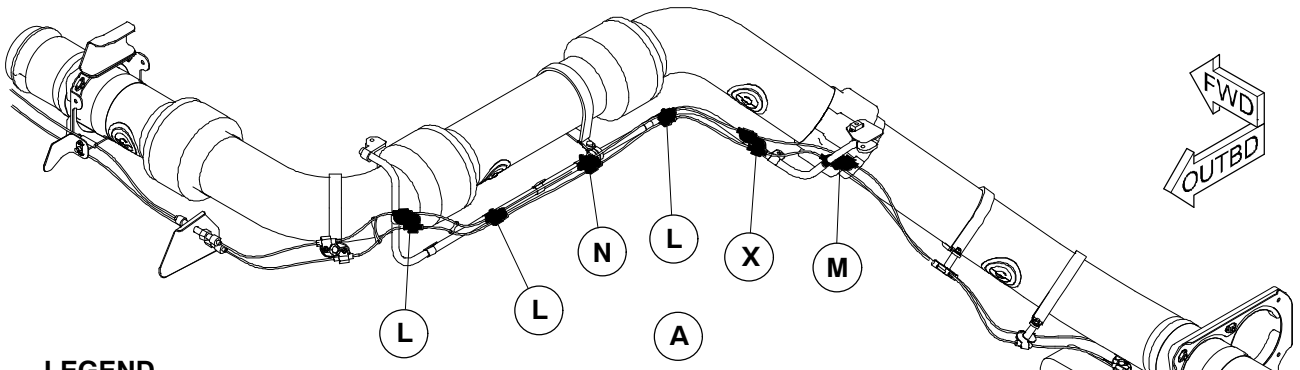

LEGEND

4. Sensing element 04–311042–M109.
7. Dual clamp B0305042–001.
8. Grommet 324352.

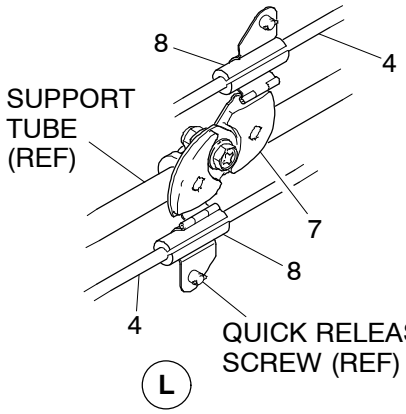

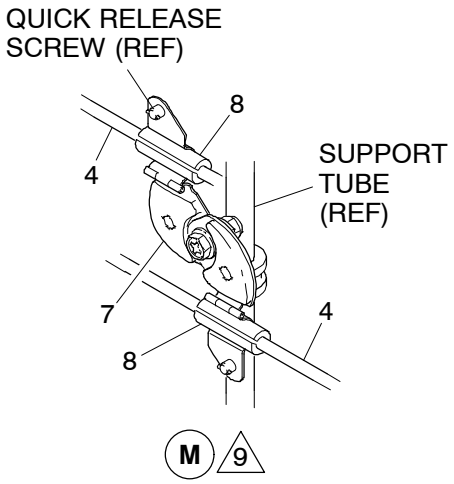

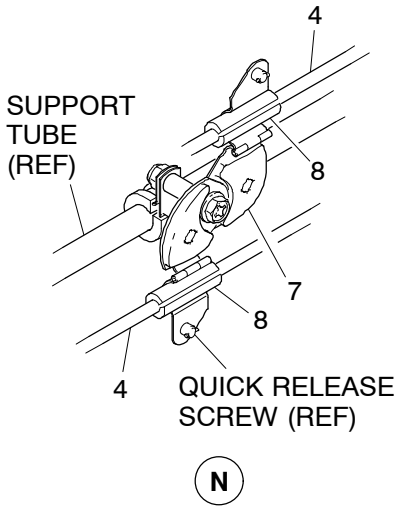

NOTES

8. On a straight length of sensing element, the distance between each dual clamp or dual clamp and grommet is 8 in. (20 cm) maximum. If a conduit and a cable tie are installed in a middle position between two dual clamps or dual clamp grommet, it is permitted to have a distance between each dual clamp of more than 8 in. (20 cm) and less than 13 in. (33 cm). The installation of the conduit and the cable tie does not change the hardware requirements of this service bulletin.

△9 The clearance between the support tube and the sensing elements to be 0.14 in. (3.6 mm) minimum.

△10 The dual clamp (7) can be installed on the outboard or inboard side of the support tube.

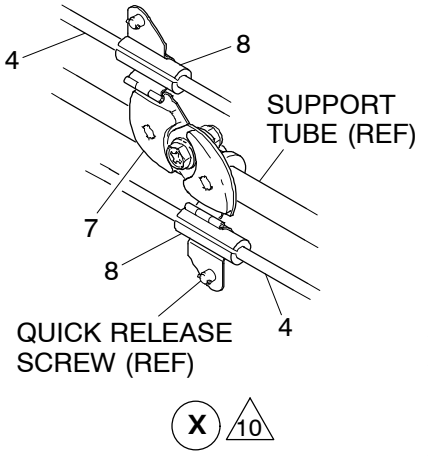

ba6912a04, kp, Aug. 3, 2016

Installation of the New Sensing Elements (MLG Area)
Figure 8 (Sheet 4 of 7)

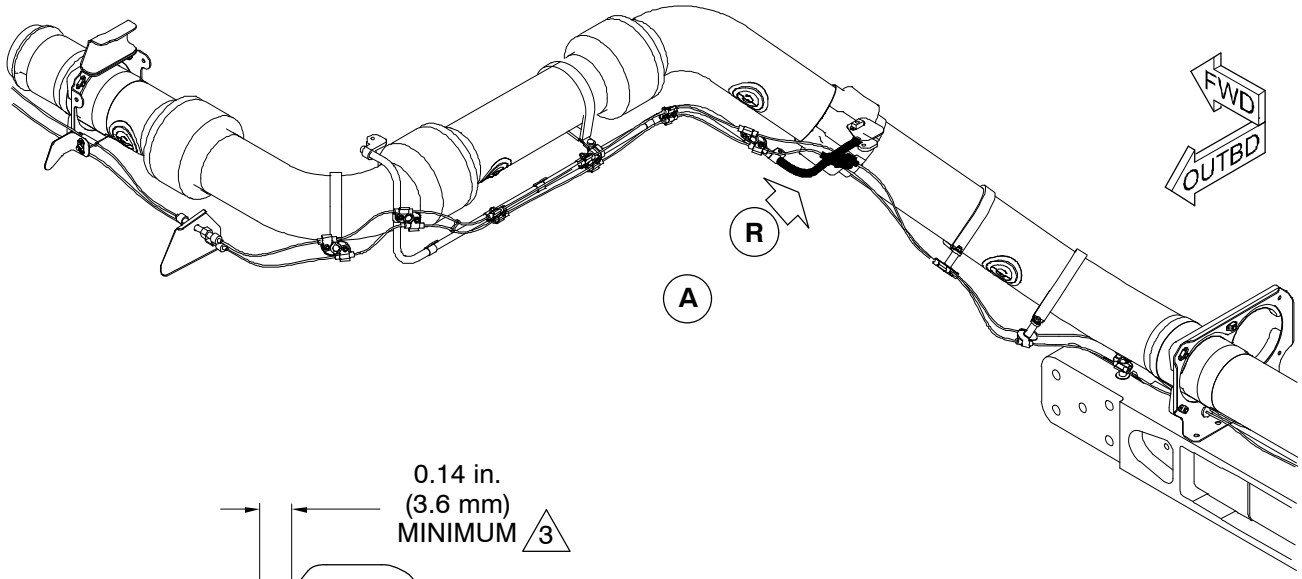

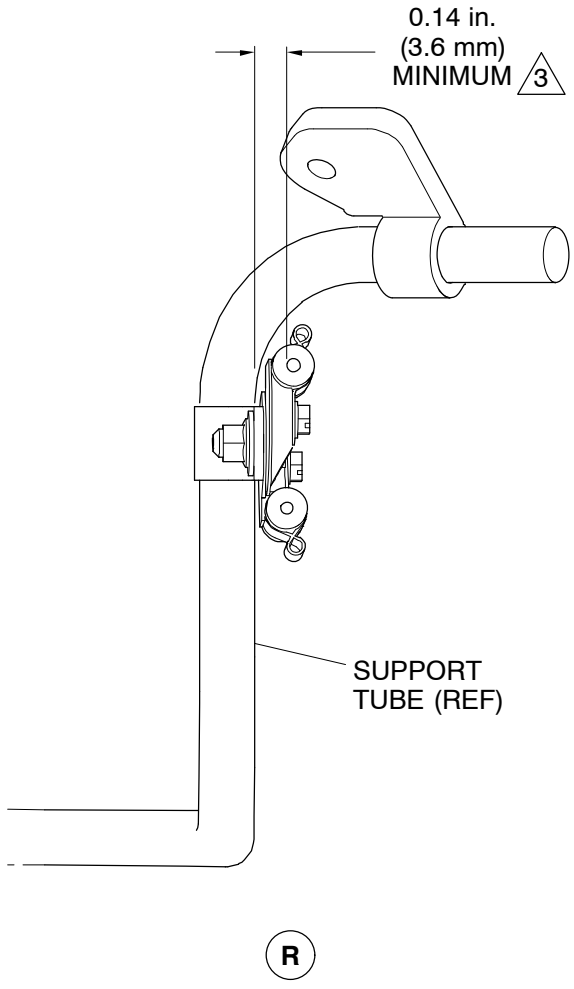

NOTES

3 Minimum distance between loop and sensing element support tube.

8. On a straight length of sensing element, the distance between each dual clamp or dual clamp and grommet is 8 in. (20 cm) maximum. If a conduit and a cable tie are installed in a middle position between two dual clamps or dual clamp grommet, it is permitted to have a distance between each dual clamp of more than 8 in. (20 cm) and less than 13 in. (33 cm). The installation of the conduit and the cable tie does not change the hardware installation requirements of this service bulletin.

ba6912a05, kp, Apr. 11, 2016

Installation of the New Sensing Elements (MLG Area)
Figure 8 (Sheet 5 of 7)

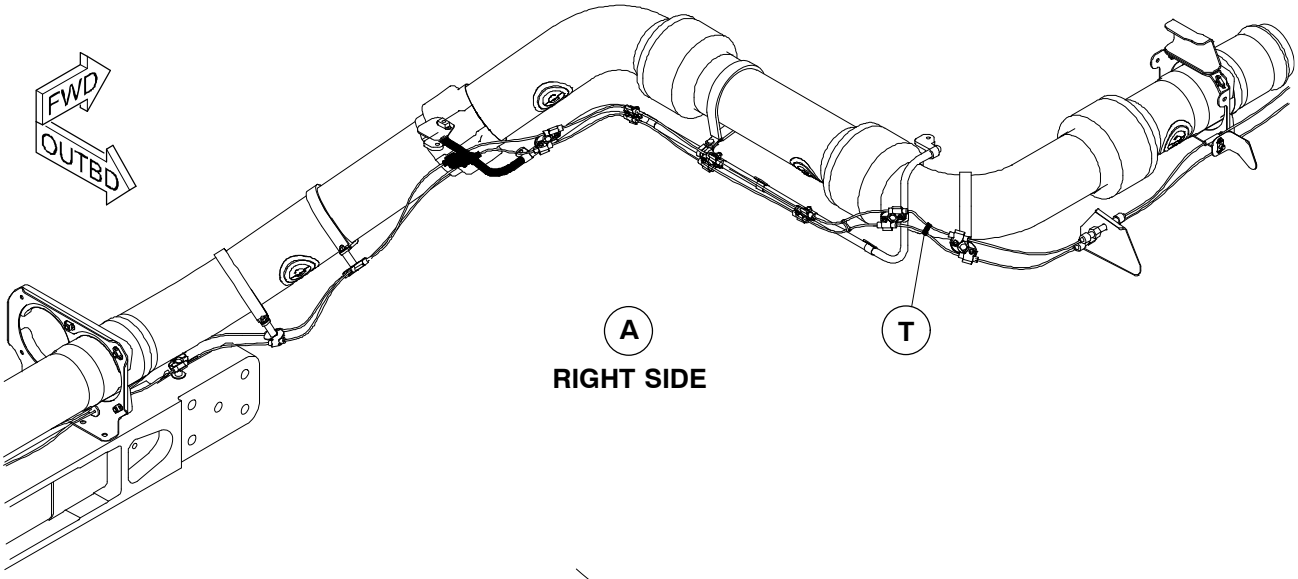

RIGHT SIDE

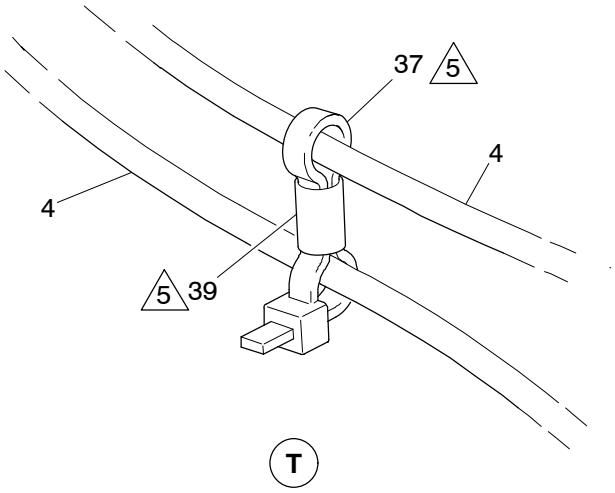

LEGEND

4. Sensing element 04–31102–M109.
37. Tiedown strap B0816019–003.
39. Conduit S10155M14.

NOTE

5 The distance between the two sensing elements to be 0.50 to 0.70 in. (12.7 to 17.8 mm).

ba6912a06, kp, Apr. 11, 2016

Installation of the New Sensing Elements (MLG Area)
Figure 8 (Sheet 6 of 7)

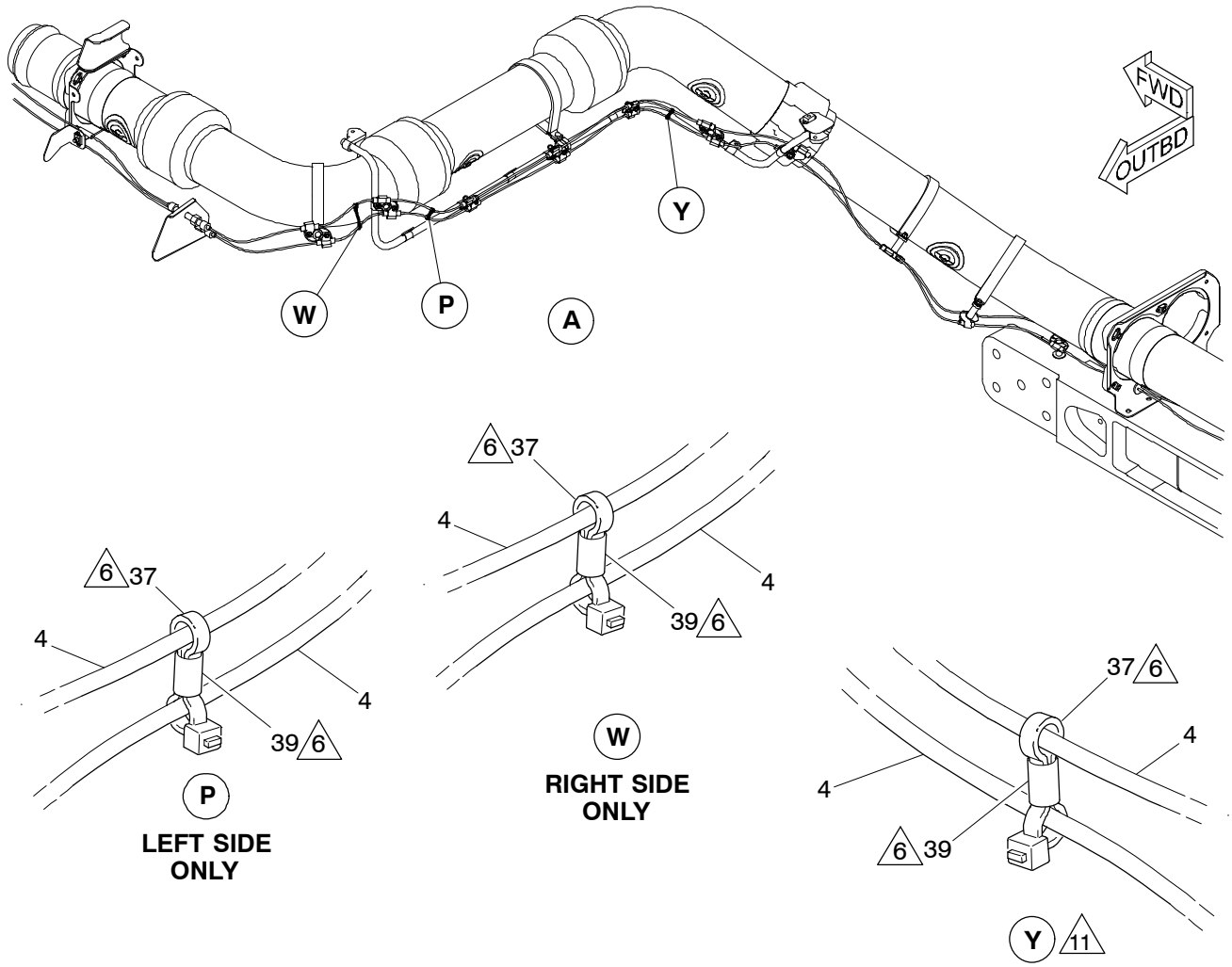

NOTES

6 The distance between the two sensing elements to be 0.50 to 0.70 in. (12.7 to 17.8 mm).

8. On a straight length of sensing element, the distance between each dual clamp or dual clamp and grommet is 8 in. (20 cm) maximum. If a conduit and a cable tie are installed in a middle position between two dual clamps or dual clamp grommet, it is permitted to have a distance between each dual clamp of more than 8 in. (20 cm) and less than 13 in. (33 cm). The installation of the conduit and the cable tie does not change the hardware requirements of this service bulletin.

11 Applicable only if the dual clamp (7) in View X is installed on the inboard side of the support tube.

LEGEND

4. Sensing element 04–311042–M109.
37. Tiedown strap B0816019–003.
39. Conduit S10155M14.

ba6912a07, kp, Aug. 4, 2016

Installation of the New Sensing Elements (MLG Area)
Figure 8 (Sheet 7 of 7)

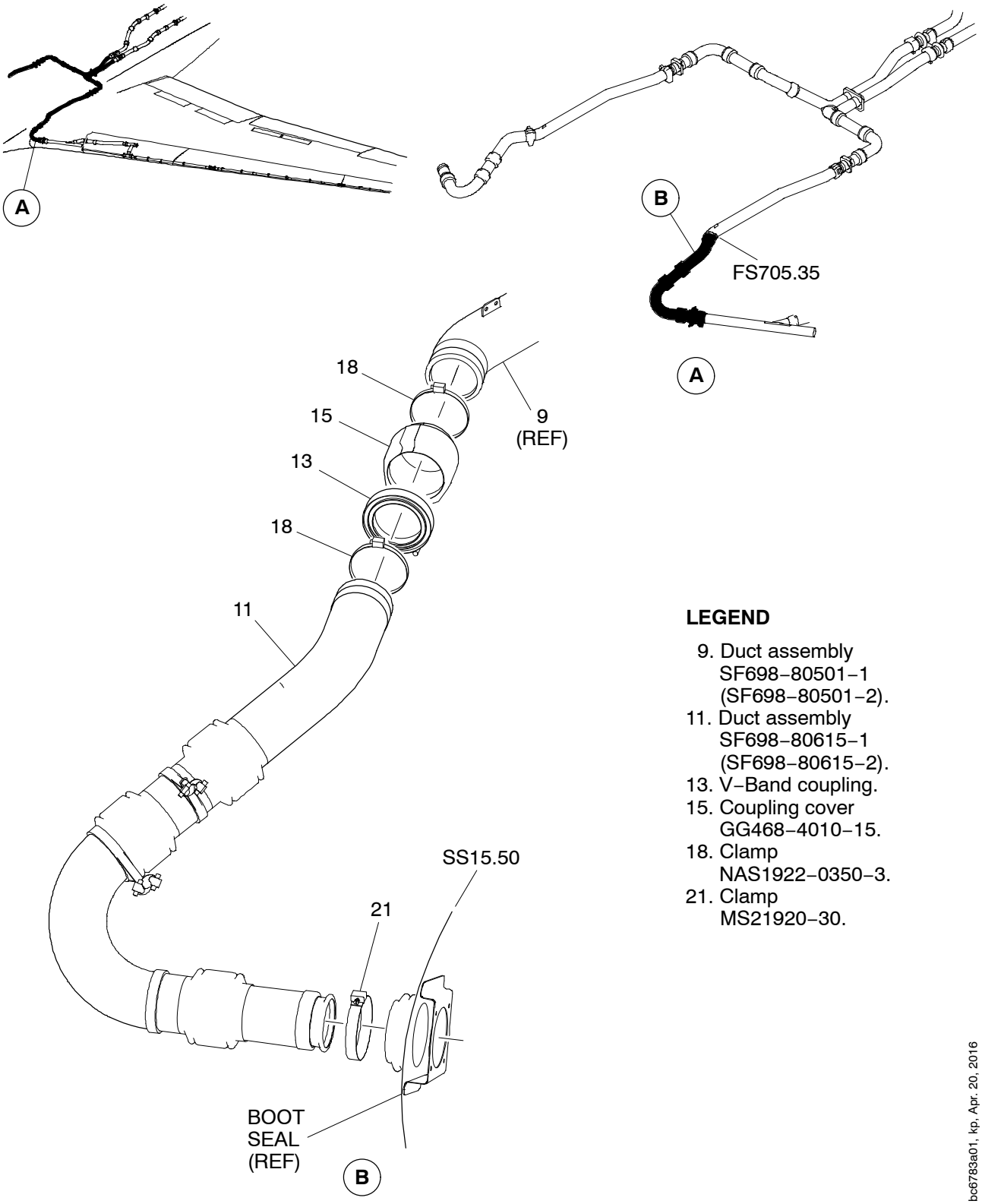

LEGEND

9. Duct assembly SF698–80501–1 (SF698–80501–2).
11. Duct assembly SF698–80615–1 (SF698–80615–2).
13. V–Band coupling.
15. Coupling cover GG468–4010–15.
18. Clamp NAS1922–0350–3.
21. Clamp MS21920–30.

bc6783a01, kp, Apr. 20, 2016

Duct Installation
Figure 9 (Sheet 1 of 4)

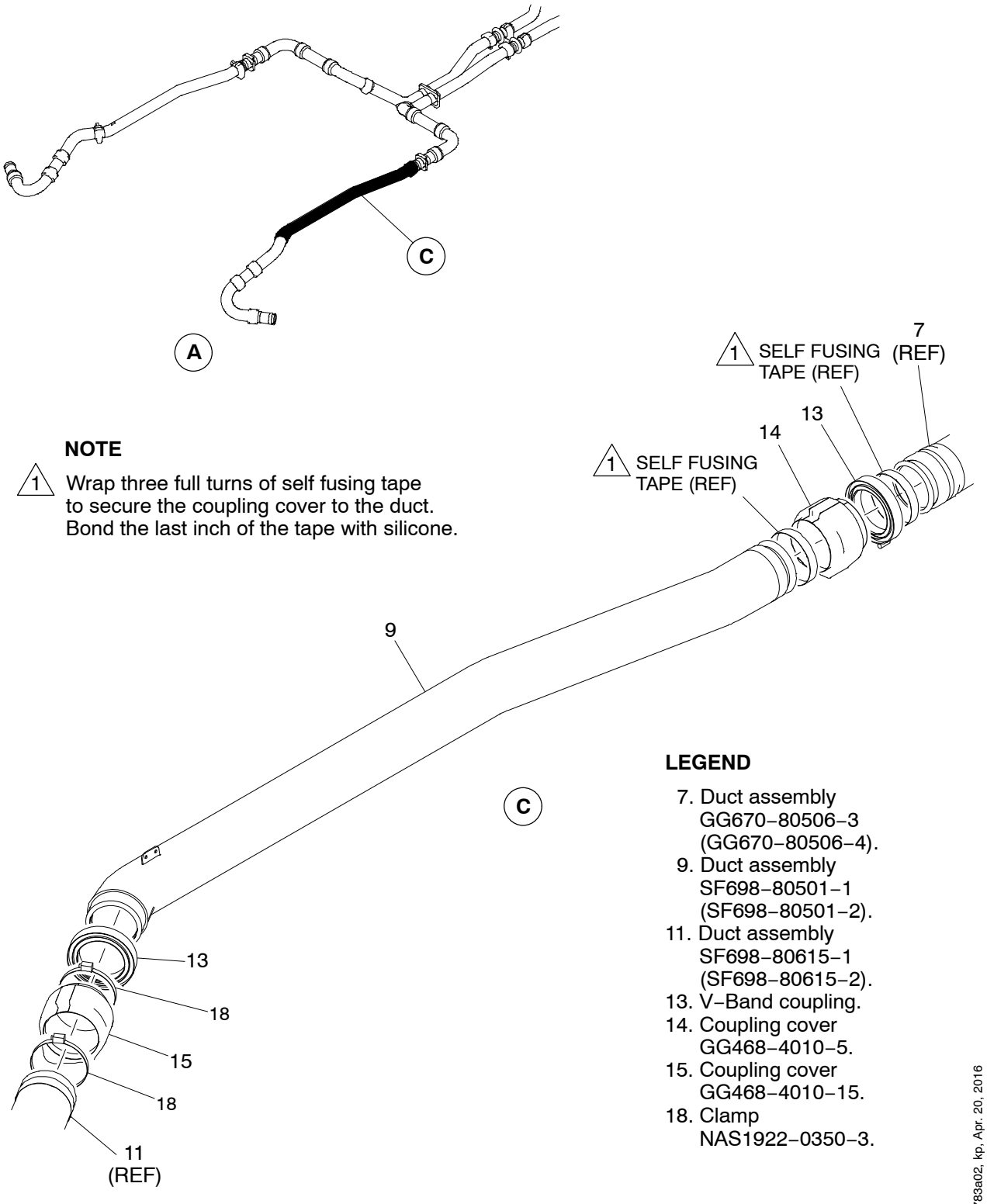

NOTE

1 Wrap three full turns of self fusing tape to secure the coupling cover to the duct. Bond the last inch of the tape with silicone.

LEGEND

7. Duct assembly GG670–80506–3 (GG670–80506–4).
9. Duct assembly SF698–80501–1 (SF698–80501–2).
11. Duct assembly SF698–80615–1 (SF698–80615–2).
13. V–Band coupling.
14. Coupling cover GG468–4010–5.
15. Coupling cover GG468–4010–15.
18. Clamp NAS1922–0350–3.

bc6783a02, kp, Apr. 20, 2016

Duct Installation
Figure 9 (Sheet 2 of 4)

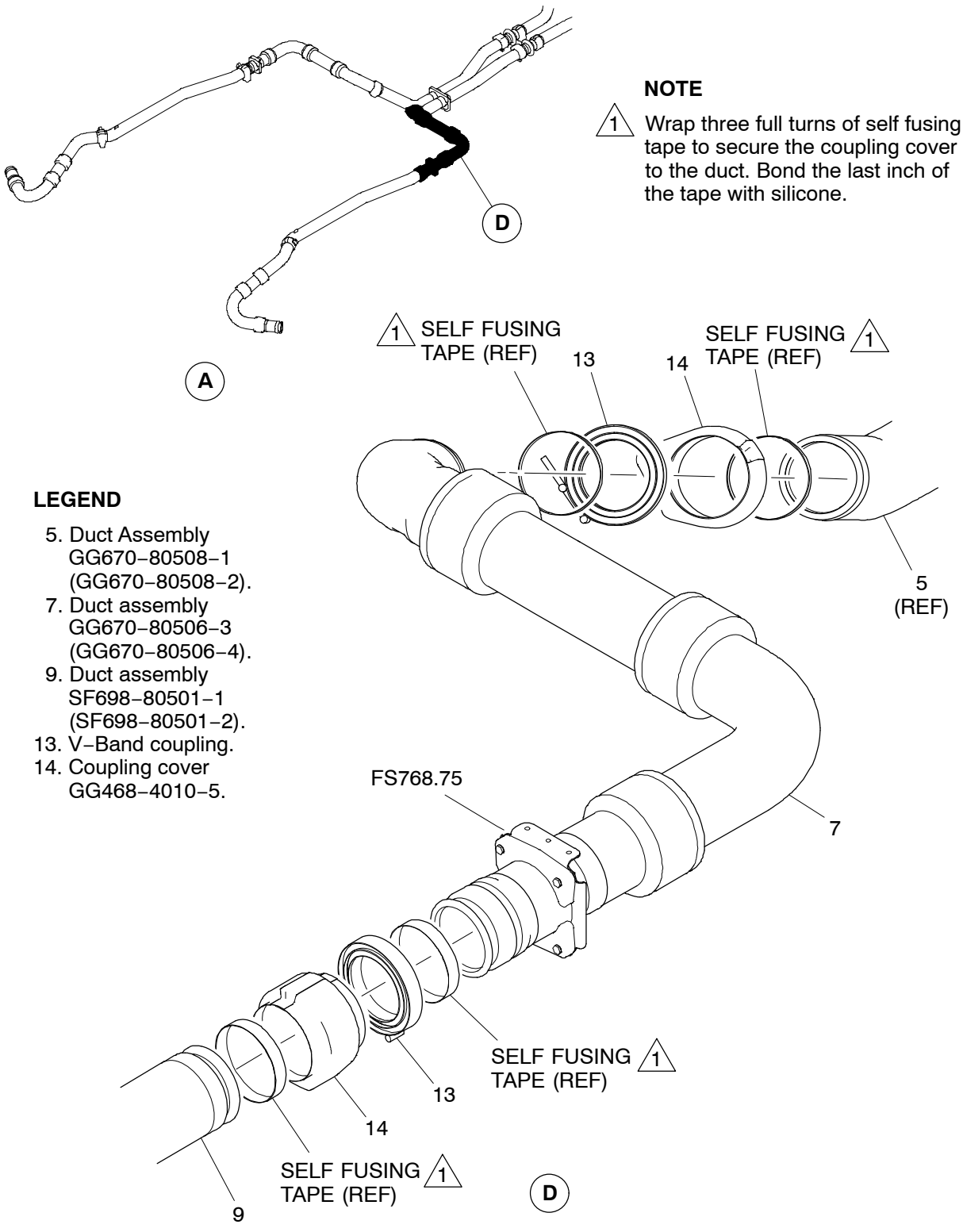

Duct Installation
Figure 9 (Sheet 3 of 4)

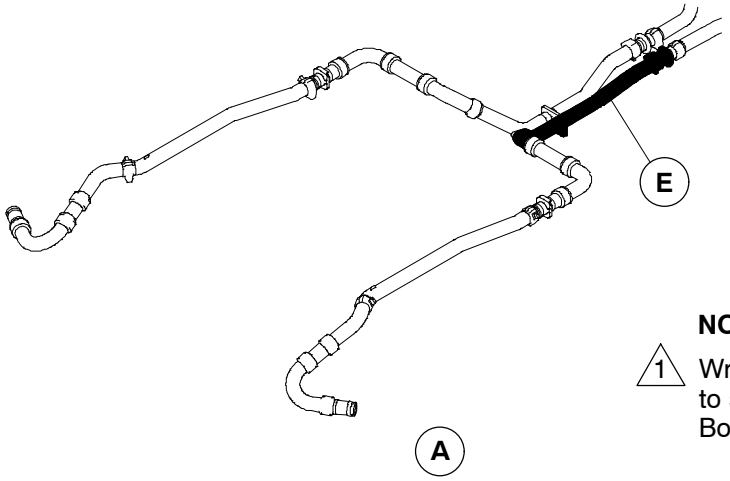

NOTE

1. Wrap three full turns of self fusing tape to secure the coupling cover to the duct. Bond the last inch of the tape with silicone.

LEGEND

5. Duct Assembly GG670–80508–1 (GG670–80508–2).
7. Duct assembly GG670–80506–3 (GG670–80506–4).
13. V–Band coupling.
14. Coupling cover GG468–4010–5.

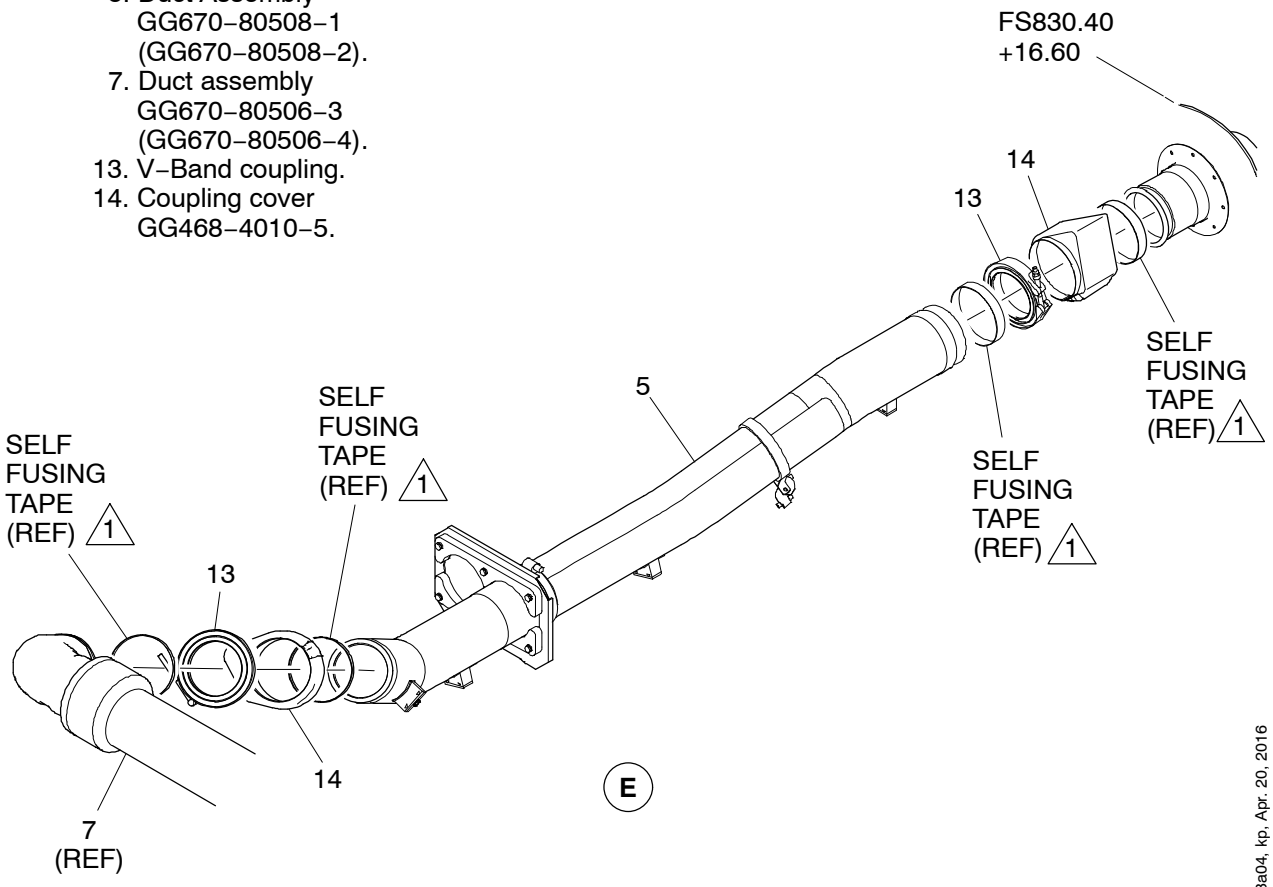

Duct Installation
Figure 9 (Sheet 4 of 4)

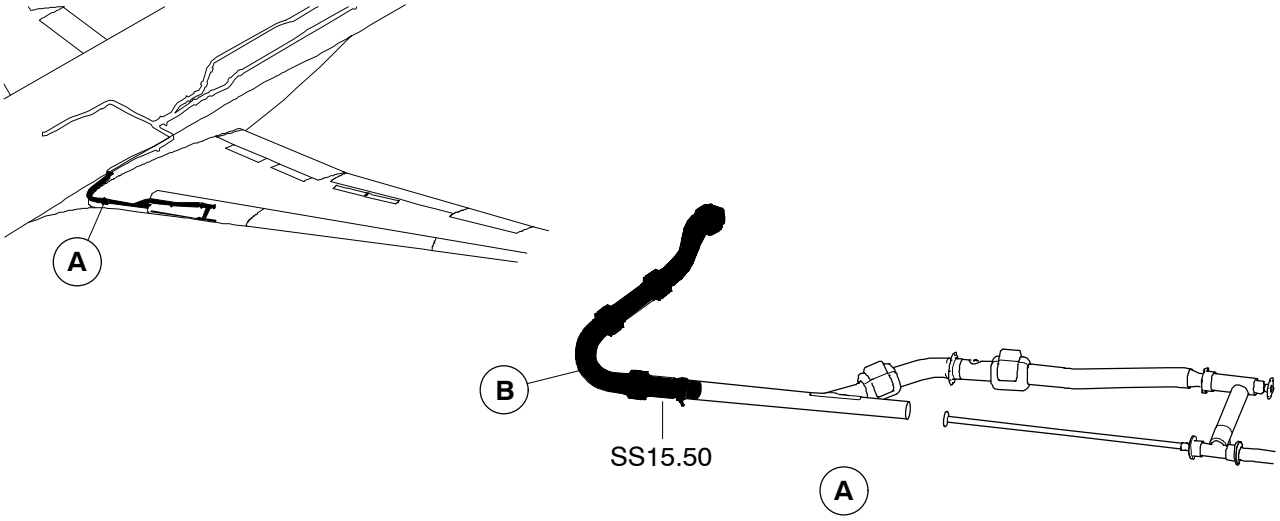

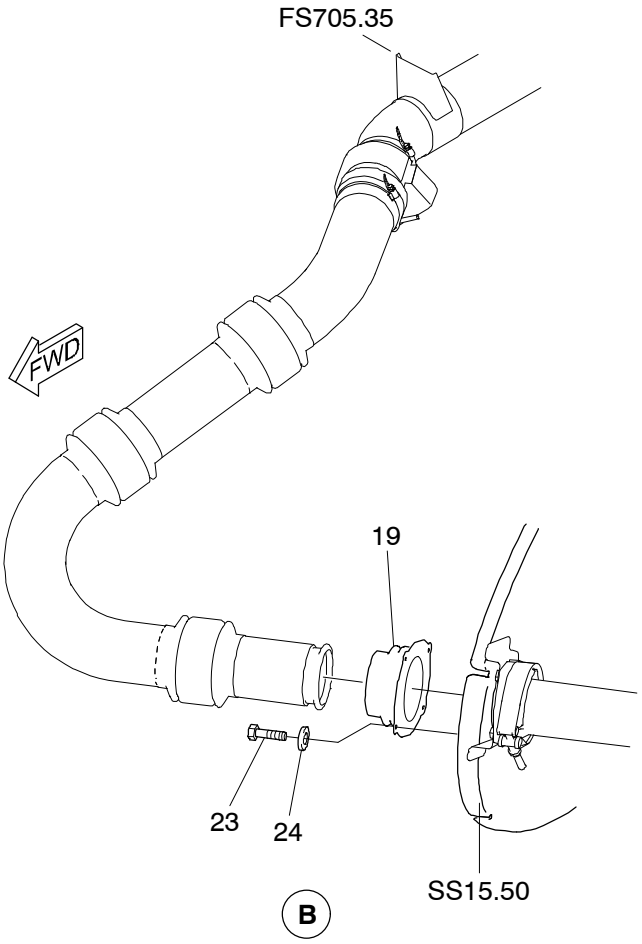

LEGEND

19. Boot seal
    CC698–80016–1 Pre–Mod
    (CC698–80016–2 Pre–Mod)
    CC670–80016–3 Post–Mod
    (CC670–80016–4 Post–Mod).
23. Bolt.
24. Washer.

bc6788a01.cgm, hr, mar16/2016

Removal/Installation of the Boot Seal
Figure 10

C. Job Close-Out

NOTE: The steps in the Job Close-Out section of this service bulletin, except for the return-to-service tests, are recommended steps. The steps give a recommendation to install components removed during the Job Set-Up. This recommendation is to make sure that the aircraft is safe and ready to return to service. Alternative steps can be used at the operator discretion.

(1) Remove all tools, equipment, and unwanted materials from the work area.

(2) Install the access panels that follow:

PANEL	NAME	REFERENCE
171AL/ 172AR	Overwing Fairing, FS697 – FS735	AMM 53–82–82–400–801
171BL/ 172BR	Overwing Fairing, FS735 – FS768	AMM 53–82–82–400–802
171CL/ 172CR	Overwing Fairing, FS768 – FS801	AMM 53–82–82–400–803
191CB/ 192CB	Forward–Fairing Access Panel	AMM 53–42–32–400–801

(3) Remove the tags and close the circuit breakers that follow:

CB PANEL	CB NO.	NAME
CBP–1	D7	A/ICE CONT CH A
CBP–1	K6	ACS CONT 2 CH A
CBP–1	L1	ACS CONT 1 CH A
CBP–2	J4	ACS CONT 1 CH B
CBP–2	K6	ACS R MAN
CBP–2 LOWER	T1	A/ICE CONT CH B
CBP–2 LOWER	T7	ACS CONT 2 CH B
CBP–2 LOWER	T8	ACS L MAN
CBP–2	N9	MLG BAY OVHT DET

CB PANEL	CB NO.	NAME
CBP−5	A3	APU BATT CONT

(4) Connect electrical power to the aircraft (refer to AMM 24−00?00−861−801).

(5) Install the left and right MLG wheel bins (refer to AMM 53−83−89−400−801).

(6) Do the initiation test of the bleed air leak−detection loops (refer to AMM 36−21−00−740−801).

(7) Do the leak test of the wing anti−ice ducts (refer to AMM 30−11−00−790−801).

(8) Do the operational test of the wing anti−ice control and indicating system (refer to AMM 30−12−00−710−801)

(9) When this service bulletin is completed, add the weight and balance data shown in paragraph 1.I. of this service bulletin to the Weight and Balance Manual. Under 'Description of Change' enter "Service Bulletin 670BA−36−022, Revision B, incorporated."

(10) When this service bulletin is completed, make this entry in the applicable logbook(s): "Service Bulletin 670BA−36−022, Revision B, Pneumatic − Bleed−Air Leak Detection and Warning System − Installation of New Ducts, Protective Blankets, and New Sensing Elements in the Main Landing Gear and Overwing Areas, incorporated."

3. MATERIAL INFORMATION

A. Kit Information

KIT 670BA36022K1 [1]				
PART NUMBER	**QTY**	**NAME**	**ALTERNATIVE**	**NOTES**
B0202026U1348–80	44	Teflon Washer		
B0816019–005	18	Tie Down Strap		
BA698–10016–5	1	FWD Crossover Blanket		
BA698–10016–6	1	FWD Crossover Blanket		
GG670–80026–1	1	Fuel Vent Shield		
GG670–80026–2	1	Fuel Vent Shield		
GG690–80024–1	2	Main Upper Vent Shield		
GG690–80025–1	2	Main Lower Vent Shield		
GG698–80018–1	1	FWD Over Wing Shield		
GG698–80018–2	1	FWD Over Wing Shield		
GG698–80019–1	1	MID Over Wing Shield		
GG698–80019–2	1	MID Over Wing Shield		
GG698–80020–1	1	Aft Over Wing Shield		
GG698–80020–2	1	Aft Over Wing Shield		
GG698–80021–1	1	Center Aft O/W Shield		
GG698–80022–1	1	Vent Boot Shield		
GG698–80022–2	1	Vent Boot Shield		
GG698–80031–1	4	Fuel Vent Shield		
[1] Refer to paragraph 1.G. for special terms and conditions.				

KIT 670BA36022K2 [1]				
PART NUMBER	**QTY**	**NAME**	**ALTERNATIVE**	**NOTES**
GG468−4010−15	2	Coupling Cover		
GG468−4010−5	6	Coupling Cover		
GG670−80506−3	1	LH Duct Assembly		
GG670−80506−4	1	RH Duct Assembly		
GG670−80508−1	1	LH Duct Assembly		
GG670−80508−2	1	RH Duct Assembly		
MS21920−30	2	Clamp		
NAS1922−0350−3	4	Clamp		
SF698−80501−1	1	LH Duct Assembly		
SF698−80501−2	1	RH Duct Assembly		
SF698−80615−1	1	LH Duct Assembly		
SF698−80615−2	1	RH Duct Assembly		
[1] Refer to paragraph 1.G. for special terms and conditions.				

KIT 670BA36022K3A [1]				
PART NUMBER	**QTY**	**NAME**	**ALTERNATIVE**	**NOTES**
04−31102−M109	4	Sensing Element		
04−31102−M129	4	Sensing Element		
324352	116	Grommet		
AN742D6	12	Clamp		
B0202020−3−020	11	Distance Piece		
B0202020−3−040	7	Distance Piece		
B0202020−3−060	3	Distance Piece		
B0202020−3−080	7	Distance Piece		
B0202020−3−130	3	Distance Piece		

PART NUMBER	QTY	NAME	ALTERNATIVE	NOTES
B0305042−001	24	Dual Loop Clamp		
B0816019−003	24	Tiedown Strap		
MS21042L3	48	Self Locking Nut		
MS21919DG54	26	Clamp	MS21919WDG54	
MS21919WDG6	2	Clamp	MS21919DG6	
NAS1149D0332K	61	Washer		
NAS1149E0532P	14	Washer		
NAS1801−3−10	3	Screw		
NAS1801−3−11	9	Screw		
NAS1801−3−14	7	Screw		
NAS1801−3−17	3	Screw		
NAS1801−3−20	7	Screw		
NAS1801−3−28	3	Screw		
NAS1801−3−5	5	Screw		
NAS1801−3−6	13	Screw		
NAS1801−3−7	11	Screw		
NAS1801−3−9	3	Screw		
NAS509−5C	9	Nut		
S10155M14	1	Conduit		90 Inches
S6949−3	2	Grommet		
[1] The kit can contain more hardware and/or material than necessary.				

KIT 670BA36022K4 [1]				
PART NUMBER	**QTY**	**NAME**	**ALTERNATIVE**	**NOTES**
CC670−80016−3	1	Boot Seal		
CC670−80016−4	1	Boot Seal		
[1] Refer to paragraph 1.G. for special terms and conditions.				

NOTE: For permitted alternative to superseded parts, refer to the Parts Supersession Cross References Lists at www.iflybombardier.com under Resources − Engineering Documents.

NOTE: Some parts listed in the kit content of this service bulletin are supplied in a temporary condition of supply configuration. These parts are identified with a −SB, /SB, SB or other suffix after the Bombardier engineering part number. When the parts are installed, with the instructions given in the Accomplishment Instructions of this service bulletin, the parts agree with the requirements of the engineering configuration. Refer to the SB Introduction document for more explanation.

B. Consumable Information

The materials that follow are necessary to do this service bulletin. You can order them from Bombardier or purchase them directly from industry sources. If the material is ordered from Bombardier, there can be some lead time because of the shelf life of the material.

CONSUMABLES			
SPECIFICATION	**QTY**	**NAME**	**REFERENCE**
MIL−I−22444C	As necessary	Self fusion tape 1.00 in. X 0.015 in. thick elong 25%	05−333 [1]
Not Specified	As necessary	Silicone RTV157	09−014 [1]
[1] Refer to AMM 51−31−00−992−801			

NOTE: To complete this list of consumables, refer to the different tasks that are given as references in this service bulletin.

C. Special Tools and Equipment

For a list of special tools and equipment, refer to the different tasks given as references in this service bulletin.

D. Disposition of Parts

The table that follows shows the relation between the new parts and/or modified parts to be installed during the incorporation of this service bulletin and the disposition of the affected parts from the aircraft (or spares).

PRE-SB PART NUMBER	NAME	QTY	DC	POST-SB PART NUMBER	NAME
GG670−80201−1	Sensing element	4	DIS	04−31102−M109	Sensing element
GG670−80202−1	Sensing element	4	DIS	04−31102−M129	Sensing element
BA698−10016−1 or −3	FWD Outboard Crossover Blanket	1	DIS	GG698−10016−5	FWD Crossover Blanket
BA698−10016−2 or −4	FWD Outboard Crossover Blanket	1	DIS	GG698−10016−6	FWD Crossover Blanket
GG698−80323−5	Coupling Cover	6	DIS	GG468−4010−5	Coupling Cover
GG698−80323−7 or GG698−80323−5	Coupling Cover	2	DIS	GG468−4010−15	Coupling Cover
GG698−80615−1	Supply Duct	1	DIS	SF698−80615−1	Supply Duct
GG698−80615−2	Supply Duct	1	DIS	SF698−80615−2	Supply Duct
GG698−80501−3	Supply Duct	1	DIS	SF698−80501−1	Supply Duct
GG698−80501−4	Supply Duct	1	DIS	SF698−80501−2	Supply Duct
GG698−80506−1	Supply Duct	1	DIS	GG670−80506−3	Supply Duct
GG698−80506−2	Supply Duct	1	DIS	GG670−80506−4	Supply Duct
GG698−80508−1	Supply Duct	1	DIS	GG670−80508−1	Supply Duct
GG698−80508−2	Supply Duct	1	DIS	GG670−80508−2	Supply Duct
CC698−80016−1	Boot Seal	1	DIS	CC670−80016−3	Boot Seal
CC698−80016−2	Boot Seal	1	DIS	CC670−80016−4	Boot Seal

Disposition code (DC):

DIS: Discard Part.