Number:	**767-49A0035**
Date:	January 16, 2003
Revision 2:	June 02, 2006
ATA System:	4915

SUBJECT: AIRBORNE AUXILIARY POWER - Power Plant - APU Air Intake Duct - Dripshield Modification

BOEING PROPRIETARY, CONFIDENTIAL, AND/OR TRADE SECRET

Copyright © 2003 The Boeing Company
Unpublished Work - All Rights Reserved

Boeing claims copyright in each page of this document only to the extent that the page contains copyrightable subject matter. Boeing also claims copyright in this document as a compilation and/or collective work.

This document includes proprietary information owned by The Boeing Company and/or one or more third parties. Treatment of the document and the information it contains is governed by contract with Boeing. For more information, contact The Boeing Company, P.O. Box 3707, Seattle, Washington 98124.

Boeing, 707, 717, 727, 737, 747, 757, 767, 777, BBJ, BOEING BUSINESS JET, DC-8, DC-9, DC-10, MD-10, MD-11, MD-80, MD-90, the Boeing logo and the Boeing livery are among the trademarks owned by Boeing or its subsidiaries. No intellectual property license (express or implied) is granted in connection with this document or otherwise.

BLANK PAGE

BOEING PROPRIETARY - Copyright © Unpublished Work - See page 1 for details.

Table of Contents

Revision Transmittal Sheet . . . 5
Summary . . . 7
1. PLANNING INFORMATION . . . 11
A. Effectivity . . . 11
1. Airplanes . . . 11
2. Spares Affected . . . 22
B. Concurrent Requirements . . . 22
C. Reason . . . 22
D. Description . . . 23
E. Compliance . . . 23
F. Approval . . . 24
G. Manpower . . . 24
H. Weight and Balance Changes . . . 25
I. Electrical Load Data . . . 25
J. References . . . 25
1. Existing Data: . . . 25
2. Data supplied with this Service Bulletin: . . . 25
3. Installation Drawings Used in the Preparation of this Service Bulletin: . . . 25
K. Publications Affected . . . 26
L. Interchangeability and Intermixability of Parts . . . 26
2. MATERIAL INFORMATION . . . 27
A. Material - Price and Availability. . . . 27
B. Industry Support Information . . . 27
C. Parts Necessary For Each Airplane . . . 28
1. Kits/Parts: . . . 28
2. Parts and Materials Supplied by the Operator: . . . 30
3. Parts Modified and Reidentified: . . . 30
4. Parts Removed and Not Replaced: . . . 31
D. Parts Necessary to Change Spares . . . 31
E. Special Tooling - Price and Availability. . . . 31
F. Special Tooling Necessary to do this Service Bulletin . . . 31
3. ACCOMPLISHMENT INSTRUCTIONS . . . 33
A. GENERAL INFORMATION . . . 33
B. WORK INSTRUCTIONS . . . 34
FIGURE 1: Modify The Aft Air-intake Duct Assembly . . . 35
FIGURE 2: Install Forward Brackets On The Aft Air-Intake Duct Assembly . . . 38
FIGURE 3: Install Aft Brackets On The Aft Air-Intake Duct Assembly . . . 42
FIGURE 4: Air-Intake Duct And Dripshield Installation . . . 47
APPENDIX A: WET POTTING OF INSERTS . . . 51

BOEING PROPRIETARY - Copyright © Unpublished Work - See page 1 for details.

BLANK PAGE

BOEING PROPRIETARY - Copyright © Unpublished Work - See page 1 for details.

Number:	**767-49A0035**
Date:	January 16, 2003
Revision 2:	June 02, 2006
ATA System:	4915

Revision Transmittal Sheet

SUBJECT: AIRBORNE AUXILIARY POWER - Power Plant - APU Air Intake Duct - Dripshield Modification

This revision includes all pages of the service bulletin.

COMPLIANCE INFORMATION RELATED TO THIS REVISION

No more work is necessary on airplanes changed as shown in the previous revisions of this service bulletin.

REASON FOR REVISION

The data given in Information Notice 767-49-0035 IN 02 is included in this revision. The Information Notice advised operators that it was unnecessary to remove the forward intake duct. The steps to remove the forward intake duct have been removed from the Accomplishment Instructions and from Figure 1.

Validation information has been added to the Reason and Background paragraphs.

The manpower required for the airplane rework has been reduced from 3.0 hours to 2.0 hours.

A note has been added to Figure 1 to make it easier to remove the aft air-intake duct.

A note to show the reason for the large fastener holes has been added to Figure 2.

Paragraph 1.A., Effectivity, shows changes of airplane operators. Each operator should examine the Effectivity paragraph for changes.

Vertical lines are put on the left edge of each page, except in Paragraph 1.A., Effectivity, to show the location of important changes.

Pages with no vertical lines have no important changes.

REVISION HISTORY

Original Issue:	January 16, 2003
Revision 1:	December 11, 2003
Revision 2:	June 2, 2006

BOEING PROPRIETARY - Copyright © Unpublished Work - See page 1 for details.

BLANK PAGE

BOEING PROPRIETARY - Copyright © Unpublished Work - See page 1 for details.

Number:	**767-49A0035**
Date:	January 16, 2003
Revision 2:	June 02, 2006
ATA System:	4915

Summary

SUBJECT: AIRBORNE AUXILIARY POWER - Power Plant - APU Air Intake Duct - Dripshield Modification

CONCURRENT REQUIREMENTS

None.

BACKGROUND

Boeing Service Related Problem (SRP) 767-27-0147 is related to this service bulletin.

Incorporation of this change will prevent APU air intake duct water leakage from contributing to stiff operation of the elevator pitch control system and any other related pitch control issues.

Two instances of stiff operation of the elevator pitch control system have been reported. An investigation revealed that water can occasionally leak from the joint, in the air-intake duct for the Auxiliary Power Unit (APU), aft of Station 1809.5. The water can leak from the duct joint onto the elevator center-auto-pilot servo Linear Variable Differential Transducer (LVDT).

A dripshield can be installed under the aft air-intake duct to prevent water from reaching the LVDT.

As a part of a service bulletin validation program, this change was completed on airplane VN027 by Revision 01 of this service bulletin.

ACTION (PRR B12901-029S)

The 015T1729-8 Top Kits have been placed under management control, such that one 015T1729-8 Top Kit is available to each operator to use as a first incorporation unit in order to generate a spare unit for component rework. This will minimize airplane downtime and lessen the impact to maintenance operations.

Follow accomplishment instructions under “Component Work - Aft Air-Intake Duct Assembly Modification” to rework an existing Aft Air-intake Duct assembly into the equivalent production aft Air-intake Duct assembly. Use components from the 015T1729-7 Top Kit.

Follow accomplishment instructions under “Airplane Work - Duct Replacement And Dripshield Installation” to install a new Dripshield on either a new 353T0252-11 Aft Air-intake Duct, from a 015T1729-8 Top Kit, or a reworked Aft Air-intake Duct made from a 015T1729-7 Top Kit.

BOEING PROPRIETARY - Copyright © Unpublished Work - See page 1 for details.

EFFECTIVITY

All 767airplanes, line numbers 1 through 890, except 767-400ER airplanes.

COMPLIANCE

Boeing recommends incorporation of this service bulletin at a convenient opportunity when airplane and manpower are available, not to exceed 18 months after the receipt of revision one of this service bulletin.

INDUSTRY SUPPORT INFORMATION

Boeing warranty remedies are available for airplanes in warranty as of April 27, 2001. Please refer to Paragraph 2.B., Industry Support Information.

MANPOWER

Airplanes	Total Task Hours	Elapsed Hours
Airplane Work - Duct Replacement And Dripshield Installation	2.0	2.0

Components	Total Task Hours	Elapsed Hours
Component Work - Aft Air-Intake Duct Assembly Modification	1.0	1.0

MATERIAL INFORMATION

Boeing Supplied Kits/Parts.

Refer to Paragraph 2.A., Material - Price and Availability.

BOEING PROPRIETARY - Copyright © Unpublished Work - See page 1 for details.

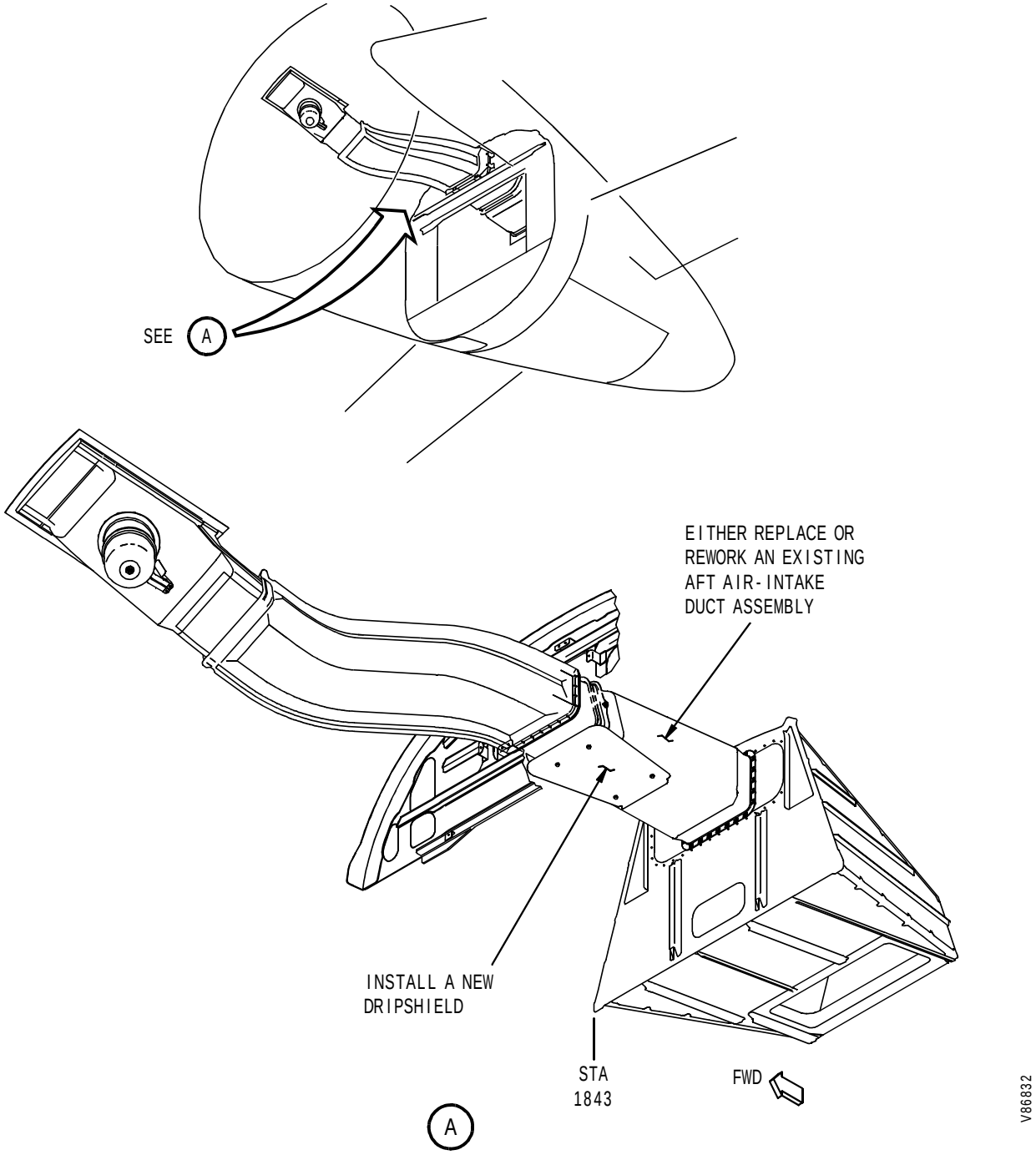

BOEING PROPRIETARY - Copyright © Unpublished Work - See page 1 for details.

BLANK PAGE

BOEING PROPRIETARY - Copyright © Unpublished Work - See page 1 for details.

Number: **767-49A0035**
Date: January 16, 2003
Revision 2: June 02, 2006
ATA System: 4915

SUBJECT: AIRBORNE AUXILIARY POWER - Power Plant - APU Air Intake Duct - Dripshield Modification

1. PLANNING INFORMATION

A. Effectivity

1. Airplanes

Refer to Service Bulletin Index Document D6-24T001 Part 3 for Airplane Variable Number, Line Number, and Serial Number data.

This service bulletin is for the airplanes shown below. An equivalent change is on subsequent production airplanes. Refer to PRR B12901-29S for data about this change.

GROUP	CONFIGURATION	DESCRIPTION
1	-	All 767airplanes, line numbers 1 through 890, except 767-400ER airplanes.

Airplane models:

767-200 767-300 767-300F

IDENTIFICATION BY CUSTOMER, CUSTOMER CODE, GROUP AND VARIABLE NUMBER

767 AIRCRAFT ONE, INC. (ONI)
1 VA510–VA512

ABX AIR (ABX)

1	VA301	VA304	VA803	VA807–VA809
	VB101–VB123	VB125	VB302	

AEROFLOT (ARO)

1	VN471–VN472	VS216–VS217	VS321–VS324	VS392

AEROMEXICO (AMX)

1	VF071–VF072	VF091	VF093	VS211

BOEING PROPRIETARY - Copyright © Unpublished Work - See page 1 for details.

AEROSVIT (UKA)
1 VN155 VN157

AEROTURBINE (AUB)
1 VB051 VB054–VB055 VB321–VB322

AIR ALGERIE (ALG)
1 VK131–VK133

AIR ATLANTA EUROPE LIMITED (AUP)
1 VB326–VB327 VL011

AIR ATLANTA ICELANDIC (AID)
1 VN153 VN557

AIR CANADA (ACN)

1	VA701–VA709	VA711–VA719	VB001–VB002	VB201–VB202
	VN051–VN054	VN056–VN062	VN531	VN536
	VN541–VN542	VN546–VN547	VN751–VN752	VN811–VN812
	VN931–VN936	VS381–VS382	VS546–VS549	

AIR CHINA (BEJ)

1	VE064	VE083–VE086	VK161–VK164	VN388
	VS206	VS208	VS274	VS307

AIR DO (HIA)
1 VS176–VS177

AIR EUROPA (ARE)
1 VN421 VS291–VS293

AIR GABON (GBN)
1 VE021

AIR MADAGASCAR (MAD)
1 VN167 VN731

AIR MAURITIUS (MAU)
1 VF001–VF002

AIR NEW ZEALAND (ANZ)
1 VN652–VN658 VS112–VS113

AIR NIUGINI (NIU)
1 VN651

AIR PACIFIC (APC)
1 VN676

AIR SAHARA (SAQ)
1 VN495

BOEING PROPRIETARY - Copyright © Unpublished Work - See page 1 for details.

AIR SEYCHELLES (ASY)
1 VL941 VS526

AIR ZIMBABWE (ZMB)
1 VF061–VF062

ALITALIA (ALI)
1 VL701–VL702 VN422–VN427 VN732 VN813
VS366–VS367 VS401

ALL NIPPON AIRWAYS (ANA)
1 VK081–VK113 VN191–VN198 VR401 VS721–VS727
VT501

AMERICAN AIRLINES (AAL)
1 VA501–VA509 VA513–VA525 VA527–VA530 VN001–VN041
VS196–VS203

ANSETT AUSTRALIA (ANS)
1 VB053

ARKEFLY (HXL)
1 VN165 VN225

ASIANA AIRLINES (AAR)
1 VK143–VK148 VR426 VW851

AUSTRALIAN AIRLINES (AUF)
1 VN089–VN092 VS486

AUSTRIAN (AUL)
1 VN242–VN243 VN671 VS301–VS303

AVIANCA (AVI)
1 VE171–VE172 VF092 VF161 VN152
VN532

AVIATION COMPANY POLET (PLF)
1 VF051

AWAS (AWW)
1 VB325

BATAVIA AIR (BTV)
1 VA806

BELAIR AIRLINES (BLB)
1 VL932

BELLVIEW AIRLINES (BEB)
1 VE125–VE126

BOEING PROPRIETARY - Copyright © Unpublished Work - See page 1 for details.

BLUE CITY HOLDING (BCY)
1 VE069

BLUE PANORAMA AIRLINES (BPA)
1 VL911 VN174 VN681 VS061

BOEING (TBC)
1 VA001

BRA TRANSPORTES AEREOS (BRW)
1 VN376

BRAVO AIRLINES (BVA)
1 VE104

BRITISH AIRWAYS (BAB)
1 VN111–VN114 VN118–VN122 VN124–VN127 VN133–VN137
VS246–VS248

CAMEROON AIRLINES (CAM)
1 VA801 VS308

CHINA EASTERN YUNNAN AIRLINES (YUN)
1 VL871–VL873

CONDOR (CDF)
1 VN683–VN691

CONTINENTAL AIRLINES (CAL)
1 VR051–VR060

CONVIASA S.A. (VSS)
1 VN500

DELTA AIR LINES (DAL)
1 VA302–VA303 VA305–VA306 VA308–VA315 VK032
VK035–VK056 VL753 VN251–VN276 VN301–VN306
VR471–VR472 VS066–VS070 VS073–VS078 VS266–VS273
VS466–VS472

EL AL ISRAEL AIRLINES (ELA)
1 VB281–VB284 VF101–VF102 VN682

ERITREAN AIR LINES (ERJ)
1 VE066 VN211

ETHIOPIAN AIRLINES (ETH)
1 VE002 VS306 VS506–VS507

ETIHAD AIRWAYS (ETI)
1 VS391

BOEING PROPRIETARY - Copyright © Unpublished Work - See page 1 for details.

EUROATLANTIC AIRWAYS (MAE)

1	VN151	VN551	VN561–VN562

EVA AIR (EVA)

1	VN791–VN792

EVERGREEN AIR CENTER (EAC)

1	VE061

FIRST CHOICE AIRWAYS (ATZ)

1	VL751–VL752	VL754	VN921

FLYJET LIMITED (FJE)

1	VE117

GE CAPITAL CORPORATION (GEF)

1	VA307	VB443	VE123

GULF AIR (GUL)

1	VL004–VL006	VN307–VN310	VN313–VN314

HAINAN AIRLINES (HNA)

1	VS426	VS496–VS497

HAWAIIAN AIRLINES (HWI)

1	VK031	VK033–VK034	VN171–VN173	VN381
	VS309–VS311	VS821	VS841	

ICELANDAIR (ICE)

1	VN158	VN163	VN537

ITOCHU CORPORATION (CIT)

1	VF181–VF184

JAL INTERNATIONAL (JAL)

1	VB371–VB373	VK001–VK016	VK021–VK022	VK181
	VK186	VR441	VR461	VS701–VS703

JET FREIGHT (JFO)

1	VE067–VE068

KALAIR (BERMUDA) (KLB)

1	VN311

KENYA AIRWAYS (KEN)

1	VK141	VL003	VS331–VS333

KLM - ROYAL DUTCH AIRLINES (KLM)

1	VL894–VL900	VS136–VS137

KRASAIR (ZXD)

1	VE001	VE022–VE023

BOEING PROPRIETARY - Copyright © Unpublished Work - See page 1 for details.

LAB (LAB)
1 VL001–VL002

LAM (LAM)
1 VF162

LAN AIRLINES (LAN)

1	VL703	VN063–VN064	VN166	VN168
	VN753	VN966–VN971	VR251	VR256–VR260
	VS111	VS131–VS133		

LOT POLISH AIRLINES (LOT)

1	VF041–VF042	VN233	VN291–VN293

MALEV HUNGARIAN AIRLINES (HGA)
1 VF171–VF172

MARTINAIR HOLLAND (MTH)

1	VN221–VN224	VN385	VN672

MAXJET AIRWAYS (SLQ)

1	VB301	VE063

MEXICANA (CMA)
1 VN154

MID EAST JET (SKL)
1 VF251

MYTRAVEL AIRWAYS (GUE)
1 VN951–VN953

NATIONWIDE AIRLINES (NWR)
1 VN556

NEOS (NEO)
1 VL892

NORTH AMERICAN AIRLINES (NNA)

1	VL755	VN922	VS316

PB AIR (PBJ)
1 VK142

PEGASUS AVIATION FINANCE (PSF)
1 VN638

PHOENIX AIRCRAFT LEASING, INC. (PLB)
1 VA810

PHOENIX AVIATION (PHX)
1 VE041

BOEING PROPRIETARY - Copyright © Unpublished Work - See page 1 for details.

PLUNA (PLU)
1 VN436

QANTAS (QAN)
1 VN081–VN088 VN093–VN099 VN115–VN117 VN123
VN130–VN132 VS186–VS187

ROYAL AIR MAROC (RAM)
1 VN636 VS336–VS337

ROYAL BRUNEI AIRLINES (RBA)
1 VN372 VN382–VN384 VN386–VN387

SAS (SAS)
1 VN156 VN164

SHANGHAI AIRLINES (SHA)
1 VK171 VR421–VR423 VS207

SHEIKH MUSTAFA EDREES (SME)
1 VA804

SKYMARK AIRLINES (SKM)
1 VN637 VS231 VS261–VS263

STAR AIR (SBJ)
1 VB323 VB328 VB441–VB442 VB444
VE101–VE103

STATE AIR COMPANY "BERKUT" (ORE)
1 VR081

TAMPA CARGO (TMP)
1 VE121–VE122 VE124

TEEBAH AIRLINES (EBH)
1 VA710

THE SULTAN'S FLIGHT (BWN)
1 VF180

THOMSONFLY (BRI)
1 VB329–VB332 VL912–VL914 VS051–VS056

TRANSAERO AIRLINES (TRX)
1 VE116 VE118 VE143 VN371
VN631–VN633

TUI AIRLINES BELGIUM (TLB)
1 VN234

BOEING PROPRIETARY - Copyright © Unpublished Work - See page 1 for details.

UNITED AIRLINES (UAL)
1 VA002–VA012 VA014–VA020 VN491–VN494 VN496–VN499
VN501–VN513 VS091–VS104

UPS (UPS)
1 VR201–VR211 VW701–VW721

US AIRWAYS (USA)
1 VE141–VE142 VE144–VE149 VE151–VE152

UZBEKISTAN AIRWAYS (UZB)
1 VL806–VL807

VARIG AIRLINES (VAR)
1 VN055 VN231–VN232

VIETNAM AIRLINES (VIE)
1 VN972

VOLARE AIRLINES (VLR)
1 VL931

YONA (IOP)
1 VN312

ZOOM AIRLINES (YFM)
1 VL891 VL893 VN634–VN635

IDENTIFICATION BY VARIABLE NUMBER

Variable	Group
VA001–VA020	1
VA301–VA315	1
VA501–VA530	1
VA701–VA719	1
VA801–VA810	1
VB001–VB002	1
VB051–VB055	1
VB101–VB125	1
VB201–VB202	1
VB251–VB253	1
VB281–VB284	1
VB301–VB302	1
VB321–VB332	1
VB371–VB373	1
VB401	1
VB441–VB444	1

BOEING PROPRIETARY - Copyright © Unpublished Work - See page 1 for details.

Variable	Group
VE001–VE003	1
VE021–VE023	1
VE041–VE043	1
VE061–VE069	1
VE083–VE086	1
VE101–VE104	1
VE116–VE118	1
VE121–VE126	1
VE141–VE152	1
VE171–VE172	1
VF001–VF002	1
VF041–VF042	1
VF051	1
VF061–VF062	1
VF071–VF072	1
VF091–VF093	1
VF101–VF102	1
VF161–VF162	1
VF171–VF172	1
VF180–VF184	1
VF251	1
VK001–VK016	1
VK021–VK022	1
VK031–VK056	1
VK081–VK113	1
VK131–VK133	1
VK141–VK148	1
VK161–VK164	1
VK171	1
VK181	1
VK186	1
VL001–VL006	1
VL011	1
VL701–VL703	1
VL751–VL755	1
VL806–VL807	1
VL871–VL873	1
VL891–VL900	1
VL911–VL914	1

BOEING PROPRIETARY - Copyright © Unpublished Work - See page 1 for details.

Variable	Group
VL931–VL932	1
VL941	1
VN001–VN041	1
VN051–VN064	1
VN081–VN099	1
VN111–VN127	1
VN130–VN137	1
VN151–VN158	1
VN163–VN168	1
VN171–VN174	1
VN191–VN198	1
VN211–VN212	1
VN221–VN225	1
VN231–VN234	1
VN241–VN243	1
VN251–VN276	1
VN291–VN293	1
VN301–VN314	1
VN371–VN372	1
VN376	1
VN381–VN388	1
VN421–VN427	1
VN436	1
VN471–VN472	1
VN491–VN513	1
VN531–VN532	1
VN536–VN537	1
VN541–VN542	1
VN546–VN547	1
VN551	1
VN556–VN557	1
VN561–VN562	1
VN631–VN638	1
VN651–VN658	1
VN671–VN672	1
VN676	1
VN681–VN691	1
VN731–VN732	1
VN751–VN753	1

BOEING PROPRIETARY - Copyright © Unpublished Work - See page 1 for details.

Variable	Group
VN791–VN792	1
VN811–VN813	1
VN921–VN922	1
VN931–VN936	1
VN951–VN953	1
VN966–VN972	1
VR051–VR060	1
VR081	1
VR201–VR211	1
VR251	1
VR256–VR260	1
VR401	1
VR421–VR423	1
VR426	1
VR441	1
VR461	1
VR471–VR472	1
VS051–VS056	1
VS061	1
VS066–VS070	1
VS073–VS078	1
VS091–VS104	1
VS111–VS113	1
VS131–VS133	1
VS136–VS137	1
VS176–VS177	1
VS186–VS187	1
VS196–VS203	1
VS206–VS208	1
VS211	1
VS216–VS217	1
VS231	1
VS246–VS248	1
VS261–VS263	1
VS266–VS274	1
VS291–VS293	1
VS301–VS303	1
VS306–VS311	1
VS316	1

BOEING PROPRIETARY - Copyright © Unpublished Work - See page 1 for details.

Variable	Group
VS321–VS324	1
VS331–VS333	1
VS336–VS337	1
VS366–VS367	1
VS381–VS382	1
VS391–VS392	1
VS401	1
VS426	1
VS466–VS472	1
VS486	1
VS496–VS497	1
VS506–VS507	1
VS526	1
VS546–VS549	1
VS701–VS703	1
VS721–VS727	1
VS821	1
VS841	1
VT501	1
VW701–VW721	1
VW851	1

2. Spares Affected

Examine your spares supply for the parts or components identified in Paragraph 2.C., Parts Necessary for Each Airplane. If any parts or components are found, refer to Paragraph 2.C. for the recommended use.

B. Concurrent Requirements

None.

C. Reason

Boeing Service Related Problem (SRP) 767-27-0147 is related to this service bulletin.

Incorporation of this change will prevent APU air intake duct water leakage from contributing to stiff operation of the elevator pitch control system and any other related pitch control issues.

Two instances of stiff operation of the elevator pitch control system have been reported. An investigation revealed that water can occasionally leak from the joint, in the air-intake duct for the Auxiliary Power Unit (APU), aft of Station 1809.5. The water can leak from the duct joint onto the elevator center-auto-pilot servo Linear Variable Differential Transducer (LVDT).

A dripshield can be installed under the aft air-intake duct to prevent water from reaching the LVDT.

BOEING PROPRIETARY - Copyright © Unpublished Work - See page 1 for details.

Revision 1 is sent to prevent an interference condition found on a production airplane. New kits, provided by this revision, allow the dripshield to be installed further away from an adjacent hydraulic tube. None of the original Top kits 015T1729-1 and -2 were shipped to operators. Top kits 015T1729-1 and -2 have been replaced by Top kits 015T1729-7 and -8 respectively. The dripshield 353T0263-1, contained in the original top kits, has been replaced by dripshield 353T0263-2.

The compliance time was changed to add "not to exceed 18 months after the receipt of revision one of this service bulletin."

This revision also provides after rework part numbers for existing Aft Air-intake ducts that are reworked by this service bulletin and do not have a production equivalent after rework part number.

Revision 2 is sent to incorporate the intent of 767-49A0035R01, IN02. The steps to remove the forward intake duct have been removed from the Accomplishment Instructions and from Figure 1. Validation information has been added to the Reason and Background paragraphs. The manpower required for the airplane rework has been reduced from 3.0 hours to 2.0 hours. A note has been added to Figure 1 to make it easier to remove the aft air-intake duct. A note to show the reason for the large fastener holes has been added to Figure 2.

As a part of a service bulletin validation program, this change was completed on airplane VN027 by Revision 01 of this service bulletin.

D. Description

The 015T1729-8 Top Kits have been placed under management control, such that one 015T1729-8 Top Kit is available to each operator to use as a first incorporation unit in order to generate a spare unit for component rework. This will minimize airplane downtime and lessen the impact to maintenance operations.

Follow accomplishment instructions under “Component Work - Aft Air-Intake Duct Assembly Modification” to rework an existing Aft Air-intake Duct assembly into the equivalent production aft Air-intake Duct assembly. Use components from the 015T1729-7 Top Kit.

Follow accomplishment instructions under “Airplane Work - Duct Replacement And Dripshield Installation” to install a new Dripshield on either a new 353T0252-11 Aft Air-intake Duct, from a 015T1729-8 Top Kit, or a reworked Aft Air-intake Duct made from a 015T1729-7 Top Kit.

Revision 1 - No more work is necessary because no parts were available to make the change on airplanes shown in the initial release of this service bulletin.

Revision 2 - No more work is necessary on airplanes changed as shown in the previous revisions of this service bulletin.

E. Compliance

Boeing recommends incorporation of this service bulletin at a convenient opportunity when airplane and manpower are available, not to exceed 18 months after the receipt of revision one of this service bulletin.

BOEING PROPRIETARY - Copyright © Unpublished Work - See page 1 for details.

F. Approval

This service bulletin was examined by the Federal Aviation Administration (FAA). The changes specified in this service bulletin comply with the applicable regulations and are FAA approved, as well as European Aviation Safety Agency (EASA)/Joint Aviation Authorities (JAA) approved for all EASA/ JAA approved airplanes listed in the service bulletin effectivity. This service bulletin and its approval were based on the airplane in its original Boeing delivery configuration or as modified by other approved Boeing changes.

If an airplane has a non-Boeing modification or repair that affects a component or system also affected by this service bulletin, the operator is responsible for obtaining appropriate regulatory agency approval before incorporating this service bulletin.

G. Manpower

The table below shows an estimate of the task-hours necessary to do this change for each airplane. This estimate is for direct labor only, done by an experienced crew. Adjust the estimate with operator task-hour data if necessary. The estimate does not include lost time. These are some examples of lost time:

— Time to adjust to the workplace
— Time to schedule the work
— Time to examine the work
— Time to cure the materials
— Time to make the parts
— Time to find the tools.

Airplane Work - Duct Replacement And Dripshield Installation

Task	Number of Persons	Task-Hours	Elapsed Hours
Access	1	0.50	0.50
Replace Duct	1	1.0	1.0
Install Dripshield	1	0.5	0.5
Total per Airplane		2.00	2.00

Component Work - Aft Air-Intake Duct Assembly Modification

Task	Number of Persons	Task-Hours	Elapsed Hours
Change Duct	1	1.0	1.0
Total per Airplane		1.0	1.0

BOEING PROPRIETARY - Copyright © Unpublished Work - See page 1 for details.

H. Weight and Balance Changes

Top Kit	Airplane Model	Change in Weight (Pounds)	Change in Moment (Pound-Inches)
015T1729-7	767-200	+1.9	+3438.0
	767-300	+1.9	+3688.9
015T1729-8	767-200	+1.7	+3076.0
	767-300	+1.7	+3300.5

I. Electrical Load Data

Not applicable.

J. References

1. Existing Data:

   a. Engineering Change Memo PRR B12901-29S

   b. Service Related Problem (SRP) 767-SRP-27-0147

   c. 767 Maintenance Manual (AMM) Subject 49-15-01

   d. BSOPM 20-50-10

2. Data supplied with this Service Bulletin:

   None.

3. Installation Drawings Used in the Preparation of this Service Bulletin:

Drawing Number	Title
353T0252	INLET DUCT ASSY TRANSITION - AUX POWER SYSTEM
353T0200	INTAKE DUCT INSTL - AUXILIARY POWER SYSTEM

These drawings were used to prepare this service bulletin. These drawings are not necessary to make the specified changes, and are not supplied with this service bulletin. These drawings may not be applicable to all airplane configurations or operators.

BOEING PROPRIETARY - Copyright © Unpublished Work - See page 1 for details.

K. Publications Affected

Publication	Chapter-Section
767 Maintenance Manual	49-15-01
767 Illustrated Parts Catalog	49-15-01

L. Interchangeability and Intermixability of Parts

Refer to Paragraph 2.C., Parts Necessary For Each Airplane, for interchangeability and intermixability information.

BOEING PROPRIETARY - Copyright © Unpublished Work - See page 1 for details.

2. MATERIAL INFORMATION

A. Material - Price and Availability

Boeing can supply the kits shown in Paragraph 2.C., Parts Necessary For Each Airplane and Paragraph 2.D., Parts Necessary to Change Spares as shown below. If there is a limit in the quantity (QTY) of kits, a supply sequence is given by Spares. More kits become available as shown in the Reorder Lead Time (ROLT). ROLT is calculated from the date Boeing gets the purchase order

The kits are subject to the terms and conditions of the Boeing standard purchase order acknowledgment. After the Unit Price date, new price data is applicable. Prices are in United States dollars. Terms: Net 30 days.

NOTE: The 015T1729-8 Top Kits have been placed under management control, such that one 015T1729-8 Top Kit is available to each operator to use as a first incorporation unit in order to generate a spare unit for component rework. This will minimize airplane downtime and lessen the impact to maintenance operations.

Number	Name	Date	QTY	ROLT (Weeks)	Unit Price thru March 01, 2004
015T1729-7	Top Kit, Duct Rework Installation	3/25/04	14	20	$1462.00
		4/08/04	10	20	$1462.00
		4/22/04	10	20	$1462.00
		5/06/04	10	20	$1462.00
		5/20/04	10	20	$1462.00
		6/04/04	10	20	$1462.00
		6/18/04	10	20	$1462.00
		7/02/04	10	20	$1462.00
		7/19/04	10	20	$1462.00
		8/02/04	10	20	$1462.00
		8/16/04	12	20	$1462.00
015T1729-8	Top Kit, Duct Replacement Installation	3/25/04	10	19	$18985.00
		4/08/04	10	19	$18985.00
		4/22/04	10	19	$18985.00
		5/06/04	5	19	$18985.00

B. Industry Support Information

Boeing warranty remedies are available for 767 airplanes in warranty as of April 27, 2001. For man-hour reimbursement for airplanes in warranty as of that date, send a warranty claim to Boeing Commercial Airplanes Group - Warranties. The kits for airplanes in warranty as of that date will be supplied at no charge. Send a purchase order for the kits to Boeing Spares. Please refer to this service bulletin number and reference the airplane variable numbers in your purchase order.

BOEING PROPRIETARY - Copyright © Unpublished Work - See page 1 for details.

C. Parts Necessary For Each Airplane

1. Kits/Parts:

To get the kits shown below, refer to Paragraph 2.A., Material - Price and Availability.

NOTE: The 015T1729-8 Top Kits have been placed under management control, such that one 015T1729-8 Top Kit is available to each operator to use as a first incorporation unit in order to generate a spare unit for component rework. This will minimize airplane downtime and lessen the impact to maintenance operations

NOTE: One 015T1729-8 top kit is necessary for the first airplane in each operators' fleet, and one 015T1729-7 top kit and the items shown in Paragraph 2.C.2., Parts and Materials Supplied by the Operator, are necessary for all remaining airplanes in each operators' fleet.

015T1729 KIT, INTAKE DUCT, DRIPSHIELD CONVERSON - AUX. PWR. SYS.

New Part Number	QTY		Name	Existing Part Number	Notes
	-8	-7			
015T1729-7	.	-	Top Kit, Duct Rework Installation	-	(f)
015T1729-8	-	.	Top Kit, Duct Replacement Installation	-	(f)
015T1729-3	-	1	Subkit, Intake Duct, Drip Shield Conversion	-	-
353T0263-2	1	1	Dripshield	-	(b) (g)
353T0252-11	1	-	Aft Air-intake Duct Assembly	353T0252-()	(a) (b) (c) (e)
BACB30NM3K2	4	4	Bolt	-	(d)
NAS1149D0316J	4	4	Washer	-	(d)

(a) Discard or rework the existing part.

(b) The 353T0252-11 part is used in production.

(c) You can not use the existing part to replace the new or changed part without rework.

(d) If grip length shown is not available at Boeing, fasteners supplied in kits may be one grip length longer than indicated. Also, if any fasteners part numbers listed are not available or have been superseded, substitute fasteners may be supplied in kits. Boeing Document D-590 and Boeing Drawing 012T2100 are used to determine the part numbers used as substitutes.

(e) There is no production part number for the reworked Aft Air-intake Duct assembly. Use the new retrofit part numbers shown in Paragraph 2.C.3. "Parts Modified and Re-identified" to identify on the duct that it has been reworked by this service bulletin. Use BSOPM 20-50-10 part marking procedure.

(f) Revision 1 replaced Top Kits 015T1729-1 and -2 with Top Kits 015T1729-7 and -8 respectively.

(g) Revision 1 replaced dripshield 353T0263-1 with dripshield 353T0263-2.

BOEING PROPRIETARY - Copyright © Unpublished Work - See page 1 for details.

015T1729-3 SUBKIT, INTAKE DUCT, DRIPSHIELDCONVERSION - AUX. PWR. SYS.				
New Part Number	**QTY -3**	**Name**	**Existing Part Number**	**Notes**
015T1729-3	-	Subkit, Intake Duct, Drip Shield Conversion	-	-
015T1729-6	1	Mylar Template	-	-
015T1729-4	2	Bracket Assembly	353T0256-2	(a)
353T0256-6	2	Bracket Assembly	-	(b)
BACB30NM3K2	4	Bolt	-	(c)
BACB30NX5HK3	4	Bolt	-	(c)
BACC30AB5C	4	Collar	-	(c)
BACI12AC3CD	4	Insert, Blind	-	(c)
NAS1149C0332R	4	Washer	-	(c)
(a) Discard the existing part.				
(b) This part is used in production.				
(c) If grip length shown is not available at Boeing, fasteners supplied in kits may be one grip length longer than indicated. Also, if any fasteners part numbers listed are not available or have been superseded, substitute fasteners may be supplied in kits. Boeing Document D-590 and Boeing Drawing 012T1200 are used to determine the part numbers used as substitutes.				

BOEING PROPRIETARY - Copyright © Unpublished Work - See page 1 for details.

2. Parts and Materials Supplied by the Operator:

Part Number / Specification	QTY	Name	Notes
BMS 5-28, Type 18 (a)	4 Oz.	Potting Compound	-
BMS 5-28, Type 19, 20 or 30 (a)	-	Optional Potting Compound	-
(a) See the Qualified Products List at the end of the Boeing Material Specification (BMS) for supplier data.			

3. Parts Modified and Reidentified:

The parts shown below are changed as shown in this service bulletin. The quantity (QTY) is the number of parts changed on each airplane.

Existing Part Number	QTY	Name	New Part Number	Notes
353T0252- 1	1	Aft Air-intake Duct Assembly	015T1729-9	(a) (b) (c)
353T0252- 5	1	Aft Air-intake Duct Assembly	015T1729-10	(a) (b) (c)
353T0252- 6	1	Aft Air-intake Duct Assembly	015T1729-11	(a) (b) (c)
353T0252- 8	1	Aft Air-intake Duct Assembly	015T1729-12	(a) (b) (c)
353T0252- 9	1	Aft Air-intake Duct Assembly	015T1729-13	(a) (b) (c)
(a) Make the change given in this service bulletin. (b) The 015T1729-( ) retrofit part numbers shown are the new part numbers after the duct is reworked by the change given in this service bulletin. Use BSOPM 20-50-10 part marking procedure. (c) The 353T0252-11 duct part number is used in production.				

BOEING PROPRIETARY - Copyright © Unpublished Work - See page 1 for details.

4. Parts Removed and Not Replaced:

Existing Part Number	Name	QTY	Notes
353T0256-2	Bracket Assembly	2	-

D. Parts Necessary to Change Spares

To get the kit shown below, refer to Paragraph 2.A., Material - Price and Availability.

Part Number	Name	QTY
015T1729-3	Subkit, Intake Duct, Drip Shield Conversion	1

E. Special Tooling - Price and Availability

None

F. Special Tooling Necessary to do this Service Bulletin

No special tools or equipment are necessary to do the change in this service bulletin except Mylar Template 015T1729-6, provided in subkit 015T1729-3, and maintenance and overhaul tools in the manuals given in Paragraph 1.J., References, can be necessary. Examine operator tool supply to make sure all necessary tools are available.

BOEING PROPRIETARY - Copyright © Unpublished Work - See page 1 for details.

BLANK PAGE

BOEING PROPRIETARY - Copyright © Unpublished Work - See page 1 for details.

3. ACCOMPLISHMENT INSTRUCTIONS

A. GENERAL INFORMATION

NOTE:

1. Use sufficient precautions to make sure that the system components, airplane electrical wires and structures, are not damaged by drills, metal shavings and other contamination while you do work. Metal shavings or contamination left in the airplane can touch wire bundles and cause chafing damage to electrical wires. Chafed wires can cause arcing damage.

2. Manual titles are referred to by acronyms. Refer to Paragraph 1.J., References, for definition of the acronyms.

3. Obey all of the warnings and cautions given in the specified manual sections.

4. The work instructions are divided into work packages. Task-Hours and Elapsed-Hours for each package are given in Paragraph 1.G., Manpower. You can do each work package independently.

5. Unless shown differently, these dimensions and tolerances are used:
   — Linear dimensions are in inches
   — Tolerance on linear dimensions, other than rivet and bolt edge margins, is plus or minus 0.03 inch.
   — Tolerance on rivet and bolt edge margin is plus or minus 0.05 inch
   — Hole dimensions for standard solid rivets are given in 767 Structural Repair Manual, Chapter 51
   — Torque limits to tighten nuts and bolts are given in 767 Structural Repair Manual, Chapter 51.

6. For approved fastener and process material substitutions, refer to 767 Structural Repair Manual, Chapter 51, Alternate fasteners are given in 767 Structural Repair Manual Chapter 51 and Boeing Drawing 012T2100.

7. If the length of fasteners specified in this service bulletin do not meet the installation standards, fasteners of the same specification, or an approved substitute, one grip length longer or shorter may be used

8. The 015T1729-8 Top Kits have been placed under management control, such that one 015T1729-8 Top Kit is available to each operator to use as a first incorporation unit in order to generate a spare unit for component rework. This will minimize airplane downtime and lessen the impact to maintenance operations.

9. The work instructions are divided into two instruction packages: The “Airplane Work - Duct Replacement and Dripshield Installation” and the “Component Work - Aft Air-Intake Duct Assembly Modification” instructions.

   Follow accomplishment instructions under “Component Work - Aft Air-intake Duct Assembly Modification” to rework an existing Aft Air-intake Duct assembly into the equivalent production aft Air-intake Duct assembly. Use components from the 015T1729-7 Top Kit.

BOEING PROPRIETARY - Copyright © Unpublished Work - See page 1 for details.

Follow accomplishment instructions under “Airplane Work - Duct Replacement And Dripshield Installation” to install a new Dripshield on either a new 353T0252-11 Aft Air-intake Duct, from a 015T1729-8 Top Kit, or a reworked Aft Air-intake Duct made from a 015T1729-7 Top Kit.

B. WORK INSTRUCTIONS

Airplane Work - Duct Replacement And Dripshield Installation

1. Get access and remove the aft Air-intake duct components from the airplane:

    a. On the first airplane in each operators’ fleet, use 767 AMM 49-15-01 instructions to get access and remove the aft Air-intake duct components from the airplane.

    b. On all remaining airplanes in each operators’ fleet, get access and remove the aft Air-intake duct components from the airplane as shown in Figure 1.

2. Install an aft Air-intake Duct assembly and a Dripshield on the airplane as shown in Figure 4:

    a. On the first airplane in each operators’ fleet, install a new aft Air-intake Duct assembly 352T0252-11, from the 015T1729-8 Top Kit.

    b. On all remaining airplanes in each operators’ fleet, install a reworked aft Air-intake Duct assembly, made from a 015T1729-7 Top Kit.

        Rework the aft Air-intake Duct assembly by following the “Component Work - Aft Air-Intake Duct Assembly Modification” instructions below.

Component Work - Aft Air-Intake Duct Assembly Modification

1. Replace the two forward brackets, located on the bottom of the aft Air-intake Duct assembly, as shown in Figure 2.

2. Install two aft brackets, on the bottom of the aft Air-intake Duct assembly, as shown in Figure 3.

BOEING PROPRIETARY - Copyright © Unpublished Work - See page 1 for details.

FIGURE 1: Modify The Aft Air-intake Duct Assembly

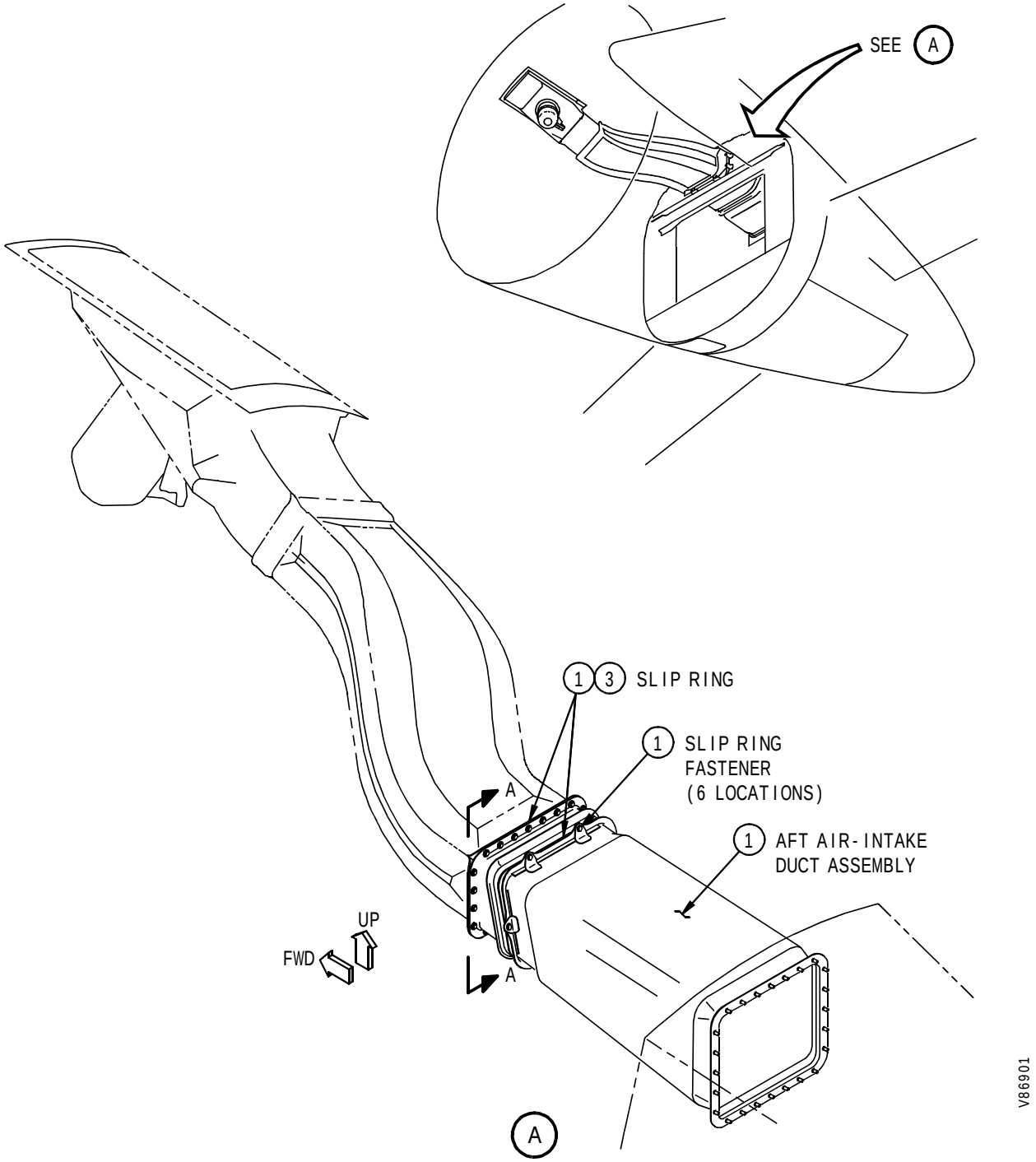

FIGURE 1: Modify The Aft Air-intake Duct Assembly (SHEET 1 OF 3)

BOEING PROPRIETARY - Copyright © Unpublished Work - See page 1 for details.

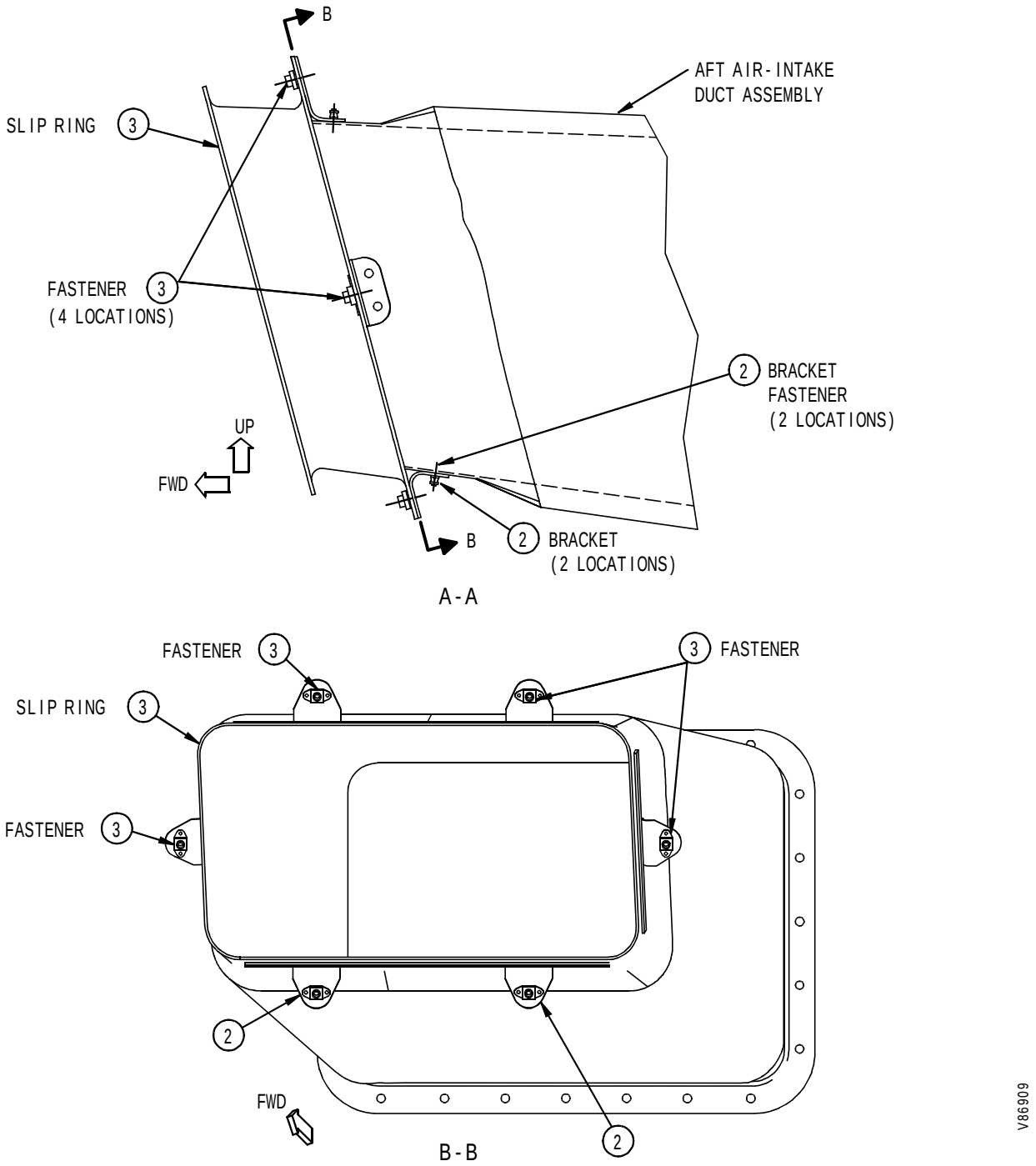

FIGURE 1: Modify The Aft Air-intake Duct Assembly
(SHEET 2 OF 3)

BOEING PROPRIETARY - Copyright © Unpublished Work - See page 1 for details.

The step numbers shown below agree with the numbers shown in the circle symbols in the figure. The QTY numbers shown below are the total number of parts necessarily for each step.

STEP	TASK	NAME	PART NUMBER	QTY	NOTES
1	Remove	Aft Air-intake Duct Assembly	-	1	keep. Use 767 AMM 49-15-01
		Slip Ring	-	1	keep
		Slip Ring Fastener	-	6	keep
NOTE: Remove the fasteners and sealant from the aft end of the duct. Remove the 6 fasteners that connect the aft air-intake duct to the slip ring. Push the slip ring slightly forward. Shake the aft duct until it becomes loose and drops down.					
2		Bracket	253T0256-2	2	discard
		Bracket Fastener	-	2	keep
3	Re-install	Slip Ring	-	1	kept
		Slip Ring Fastener	-	4	of 6 kept. Keep remaining two slip ring fasteners for installation later.

FIGURE 1: Modify The Aft Air-intake Duct Assembly
(SHEET 3 OF 3)

BOEING PROPRIETARY - Copyright © Unpublished Work - See page 1 for details.

FIGURE 2: Install Forward Brackets On The Aft Air-Intake Duct Assembly

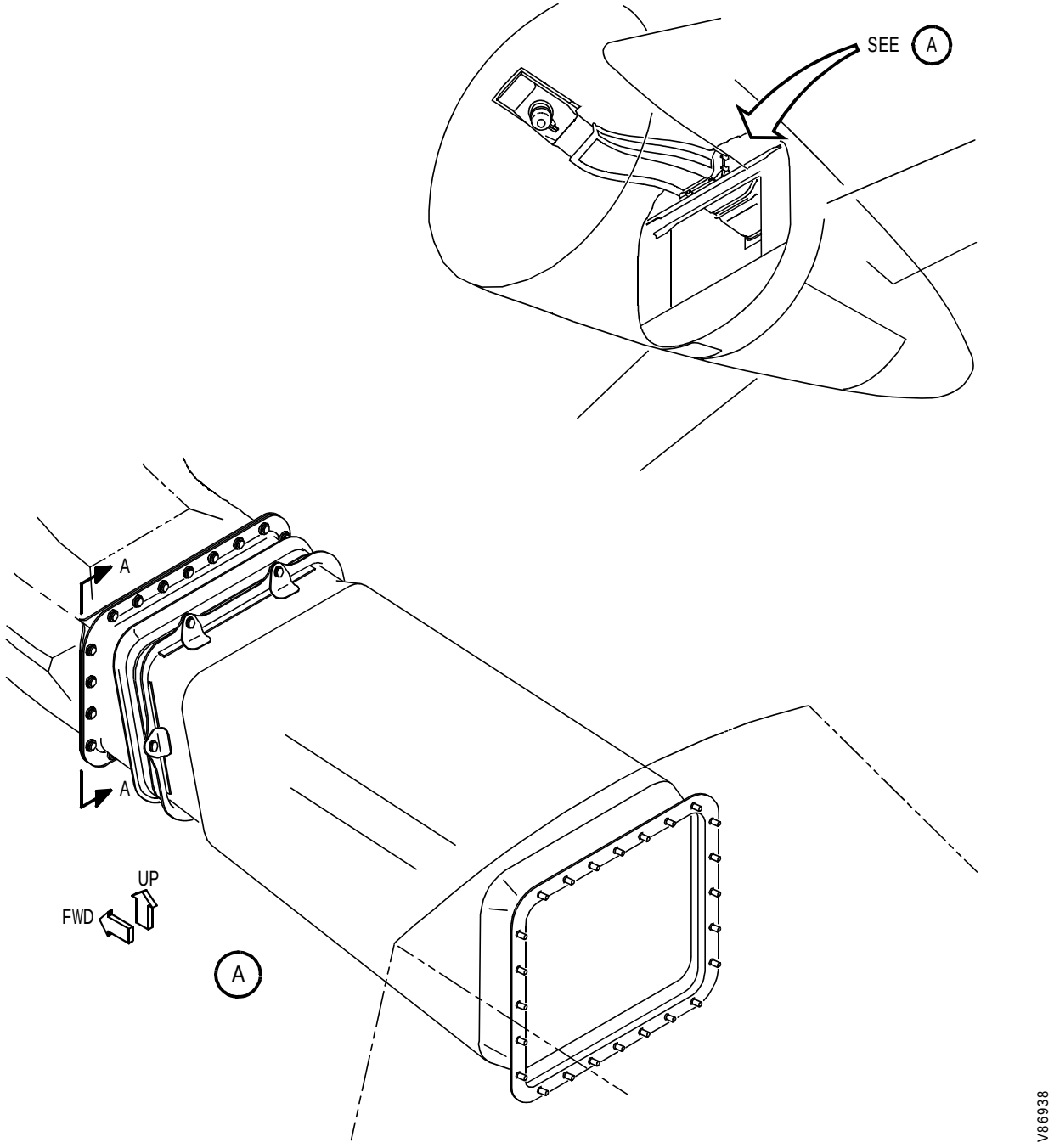

FIGURE 2: Install Forward Brackets On The Aft Air-Intake Duct Assembly
(SHEET 1 OF 4)

BOEING PROPRIETARY - Copyright © Unpublished Work - See page 1 for details.

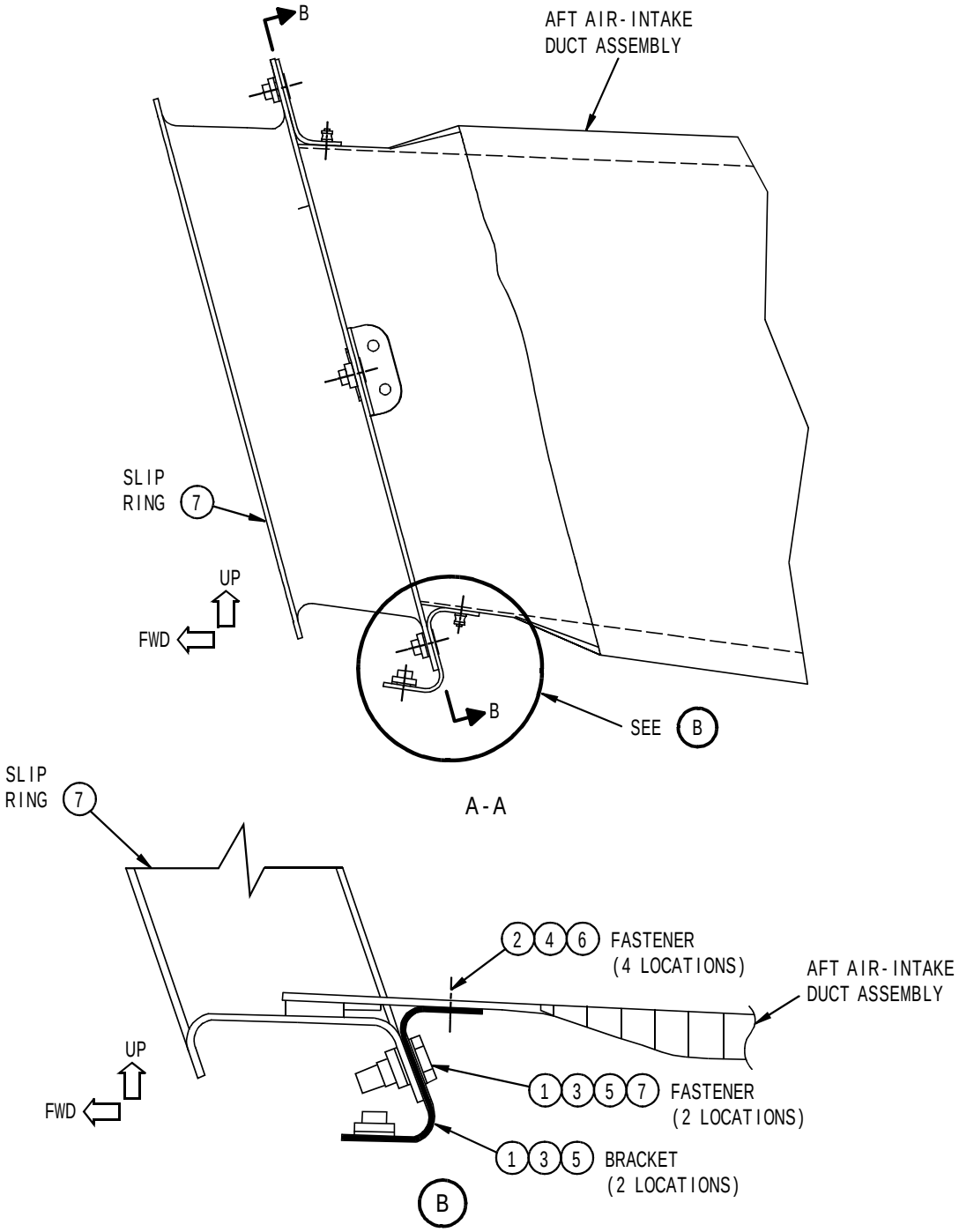

FIGURE 2: Install Forward Brackets On The Aft Air-Intake Duct Assembly
(SHEET 2 OF 4)

BOEING PROPRIETARY - Copyright © Unpublished Work - See page 1 for details.

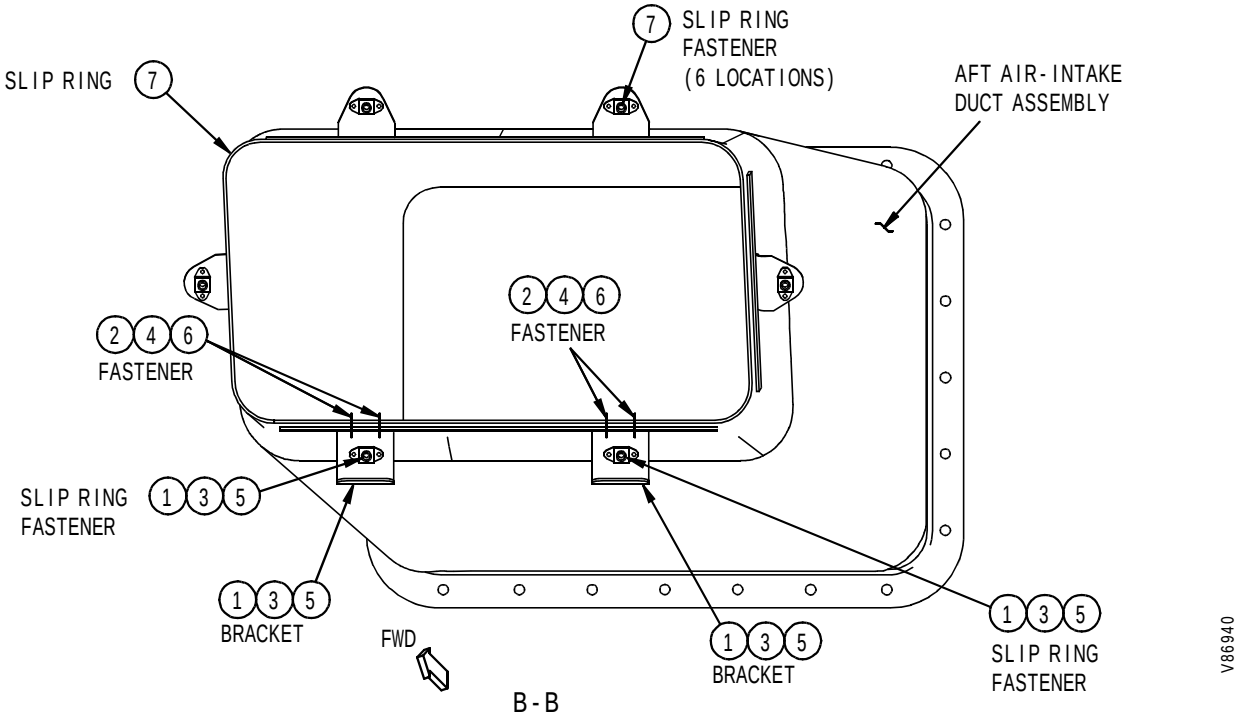

The step numbers shown below agree with the numbers shown in the circle symbols in the figure. The QTY numbers shown below are the total number of parts necessary for each step.

NOTE: Use components from the 015T1729-7 Top Kit.

STEP	TASK	NAME	PART NUMBER	QTY	NOTES
1	Install	Bracket Assembly	015T1729-4	2	on Slip Ring
		Slip Ring Fastener	-	2	kept
2	Mark	Fastener Hole	-	4	locations on brackets. Use holes in aft air-intake duct as a guide
3	Remove	Bracket Assembly	015T1729-4	2	temporarily and keep
		Slip Ring Fastener	-	2	temporarily and keep
4	Drill	Fastener Hole	-	4	0.192 to 0.202 inch diameter. Two in each bracket. These fastener holes are larger then normal. The larger hole allows for some adjustment of the bracket.
5	Install	Bracket Assembly	015T1729-4	2	loose on Slip Ring
		Slip Ring Fastener	-	2	kept

FIGURE 2: Install Forward Brackets On The Aft Air-Intake Duct Assembly
(SHEET 3 OF 4)

BOEING PROPRIETARY - Copyright © Unpublished Work - See page 1 for details.

STEP	TASK	NAME	PART NUMBER	QTY	NOTES
6	Install	Bolt	BACB30NX5HK3	4	-
		Collar	BACC30AB5C	4	-
7	Remove	Slip Ring	-	1	keep
		Slip Ring Fastener	-	6	keep

FIGURE 2: Install Forward Brackets On The Aft Air-Intake Duct Assembly
(SHEET 4 OF 4)

BOEING PROPRIETARY - Copyright © Unpublished Work - See page 1 for details.

FIGURE 3: Install Aft Brackets On The Aft Air-Intake Duct Assembly

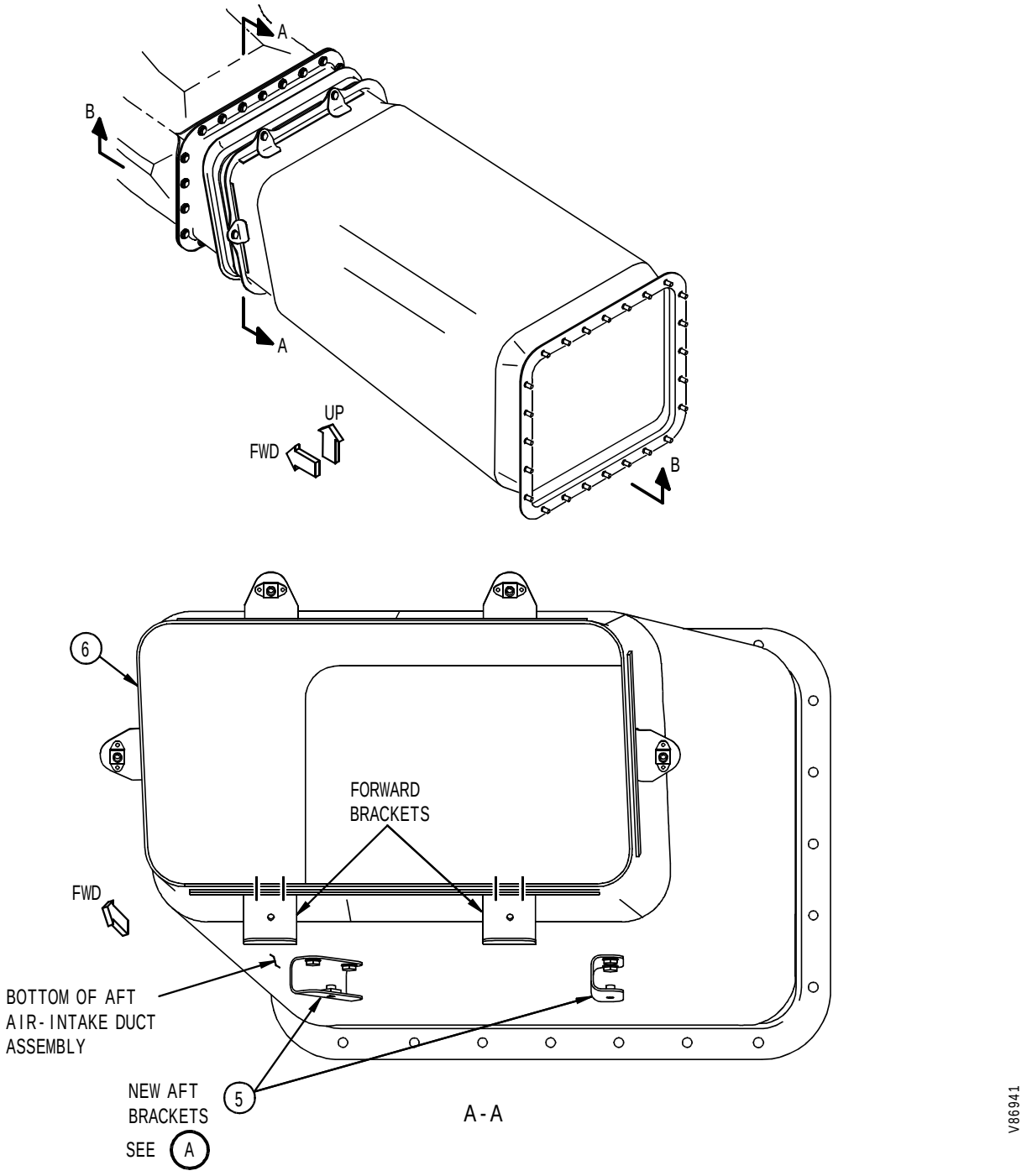

FIGURE 3: Install Aft Brackets On The Aft Air-Intake Duct Assembly
(SHEET 1 OF 5)

BOEING PROPRIETARY - Copyright © Unpublished Work - See page 1 for details.

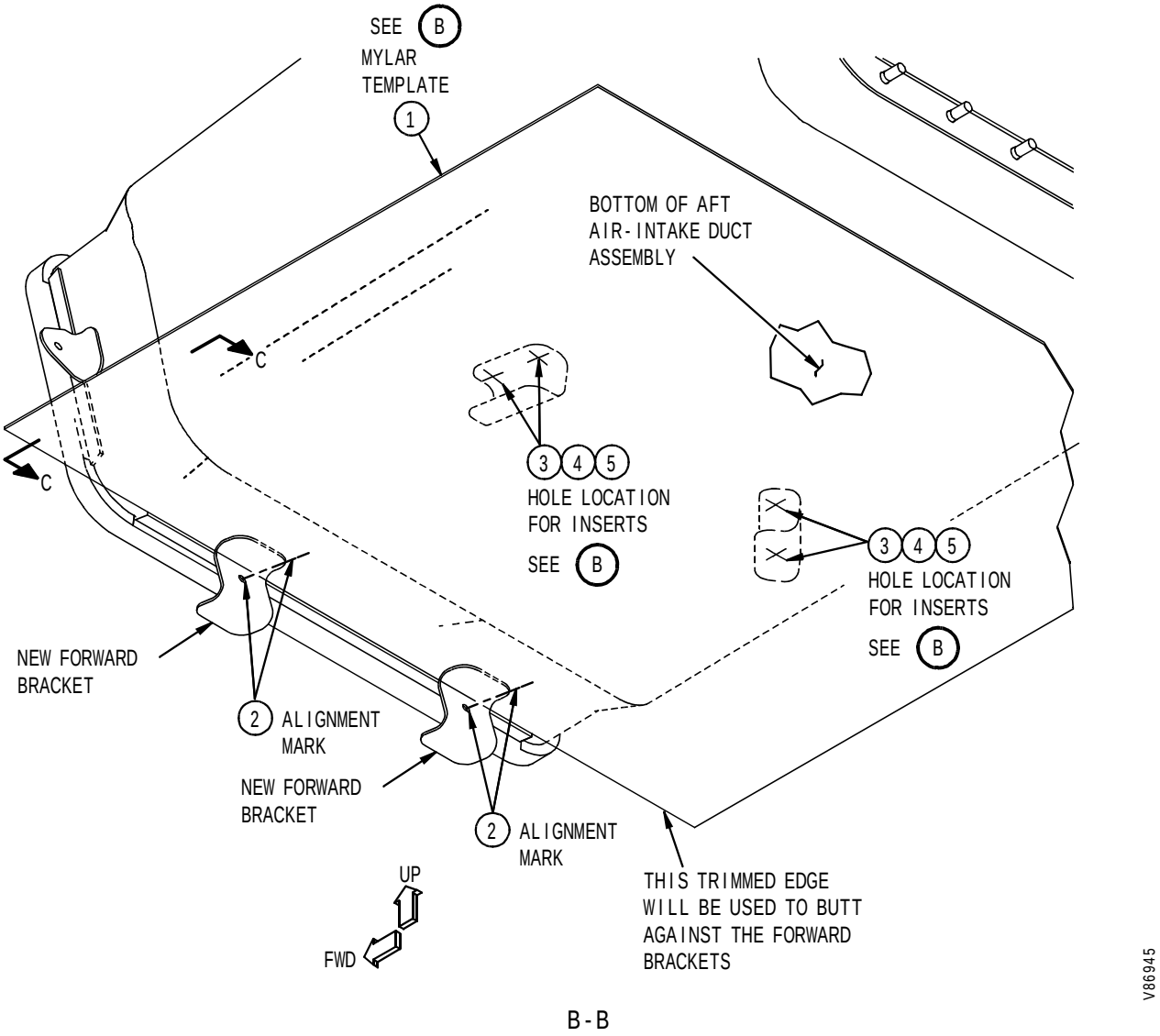

FIGURE 3: Install Aft Brackets On The Aft Air-Intake Duct Assembly
(SHEET 2 OF 5)

BOEING PROPRIETARY - Copyright © Unpublished Work - See page 1 for details.

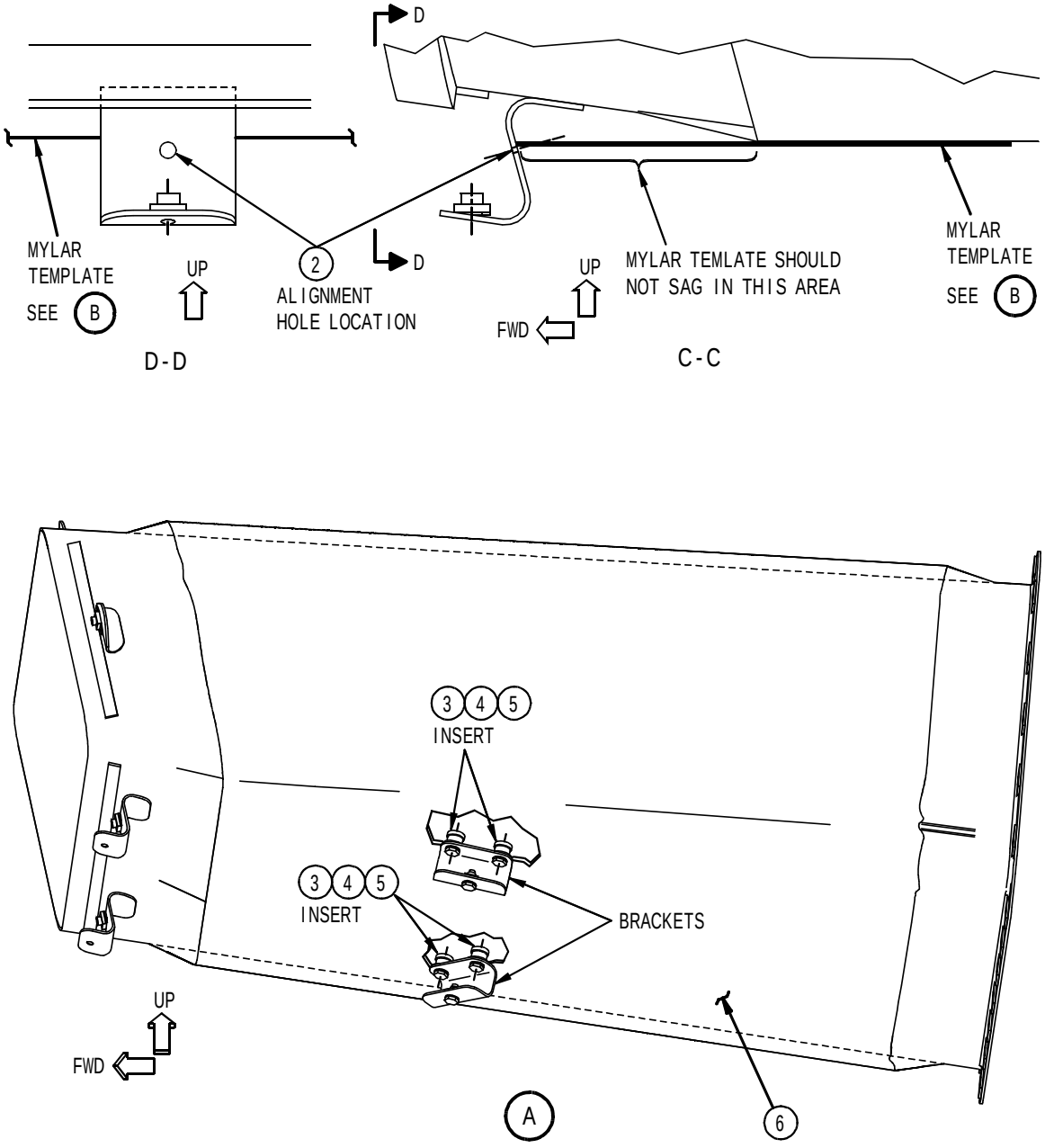

FIGURE 3: Install Aft Brackets On The Aft Air-Intake Duct Assembly
(SHEET 3 OF 5)

BOEING PROPRIETARY - Copyright © Unpublished Work - See page 1 for details.

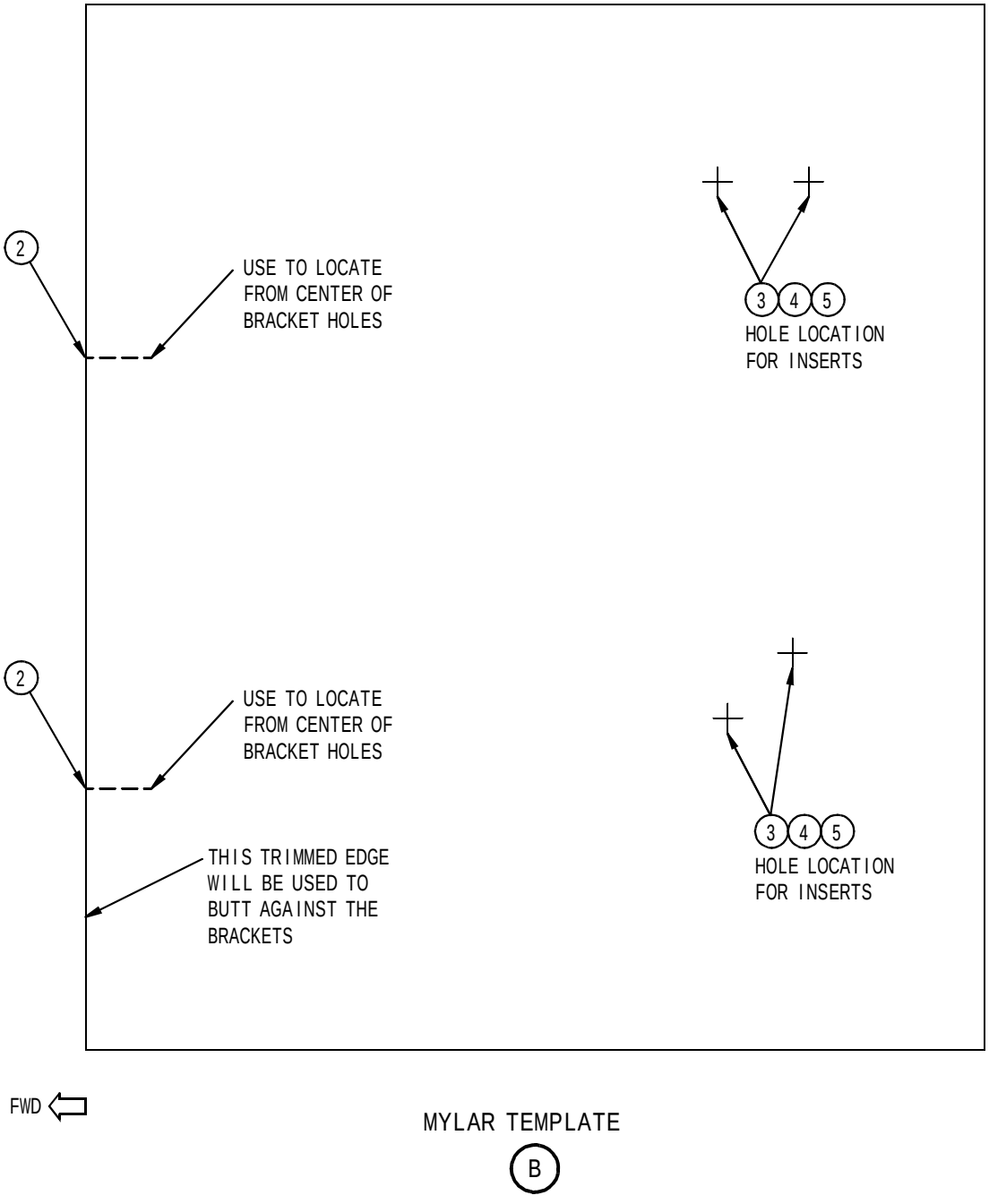

The step numbers shown below agree with the numbers shown in the circle symbols in the figure. The QTY numbers shown below are the total number of parts necessary for each step.

FIGURE 3: Install Aft Brackets On The Aft Air-Intake Duct Assembly
(SHEET 4 OF 5)

BOEING PROPRIETARY - Copyright © Unpublished Work - See page 1 for details.

NOTE: Use components from the 015T1729-7 Top Kit.

STEP	TASK	NAME	PART NUMBER	QTY	NOTES
1	Place	Mylar Template	015T1729-6	1	on the bottom of the Air-intake duct
2	Align	Marks	-	2	on the Mylar Template with holes in the two forward brackets
	NOTE: Make sure the edge of the Mylar Template butts up against the aft surface of the two forward brackets, and make sure the mylar does not sag.				
3	Transfer	Hole Locations	-	4	from template to aft Air-intake duct
	Remove	Mylar Template	015T1729-6	1	-
4	Install	Insert	BACI12AC3CD	4	Use instructions in Appendix A
5	Install	Bracket Assembly	353T0256-6	2	-
		Bolt	BACB30NM3K2	4	-
		Washer	NAS1149C0332R	4	-
6	Change Part Number	Aft Air-intake Duct Assembly	-	1	as shown in Paragraph 2.C.3 “Parts Modified and Reidentified”

FIGURE 3: Install Aft Brackets On The Aft Air-Intake Duct Assembly
(SHEET 5 OF 5)

BOEING PROPRIETARY - Copyright © Unpublished Work - See page 1 for details.

FIGURE 4: Air-Intake Duct And Dripshield Installation

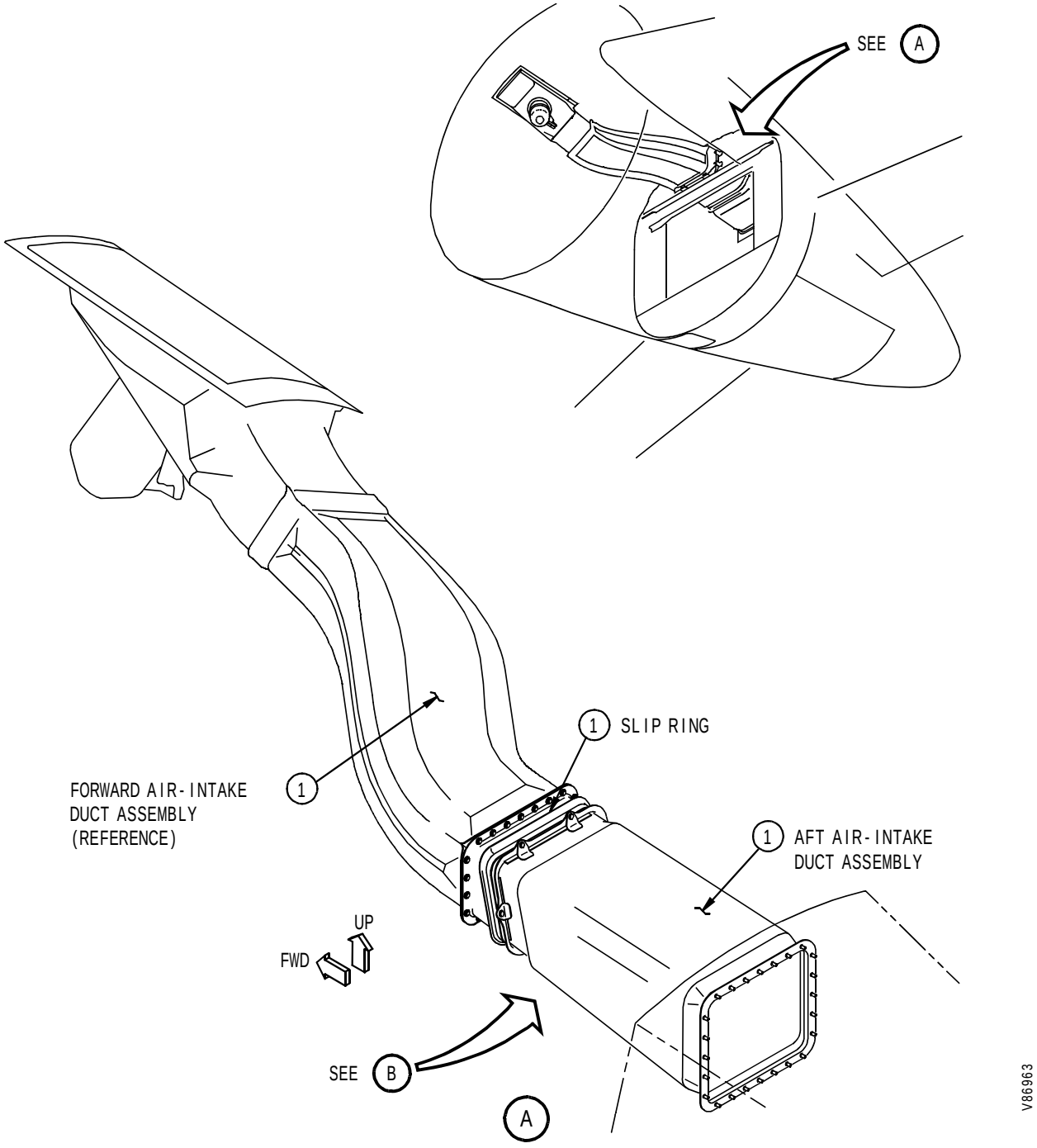

FIGURE 4: Air-Intake Duct And Dripshield Installation
(SHEET 1 OF 4)

BOEING PROPRIETARY - Copyright © Unpublished Work - See page 1 for details.

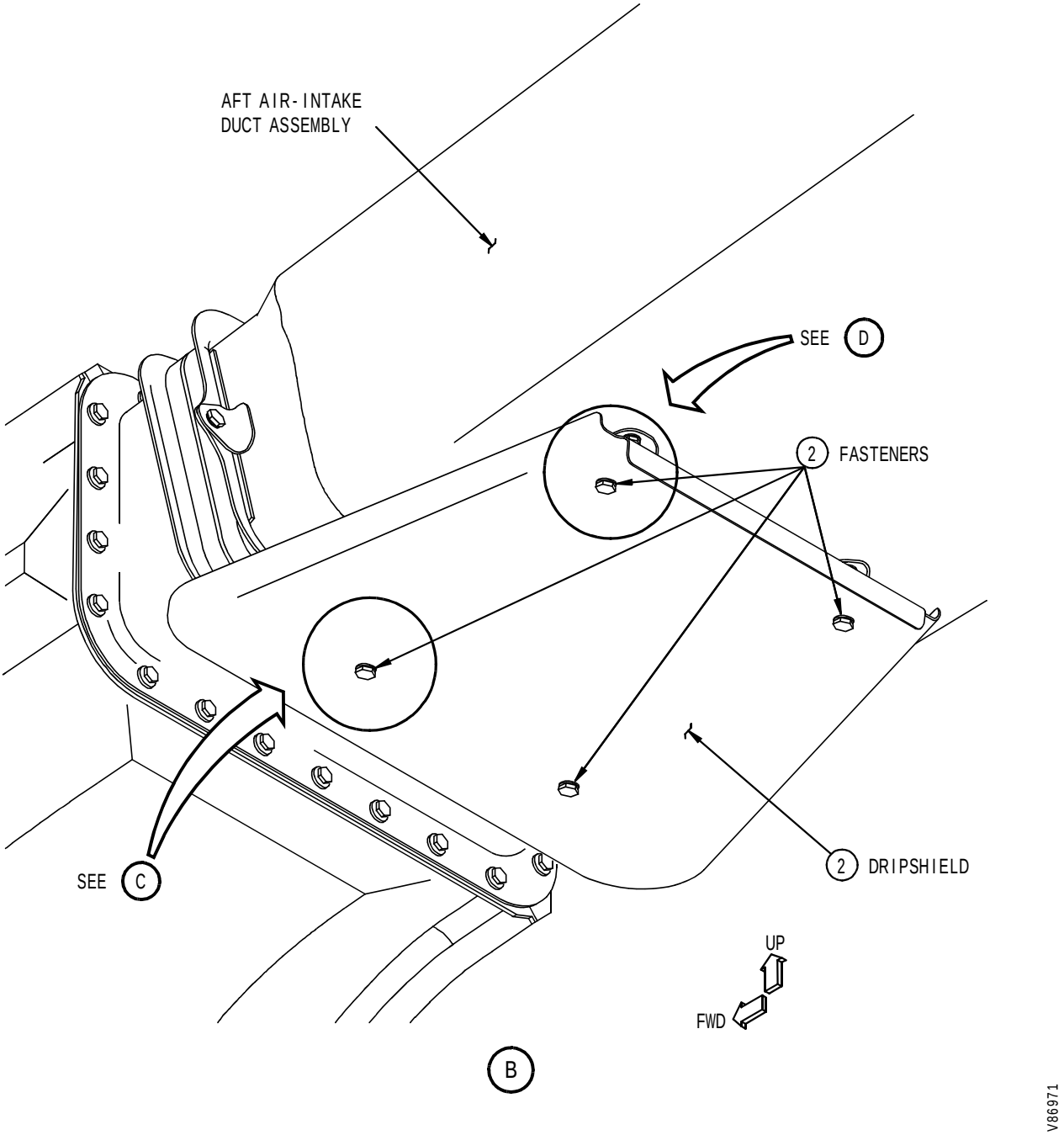

FIGURE 4: Air-Intake Duct And Dripshield Installation
(SHEET 2 OF 4)

BOEING PROPRIETARY - Copyright © Unpublished Work - See page 1 for details.

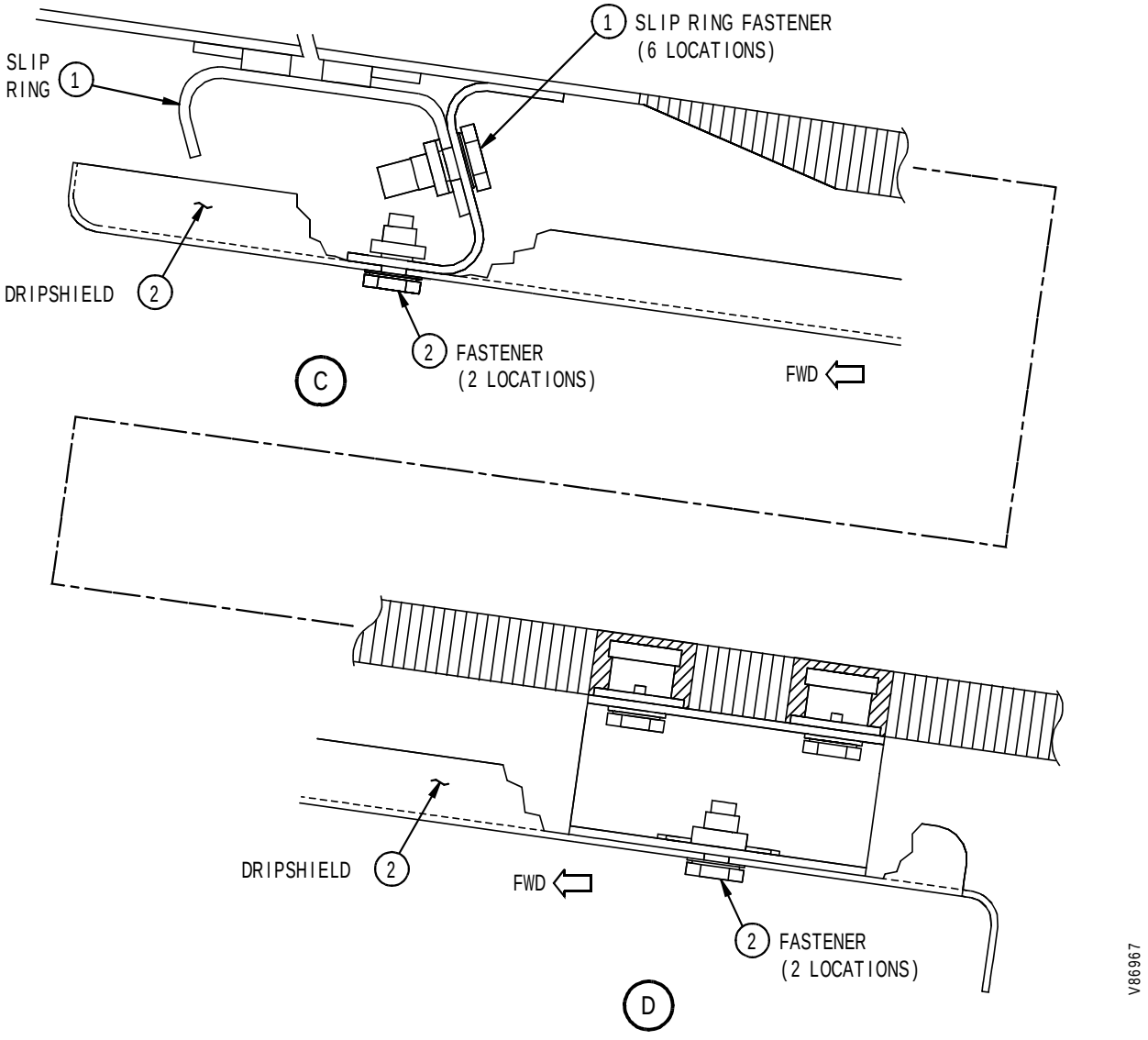

FIGURE 4: Air-Intake Duct And Dripshield Installation
(SHEET 3 OF 4)

BOEING PROPRIETARY - Copyright © Unpublished Work - See page 1 for details.

The step numbers shown below agree with the numbers shown in the circle symbols in the figure. The QTY numbers shown below are the total number of parts necessary for each step.

STEP	TASK	NAME	PART NUMBER	QTY	NOTES
1	Install	Slip Ring	-	1	kept
		Slip Ring Fastener	-	6	kept
		Forward Air-intake Duct	-	1	kept. Use 767 AMM 49-15-01
		Aft Air-intake Duct	-	1	new or reworked. Use 767 AMM 49-15-01
2	Install	Dripshield Assembly	353T0263-2	1	-
		Bolt	BACB30NM3K2	4	-
		Washer	NAS1149D0316J	4	-

FIGURE 4: Air-Intake Duct And Dripshield Installation
(SHEET 4 OF 4)

BOEING PROPRIETARY - Copyright © Unpublished Work - See page 1 for details.

APPENDIX A: WET POTTING OF INSERTS

NOTE: THE PROCESS INFORMATION THAT IS SUPPLIED WITH THIS SERVICE BULLETIN IS IN A SHORTENED FORM AND WAS UP-T0-DATE WHEN THIS SERVICE BULLETIN WAS PREPARED. THE PROCESS INFORMATION SUPPLIED WILL NOT BE KEPT UP-TO-DATE. FOR MORE INFORMATION, REFER TO THE APPLICABLE BAC PROCESS AND MATERIAL SPECIFICATIONS.

PROCESS FOR POTTING INSERTS AND EDGES INTO SANDWHICH PANELS (BAC5583)

1. BAC5583 METHOD B - WET POTTING OF INSERTS

   A. Locate and drill a 0.686 to 0.691 inch diameter hole in the panel. The hole should be down to, but not in contact with the opposite face. Hole depth shall be at least 0.250 inch greater that the insert length.

   B. Remove loose particles, including dust from the hole using a suitable method such as vacuuming or blow out with clean, dry air.

   WARNING: COMPRESSED AIR SHALL NOT BE USED FOR CLEANING PURPOSES EXCEPT WHERE REDUCED TO LESS THAN 30 PSI AND THEN ONLY WITH EFFECTIVE CHIP GUARDING AND PERSONAL PROTECTION EQUIPMENT.

   C. Do not clean the inserts unless they are contaminated with oil, grease, of similar bond inhibiting substances or particles which would prevent bonding of the insert.

   D. Profile holes with enough potting compound to ensure that when the insert is installed the bottom of the insert will be immersed into the potting.

   E. Before the initial gel time is achieved (see Table I, Cure Schedules), push the insert into the hole by applying even pressure across the insert-tab until it is flush with the surface (see Detail I).)

   F. Inject potting compound into the hole of the insert tab until approximately a.0.25 inch uninterrupted stream of potting compound is expelled through the other hole.

   G. Inject potting compound into the opposite insert tab hole until approximately a 0.25 inch uninterrupted stream of potting compound is expelled through the other hole.

   H. Examine the insert to ensure that it is flush (+0.02/-0.02 inch) with panel surface and that the surfaces are clean of potting compound.

   I. Remove the excess potting material. Solvent clean in accordance with BSOPM 20-30-03 or operator's equivalent procedure. An approved solvent may be used on fiberglass or paperbase laminate surfaces for removing trace potting material. Decorative laminate surfaces should be protected from contamination by masking tape, and solvent cleaning if needed.

   J. Cure the potting compound as in Table I, Cure Schedules.

   K. After initial cure (cure to permit further processing from Table I), remove alignment tabs, protective tape, etc. No load (such as torque or pullout for an insert) may be applied until potting is fully cured.

2. PREPARATION OF POTTING COMPOUND

BOEING PROPRIETARY - Copyright © Unpublished Work - See page 1 for details.

A. Combine 50 grams of BMS 5-28, Type 18 (BMS 5-28, Type 19, 20 or 30 Optional) Part A with the appropriate amount of Part B in accordance with the manufacturer's recommendations. Thoroughly blend the two components within 6 minutes of mixing. The working life of the mixed potting compound at Room Temperature (65 to 85 F) is 12 to 25 minutes.

TABLE I: CURE SCHEDULES			
BMS 5-28 TYPE	**GEL TIME (minutes)**	**CURE TO PREMIT FURTHER PROCESSING**	**FULL CURE**
18	12-25	3 hours minimum at room temperature (b)	5 hours at 125 F (a) 7 days at room temperature (b)
(a) +/- 10 F (b) 65 to 85 F			

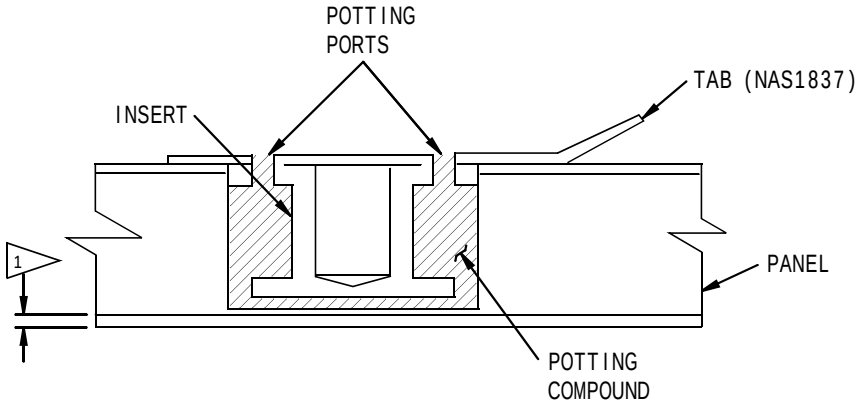

DETAIL I

APPENDIX A: WET POTTING OF INSERTS

BOEING PROPRIETARY - Copyright © Unpublished Work - See page 1 for details.