Commercial
Airplanes

737
Service Bulletin

ALERT

Number: **737-57A1335**
Original Issue: May 24, 2017
ATA System: 5730

SUBJECT: WINGS - Plates/Skin - Upper Aft Skin at and Forward of the Rear Spar from Wing Buttock Line 159 to 220 - Inspection

Export of this technology is controlled under the United States Export Administration Regulations (EAR) (15 CFR 300-774). An export license may be required before it is used for development, production or use by foreign persons from specific countries. The controller of this data has the individual responsibility to abide by all export laws.

ECCN: 9E991

BOEING PROPRIETARY, CONFIDENTIAL AND/OR TRADE SECRET

Copyright © 2017 Boeing.
Unpublished Work. All Rights Reserved.

Treatment of this document and its content is governed by contract with Boeing. Rights to use this document are licensed on a per aircraft basis and such rights may not be transferable. For more information, contact The Boeing Company.

Boeing, the Boeing signature, the Boeing symbol, 707, 717, 727, 737, 747, 757, 767, 777, 787, Dreamliner, BBJ, DC-8, DC-9, DC-10, KC-10, KC-46, KDC-10, MD-10, MD-11, MD-80, MD-88, MD-90, P-8, Poseidon and Boeing liveries are all trademarks owned by The Boeing Company; and no trademark license is granted in connection with this document unless provided in writing by Boeing.

BLANK PAGE

Export Controlled ECCN: 9E991 - BOEING PROPRIETARY - Copyright © Unpublished Work - See page 1 for details.

Table of Contents

Summary . . . 5
1. PLANNING INFORMATION . . . 9
A. Effectivity . . . 9
1. Airplanes . . . 9
2. Spares Affected . . . 21
B. Concurrent Requirements . . . 21
C. Reason . . . 21
D. Description . . . 21
E. Compliance . . . 22
F. Approval . . . 24
G. Manpower . . . 24
H. Weight and Balance Changes . . . 24
I. Electrical Load Data . . . 24
J. References . . . 24
1. Existing Data: . . . 24
2. Data Supplied with this Service Bulletin: . . . 25
3. Installation Drawings Used in the Preparation of this Service Bulletin: . . . 25
K. Publications Affected . . . 25
L. Interchangeability and Intermixability of Parts . . . 26
M. Software Accomplishment Summary . . . 26
2. MATERIAL INFORMATION . . . 27
A. Material - Price and Availability . . . 27
B. Industry Support Information . . . 27
C. Parts Necessary for Each Airplane . . . 27
1. Kits/Parts . . . 27
2. Parts and Materials Supplied by the Operator . . . 27
3. Parts Modified and Reidentified . . . 27
4. Parts Removed and Not Replaced . . . 27
D. Parts Necessary to Change Spares . . . 27
E. Special Tooling - Price and Availability . . . 27
F. Special Tooling Necessary to do this Service Bulletin . . . 27
3. ACCOMPLISHMENT INSTRUCTIONS . . . 29
A. GENERAL INFORMATION . . . 29
B. WORK INSTRUCTIONS . . . 30
FIGURE 1: LEFT WING - DETAILED INSPECTION OF THE UPPER AFT SKIN FROM WBL 159 TO WBL 220 . . . 32
FIGURE 2: RIGHT WING - DETAILED INSPECTION OF THE UPPER AFT SKIN FROM WBL 159 TO WBL 220 . . . 34
APPENDIX A: LOGIC DIAGRAM FOR PARAGRAPH 1.E. COMPLIANCE: TABLE 1: DETAILED INSPECTION OF THE UPPER AFT SKIN ON THE LEFT OR RIGHT WING FROM WING BUTTOCK LINE (WBL) 159 TO WBL 220 . . . 36

Export Controlled ECCN: 9E991 - BOEING PROPRIETARY - Copyright © Unpublished Work - See page 1 for details.

BLANK PAGE

Export Controlled ECCN: 9E991 - BOEING PROPRIETARY - Copyright © Unpublished Work - See page 1 for details.

ALERT

Number: **737-57A1335**
Original Issue: May 24, 2017
ATA System: 5730

Summary

SUBJECT: WINGS - Plates/Skin - Upper Aft Skin at and Forward of the Rear Spar from Wing Buttock Line 159 to 220 - Inspection

THIS DOCUMENT IS SENT TO THE OPERATORS OF RECORD OF THE AIRPLANES SHOWN IN PARAGRAPH 1.A., EFFECTIVITY. IF AN AIRPLANE HAS BEEN LEASED OR SOLD, SEND THIS DOCUMENT TO THE NEW OPERATOR. IF APPLICABLE SPARES HAVE BEEN SOLD, SEND THIS DOCUMENT TO THE NEW OWNER.

CONCURRENT REQUIREMENTS

None.

BACKGROUND

Accomplishment of this service bulletin will make sure that cracks are found in the upper aft skin (inspar upper skin) of the left and right wing at and forward of the rear spar from Wing Buttock Line (WBL) 159 to WBL 220. If this service bulletin is not done, undetected cracks in the upper aft skin can lead to the inability of a principal structural element to sustain flight load which could adversely affect the structural integrity of the airplane.

While performing inspections in accordance with SB 737-57-1318, one operator reported two crack indications in the right wing upper aft skin originating from fastener holes common to the rear spar upper chord at WBL 172.30 and WBL 197.38. The cracks were found on airplanes with 58,148 flight hours and 45,512 flight cycles to 64,204 flight hours and 51,409 flight cycles. Stresses are locally influenced by the bend in the rear spar causing higher cyclic fatigue stresses.

This service bulletin provides instructions to inspect the upper aft skin and forward of the rear spar for any crack from WBL 159 to WBL 220 and make sure any crack is found and repaired before it reaches a critical length.

Boeing Fleet Team Digest (FTD) 737 FTD 57-16003 is related to this service bulletin.

Boeing Service Related Problem (SRP) 737-SRP-57-0305 is related to this service bulletin.

This table is provided to operators for planning purposes only. Refer to the applicable sections for more information.

Planning Data	Affected	Reference
Spares Affected	No	Paragraph 1.A.2., Spares Affected
AD Related	Yes	Paragraph 1.E., Compliance and Paragraph 1.F., Approval

Export Controlled ECCN: 9E991 - BOEING PROPRIETARY - Copyright © Unpublished Work - See page 1 for details.

Planning Data	Affected	Reference
Weight and Balance Change	No	Paragraph 1.H., Weight and Balance Changes
Electrical Load Changed	No	Paragraph 1.I., Electrical Load Data
Publications Affected	No	Paragraph 1.K., Publications Affected
Airplane Flight Operations Affected (Flight Crew Operations Manual and/or FAA Approved Airplane Flight Manual)	No	Paragraph 1.K., Publications Affected
Kits/Parts Required	No	Paragraph 2.C.1., Kits/Parts
Operator Supplied Parts/Material	No	Paragraph 2.C.2., Parts and Materials Supplied by the Operator
Special Tooling Required	No	Paragraph 2.F., Special Tooling Necessary to do this Service Bulletin

ACTION

Group 1:
Boeing endorses the FAA rules related to Limit of Validity (LOV) and recommends immediate and permanent removal from service of any airplanes upon reaching the LOV, whether or not it is operated under FAA jurisdiction. As such, Boeing no longer provides maintenance instructions for airplanes that have accumulated flight cycles beyond the LOV. 737 Classic airplanes line numbers 1-291 have accumulated flight cycles beyond the LOV of the maintenance program. 14 CFR 121.1115 and 129.115 prohibit operation of an airplane beyond its LOV.

Group 2:
Deactivate the trailing edge flap system. Do a detailed inspection for any crack in the upper aft skin from WBL 159 to WBL 220. If any crack is found, contact The Boeing Company for repair instructions and do the repair. Repeat the detailed inspection in the unrepaired areas. If no crack is found, repeat the detailed inspection. Activate the trailing edge flap system.

EFFECTIVITY

All 737-100, 737-200, 737-200C, 737-300, 737-400, and 737-500 Airplanes. Refer to Paragraph 1.A.1., Airplanes, for the list of affected airplanes.

COMPLIANCE

The Federal Aviation Administration (FAA) will possibly release an Airworthiness Directive related to this service bulletin. The Airworthiness Directive will make the compliance tasks and times given in this service bulletin mandatory.

Refer to Paragraph 1.E., Compliance.

INDUSTRY SUPPORT INFORMATION

Boeing warranty remedies are not available for the inspection given in this service bulletin.

MANPOWER

Refer to Paragraph 1.G., Manpower.

Export Controlled ECCN: 9E991 - BOEING PROPRIETARY - Copyright © Unpublished Work - See page 1 for details.

ALERT **ALERT**

MATERIAL INFORMATION

None.

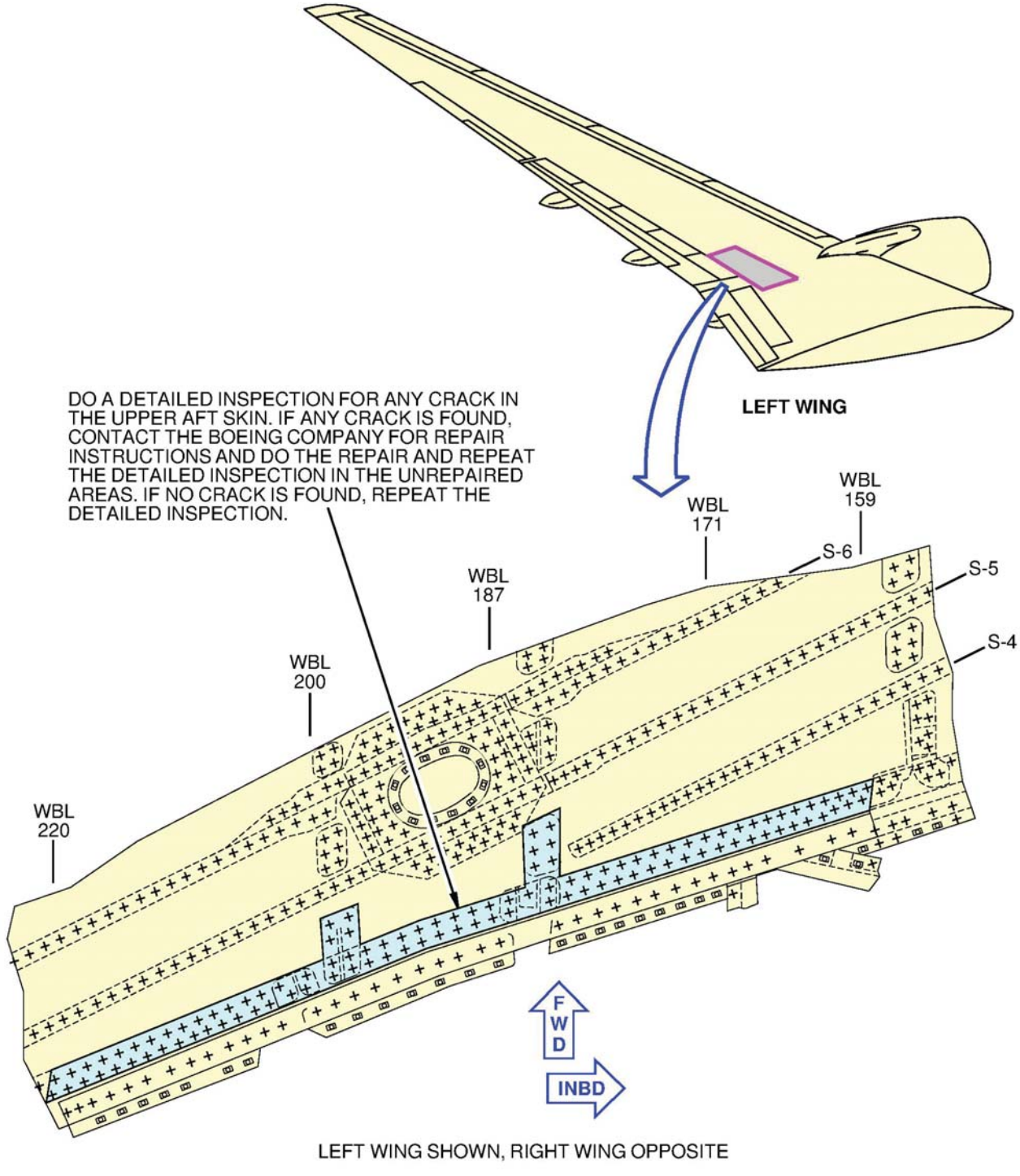

Export Controlled ECCN: 9E991 - BOEING PROPRIETARY - Copyright © Unpublished Work - See page 1 for details.

BLANK PAGE

Export Controlled ECCN: 9E991 - BOEING PROPRIETARY - Copyright © Unpublished Work - See page 1 for details.

ALERT

Number: **737-57A1335**
Original Issue: May 24, 2017
ATA System: 5730

SUBJECT: WINGS - Plates/Skin - Upper Aft Skin at and Forward of the Rear Spar from Wing Buttock Line 159 to 220 - Inspection

THIS DOCUMENT IS SENT TO THE OPERATORS OF RECORD OF THE AIRPLANES SHOWN IN PARAGRAPH 1.A., EFFECTIVITY. IF AN AIRPLANE HAS BEEN LEASED OR SOLD, SEND THIS DOCUMENT TO THE NEW OPERATOR. IF APPLICABLE SPARES HAVE BEEN SOLD, SEND THIS DOCUMENT TO THE NEW OWNER.

1. PLANNING INFORMATION

A. Effectivity

1. Airplanes

This service bulletin is applicable to all 737-100, 737-200, 737-200C, 737-300, 737-400, and 737-500 Airplanes in 2 Groups. The Variable Numbers and Group Information for the applicable airplanes is given below.

Refer to Service Bulletin Index D6-19567 Part 3 for Airplane Variable Number, Line Number, and Serial Number data.

GROUP	CONFIGURATION	DESCRIPTION
1	-	Airplane line numbers 1-291
2	-	Airplane line numbers 292-3132

Airplane Models:

737-100, 737-200, 737-200C, 737-300, 737-400, 737-500

Variable Number	Group
PA001 - PA022	1
PA099	1
PA231 - PA232	1
PC001 - PC005	1

Export Controlled ECCN: 9E991 - BOEING PROPRIETARY - Copyright © Unpublished Work - See page 1 for details.

Variable Number	Group
PG001 - PG075	1
PG199	1
PG201 - PG230	1
PG251 - PG255	1
PG271 - PG279	1
PG301 - PG314	1
PG331 - PG332	1
PG351 - PG356	1
PG375	1
PG401 - PG403	1
PG431 - PG442	1
PG471 - PG475	1
PG501 - PG505	1
PG571 - PG583	1
PG584 - PG586	2
PG621 - PG630	1
PG651 - PG652	1
PG701 - PG705	1
PH001	2
PH011 - PH013	2
PH021 - PH024	2
PH701 - PH715	1
PH731 - PH732	1
PH741 - PH742	1
PH743	2
PJ001 - PJ002	1
PJ003 - PJ009	2
PJ031 - PJ032	1
PJ071 - PJ072	1
PJ101 - PJ104	1
PJ105 - PJ119	2
PJ201 - PJ219	2
PJ301 - PJ302	2

Export Controlled ECCN: 9E991 - BOEING PROPRIETARY - Copyright © Unpublished Work - See page 1 for details.

Variable Number	Group
PJ551 - PJ561	2
PJ601 - PJ615	2
PJ811	2
PJ816 - PJ817	2
PK026 - PK029	2
PK041 - PK053	2
PK061 - PK070	2
PK081 - PK082	2
PK091 - PK099	2
PK101 - PK103	2
PK111 - PK120	2
PK141 - PK146	2
PK201 - PK204	2
PK211 - PK223	2
PK231 - PK241	2
PK251 - PK258	2
PK271 - PK274	2
PK281 - PK289	2
PK291	2
PK301 - PK318	2
PK341	2
PK351 - PK361	2
PK391	2
PK431 - PK433	2
PK451 - PK452	2
PK461 - PK469	2
PK495	2
PK501 - PK504	2
PK511 - PK515	2
PK519	2
PK521 - PK528	2
PK541 - PK565	2
PK581	2

Export Controlled ECCN: 9E991 - BOEING PROPRIETARY - Copyright © Unpublished Work - See page 1 for details.

Variable Number	Group
PK591 - PK599	2
PK601 - PK617	2
PK621 - PK637	2
PK641 - PK642	2
PK661 - PK666	2
PK671 - PK681	2
PK691 - PK697	2
PK711 - PK716	2
PK731 - PK765	2
PK771 - PK779	2
PK801 - PK804	2
PK819 - PK827	2
PK830	2
PK861 - PK863	2
PK871 - PK874	2
PK881 - PK884	2
PK901 - PK938	2
PK971 - PK974	2
PL001 - PL028	2
PL061	2
PL081	2
PL101 - PL113	2
PL151	2
PL171 - PL172	2
PL201 - PL203	2
PL221	2
PL401 - PL417	2
PL421	2
PL441	2
PL451 - PL456	2
PL471	2
PL491	2
PL501 - PL506	2

Export Controlled ECCN: 9E991 - BOEING PROPRIETARY - Copyright © Unpublished Work - See page 1 for details.

Variable Number	Group
PL551 - PL562	2
PL581	2
PL601 - PL603	2
PL611	2
PL621 - PL626	2
PL631 - PL632	2
PL711 - PL712	1
PL716	1
PL717 - PL747	2
PL756	2
PL758	2
PL761 - PL770	2
PL781 - PL788	2
PL793	2
PL801 - PL803	1
PM001 - PM006	2
PM016 - PM017	2
PM021 - PM023	2
PM051 - PM066	2
PM101 - PM119	2
PM141 - PM142	2
PM171	2
PM181	2
PM251 - PM255	2
PM281 - PM283	2
PM381 - PM399	2
PM401 - PM417	2
PM541 - PM564	2
PN001 - PN002	2
PN021 - PN043	2
PN081 - PN086	2
PN101 - PN117	2
PN131 - PN163	2

Export Controlled ECCN: 9E991 - BOEING PROPRIETARY - Copyright © Unpublished Work - See page 1 for details.

Variable Number	Group
PN401 - PN420	2
PN431 - PN433	2
PN451 - PN456	2
PN471 - PN474	2
PN481	2
PN491 - PN493	2
PN501 - PN502	2
PN511 - PN512	2
PN521	2
PP001 - PP054	2
PP101 - PP169	2
PP181 - PP199	2
PP201 - PP205	2
PP221	2
PP231 - PP243	2
PP281 - PP286	2
PP301 - PP305	2
PP351 - PP353	2
PP376 - PP384	2
PP391 - PP393	2
PP401 - PP440	2
PP471 - PP475	2
PP501 - PP522	2
PP631 - PP634	2
PP651 - PP652	2
PP671 - PP699	2
PP701 - PP733	2
PP771 - PP779	2
PP801 - PP808	2
PP821 - PP827	2
PP831 - PP848	2
PP851 - PP852	2
PP861 - PP877	2

Export Controlled ECCN: 9E991 - BOEING PROPRIETARY - Copyright © Unpublished Work - See page 1 for details.

Variable Number	Group
PP891 - PP899	2
PP901 - PP936	2
PP946 - PP948	2
PP951 - PP952	2
PP961 - PP967	2
PP981 - PP991	2
PP993	2
PQ001 - PQ016	2
PQ026 - PQ041	2
PQ051 - PQ092	2
PQ101 - PQ199	2
PQ201 - PQ202	2
PQ221 - PQ237	2
PQ241 - PQ243	2
PQ251 - PQ267	2
PQ281 - PQ299	2
PQ301 - PQ307	2
PQ331 - PQ332	2
PQ341 - PQ348	2
PQ361 - PQ373	2
PQ391 - PQ395	2
PQ401 - PQ418	2
PQ421	2
PQ431 - PQ438	2
PQ447 - PQ448	2
PQ451	2
PQ454	2
PQ471 - PQ475	2
PQ479 - PQ481	2
PQ486 - PQ487	2
PQ491 - PQ493	2
PQ771 - PQ772	2
PQ791 - PQ793	2

Export Controlled ECCN: 9E991 - BOEING PROPRIETARY - Copyright © Unpublished Work - See page 1 for details.

Variable Number	Group
PQ801 - PQ805	2
PQ931 - PQ935	2
PQ951	2
PQ971 - PQ997	2
PR001 - PR017	2
PR021 - PR034	2
PR041 - PR045	2
PR061 - PR072	2
PR077 - PR082	2
PR091 - PR092	2
PR096	2
PR101	2
PR121 - PR122	2
PR131 - PR132	2
PR141 - PR143	2
PR161 - PR172	2
PR181	2
PS601 - PS631	2
PS636 - PS638	2
PS641 - PS644	2
PS651 - PS657	2
PS666 - PS669	2
PS691 - PS692	2
PS701 - PS706	2
PS751 - PS799	2
PS811	2
PS836 - PS837	2
PS841 - PS846	2
PS851 - PS852	2
PS856	2
PS861 - PS863	2
PS866 - PS868	2
PS871 - PS874	2

Export Controlled ECCN: 9E991 - BOEING PROPRIETARY - Copyright © Unpublished Work - See page 1 for details.

Variable Number	Group
PS896 - PS897	2
PS901 - PS941	2
PS956 - PS957	2
PS961 - PS963	2
PS971 - PS978	2
PT001 - PT015	2
PT021 - PT031	2
PT041 - PT064	2
PT101 - PT105	2
PT121 - PT138	2
PT146 - PT148	2
PT161 - PT170	2
PT181 - PT188	2
PT211 - PT220	2
PT295	2
PT301 - PT309	2
PT331 - PT360	2
PT381 - PT399	2
PT401 - PT438	2
PT501 - PT517	2
PT561 - PT565	2
PT581 - PT586	2
PT611 - PT621	2
PT641 - PT644	2
PT651 - PT656	2
PT671 - PT672	2
PT681 - PT685	2
PT701 - PT703	2
PT716 - PT717	2
PT721 - PT725	2
PT801 - PT834	2
PT851 - PT854	2
PT871 - PT886	2

Export Controlled ECCN: 9E991 - BOEING PROPRIETARY - Copyright © Unpublished Work - See page 1 for details.

Variable Number	Group
PT901 - PT930	2
PT971 - PT973	2
PT981 - PT985	2
PT996	2
PU001 - PU025	2
PU301	2
PU311 - PU313	2
PV001 - PV055	2
PV201 - PV209	2
PV226 - PV229	2
PV231 - PV237	2
PV271 - PV272	2
PV281 - PV287	2
PV296	2
PV301 - PV302	2
PV351	2
PV356 - PV357	2
PW001 - PW054	2
PW061 - PW068	2
PW072	2
PW086 - PW088	2
PW091 - PW094	2
PW101 - PW102	2
PW106	2
PW111 - PW120	2
PW156 - PW157	2
PW161 - PW171	2
PW201 - PW252	2
PW261 - PW268	2
PW271 - PW276	2
PW278	2
PW281 - PW293	2
PW296	2

Export Controlled ECCN: 9E991 - BOEING PROPRIETARY - Copyright © Unpublished Work - See page 1 for details.

Variable Number	Group
PW301 - PW327	2
PW401 - PW408	2
PW411 - PW418	2
PW421 - PW424	2
PW431 - PW435	2
PW441 - PW450	2
PW461 - PW467	2
PW501 - PW504	2
PW511 - PW522	2
PW524 - PW550	2
PW556 - PW557	2
PW561 - PW564	2
PW571 - PW576	2
PW591 - PW596	2
PW611 - PW622	2
PW631 - PW637	2
PW661 - PW662	2
PW681 - PW683	2
PW701 - PW702	2
PW711 - PW717	2
PW741 - PW742	2
PW761	2
PW771	2
PW831	2
PW851 - PW856	2
PX071	1
PX701	1
PY001 - PY008	1
PY021	1
PY022	2
PY031	1
PY036 - PY037	2
PY046 - PY048	2

Export Controlled ECCN: 9E991 - BOEING PROPRIETARY - Copyright © Unpublished Work - See page 1 for details.

Variable Number	Group
PY051 - PY053	2
PY056 - PY057	2
PY101 - PY103	2
PY111 - PY113	2
PY131 - PY135	2
PY141 - PY143	2
PY151 - PY154	2
PY156 - PY157	2
PY161 - PY162	2
PY166	2
PY191	2
PY201	2
PY221 - PY222	2
PY231	2
PY241 - PY244	2
PY270 - PY275	2
PY281	2
PY286	2
PY301 - PY304	1
PY321 - PY323	1
PY341 - PY346	1
PY361 - PY362	1
PY381	1
PY401	2
PY409 - PY411	2
PY421 - PY422	2
PY441	2
PY451	2
PY461 - PY463	2
PY591 - PY595	2
PY611 - PY612	2
PY621	2
PY631	2

Export Controlled ECCN: 9E991 - BOEING PROPRIETARY - Copyright © Unpublished Work - See page 1 for details.

Variable Number	Group
PY651	2
PY671 - PY672	2
PY721	2
PY741	2

2. Spares Affected

None.

B. Concurrent Requirements

None.

C. Reason

Accomplishment of this service bulletin will make sure that cracks are found in the upper aft skin (inspar upper skin) of the left and right wing at and forward of the rear spar from Wing Buttock Line (WBL) 159 to WBL 220. If this service bulletin is not done, undetected cracks in the upper aft skin can lead to the inability of a principal structural element to sustain flight load which could adversely affect the structural integrity of the airplane.

While performing inspections in accordance with SB 737-57-1318, one operator reported two crack indications in the right wing upper aft skin originating from fastener holes common to the rear spar upper chord at WBL 172.30 and WBL 197.38. The cracks were found on airplanes with 58,148 flight hours and 45,512 flight cycles to 64,204 flight hours and 51,409 flight cycles. Stresses are locally influenced by the bend in the rear spar causing higher cyclic fatigue stresses.

This service bulletin provides instructions to inspect the upper aft skin and forward of the rear spar for any crack from WBL 159 to WBL 220 and make sure any crack is found and repaired before it reaches a critical length.

Boeing Fleet Team Digest (FTD) 737 FTD 57-16003 is related to this service bulletin.

Boeing Service Related Problem (SRP) 737-SRP-57-0305 is related to this service bulletin.

D. Description

Group 1:
Boeing endorses the FAA rules related to Limit of Validity (LOV) and recommends immediate and permanent removal from service of any airplanes upon reaching the LOV, whether or not it is operated under FAA jurisdiction. As such, Boeing no longer provides maintenance instructions for airplanes that have accumulated flight cycles beyond the LOV. 737 Classic airplanes line numbers 1-291 have accumulated flight cycles beyond the LOV of the maintenance program. 14 CFR 121.1115 and 129.115 prohibit operation of an airplane beyond its LOV.

Export Controlled ECCN: 9E991 - BOEING PROPRIETARY - Copyright © Unpublished Work - See page 1 for details.

Group 2:
Deactivate the trailing edge flap system. Do a detailed inspection for any crack in the upper aft skin from WBL 159 to WBL 220. If any crack is found, contact The Boeing Company for repair instructions and do the repair; and repeat the detailed inspection in the unrepaired areas. If no crack is found, repeat the detailed inspection. Activate the trailing edge flap system.

The work in this service bulletin is done in the maintenance zone(s) given below.

Group 1:

Affected Maintenance Zones	
Model	**Zone**
737-100, 737-200, 737-200C	3-5, 4-5

Group 2:

Affected Maintenance Zones	
Model	**Zone**
737-200, 737-200C	3-5, 4-5

Group 2:

Affected Maintenance Zones	
Model	**Zone**
737-300, 737-400, 737-500	305, 405

E. Compliance

The Federal Aviation Administration (FAA) will possibly release an Airworthiness Directive related to this service bulletin. The Airworthiness Directive will make the compliance tasks and times given in this service bulletin mandatory.

When more than one OPTION is given for a CONDITION, do only one of the OPTION numbers. When more than one ACTION is given for a CONDITION number or an OPTION number, do all of the ACTION numbers for that CONDITION number or OPTION number.

Accomplish the required actions, based on the applicable conditions in Table 1, in accordance with Paragraph 3. Accomplishment Instructions.

A logic diagram showing compliance tasks and compliance times is included as an aid in Appendix A.

Group 1:
Boeing endorses the FAA rules related to Limit of Validity (LOV) and recommends immediate and permanent removal from service of any airplanes upon reaching the LOV, whether or not it is operated under FAA jurisdiction. As such, Boeing no longer provides maintenance instructions for airplanes that have accumulated flight cycles beyond the LOV. 737 Classic airplanes line numbers 1-291 have accumulated flight cycles beyond the LOV of the maintenance program. 14 CFR 121.1115 and 129.115 prohibit operation of an airplane beyond its LOV.

Export Controlled ECCN: 9E991 - BOEING PROPRIETARY - Copyright © Unpublished Work - See page 1 for details.

ALERT ALERT

Group 2:

Table 1: Detailed Inspection of the upper aft skin on the left and right wing from Wing Buttock Line (WBL) 159 to WBL 220

Condition	Action	Compliance Time (Whichever Occurs Later)		Repeat Interval (Not to Exceed)
Airplanes that have not done an Open Hole High Frequency Eddy Current (HFEC) inspection of all the fastener holes in the inspection area. (a)	Do PART 1: DETAILED INSPECTION OF THE UPPER WING AFT SKIN FROM WBL 159 TO 220 for any crack.	Before 45,000 total flight cycles.	Within 4,500 flight cycles after the original issue date of this Service Bulletin.	-
Airplanes that have done an Open Hole HFEC inspection of all the fastener holes in the inspection area. (a)	Do PART 1: DETAILED INSPECTION OF THE UPPER WING AFT SKIN FROM WBL 159 TO 220 for any crack.	Before 45,000 total flight cycles or within 9,000 flight cycles after the most recent open hole HFEC inspection, whichever occurs later.	Within 4,500 flight cycles after the original issue date of this Service Bulletin.	-
CONDITION 1: ANY CRACK FOUND	CONDITION 1 (ACTION 1): Contact The Boeing Company for repair instructions and do the repair.	Before further flight.		-
	CONDITION 1 (ACTION 2): Repeat PART 1: DETAILED INSPECTION OF THE UPPER AFT SKIN FROM WBL 159 TO WBL 220 for any crack in the unrepaired areas.	-		4,500 flight cycles.
CONDITION 2: NO CRACK FOUND	Repeat PART 1: DETAILED INSPECTION OF THE UPPER AFT SKIN FROM WBL 159 TO WBL 220 for any crack.	-		4,500 flight cycles.

(a) Accomplishment of the open hole HFEC inspection of all the fastener holes in the inspection area is met if the inspection was done in accordance with 737 NDT Manual Part 6, 51-00-00 Procedure 1, Procedure 11 or Procedure 16 during the accomplishment of one the following:

– 737-300 SRM 57-20-10 Repair 4, 737-400 SRM 57-20-10 Repair 4, or 737-500 SRM 57-20-10 Repair 4 for 737-300/400/500 Airplanes.
– Boeing ODA FAA Form 8100-9 approved upper rear spar chord replacement repair.

The inspection area is defined in FIGURE 1 and FIGURE 2.

Export Controlled ECCN: 9E991 - BOEING PROPRIETARY - Copyright © Unpublished Work - See page 1 for details.

F. Approval

This service bulletin was examined by the Federal Aviation Administration (FAA). The changes specified in this service bulletin comply with the applicable regulations and are FAA approved, as well as European Aviation Safety Agency (EASA)/Joint Aviation Authorities (JAA) approved for all EASA/JAA approved airplanes listed in the service bulletin effectivity. This service bulletin and its approval were based on the airplane in its original Boeing delivery configuration or as modified by other approved Boeing changes.

If an airplane has a non-Boeing modification or repair that affects a component or system also affected by this service bulletin, the operator is responsible for obtaining appropriate regulatory agency approval before incorporating this service bulletin.

G. Manpower

The table below shows an estimate of the task hours necessary to do this inspection for each airplane. This estimate is for direct labor only, done by an experienced crew. Adjust the estimate with operator task hour data if necessary. The estimate does not include lost time. These are some examples of lost time:

- Time to adjust to the workplace
- Time to schedule the work
- Time to inspect the work
- Time to cure the materials
- Time to make the parts
- Time to find the tools

Task	Number of Persons	Task Hours	Elapsed Hours
Preparation	1	0.75	0.75
Figure 1	1	1.00	1.00
Figure 2	1	1.00	1.00
Restoration	1	0.75	0.75
TOTAL FOR EACH AIRPLANE		3.50	3.50

H. Weight and Balance Changes

None.

I. Electrical Load Data

Not changed.

J. References

1. Existing Data:

   a. Boeing Service Bulletin 737-57A1328, 737-57A1326, 737-57A1329

   b. Boeing Service Related Problem (SRP) 737-SRP-57-0305

Export Controlled ECCN: 9E991 - BOEING PROPRIETARY - Copyright © Unpublished Work - See page 1 for details.

c. Service Bulletin Index D6-19567

d. 737 Fleet Team Digest (FTD) 57-16003

e. 737 Non-Destructive Testing (NDT) Manual Part 6, 51-00-00

f. 737-100/200 Aircraft Maintenance Manual (AMM) 27-51-00

g. 737-300/400/500 Aircraft Maintenance Manual (AMM) 27-51-00

h. 737-300 Structural Repair Manual (SRM) 57-20-10

i. 737-400 Structural Repair Manual (SRM) 57-20-10

j. 737-500 Structural Repair Manual (SRM) 57-20-10

2. Data Supplied with this Service Bulletin:

None.

3. Installation Drawings Used in the Preparation of this Service Bulletin:

Drawing Number	Title
65-50820	Panel Instl -Upper Inbd. Fixed Trailing Edge, Wing.
65-45450	Rib Installation-Inspar. WBL 227.0
65-45449	Rib Installation-Inspar. WBL 198.60
65-45447	Rib Installation-Inspar. WBL 183.40
65-45446	Rib Installation-Inspar. WBL 157.0
65-45445	Rib Installation-Inspar. WBL 135.5
65-45407	Panel Instl - Inspar Wing, Upper
65-45321	Rear Spar Installation-Wing

The table above lists applicable drawings used to prepare this service bulletin. The drawings are not necessary to make the specified changes, and are not supplied with this service bulletin. The drawings may not be applicable to all airplane configurations or operators.

K. Publications Affected

1. Publications:

None.

2. Damage Tolerance Based Structural Inspections:

Boeing has evaluated the repairs and/or changes in this service bulletin for effects on Fatigue Critical Structure (FCS) and for changes to Damage Tolerance Inspections (DTI) required in the Maintenance Program. This service bulletin affects FCS but no new DTIs are necessary.

Export Controlled ECCN: 9E991 - BOEING PROPRIETARY - Copyright © Unpublished Work - See page 1 for details.

L. Interchangeability and Intermixability of Parts

Accomplishment of this service bulletin does not affect interchangeability or intermixability of parts.

M. Software Accomplishment Summary

Not affected.

Export Controlled ECCN: 9E991 - BOEING PROPRIETARY - Copyright © Unpublished Work - See page 1 for details.

2. MATERIAL INFORMATION

A. Material - Price and Availability

None.

B. Industry Support Information

Boeing warranty remedies are not available for the inspection procedures given in this service bulletin.

C. Parts Necessary for Each Airplane

1. Kits/Parts

   None.

2. Parts and Materials Supplied by the Operator

   None.

3. Parts Modified and Reidentified

   None.

4. Parts Removed and Not Replaced

   None.

D. Parts Necessary to Change Spares

None.

E. Special Tooling - Price and Availability

None.

F. Special Tooling Necessary to do this Service Bulletin

No special tools or equipment are necessary to do the change in this service bulletin. But, maintenance and overhaul tools in the manuals given in Paragraph 1.J., References, can be necessary. Examine operator tool supply to make sure all necessary tools are available.

Export Controlled ECCN: 9E991 - BOEING PROPRIETARY - Copyright © Unpublished Work - See page 1 for details.

BLANK PAGE

Export Controlled ECCN: 9E991 - BOEING PROPRIETARY - Copyright © Unpublished Work - See page 1 for details.

3. ACCOMPLISHMENT INSTRUCTIONS

A. GENERAL INFORMATION

CAUTION: KEEP THE WORK AREA, WIRES AND ELECTRICAL BUNDLES CLEAN OF METAL PARTICLES OR CONTAMINATION WHEN YOU USE TOOLS. UNWANTED MATERIAL, METAL PARTICLES OR CONTAMINATION CAUGHT IN WIRE BUNDLES CAN CAUSE DAMAGE TO THE BUNDLES. DAMAGED WIRE BUNDLES CAN CAUSE SPARKS OR OTHER ELECTRICAL DAMAGE.

NOTE: 1. Manual titles are referred to by acronyms. Refer to Paragraph 1.J., References, for definition of the acronyms.

2. Obey all of the warnings and cautions given in the specified manual sections.

3. Unless shown differently, these dimensions and tolerances are used:

- Linear dimensions are in inches
- Tolerance on linear dimensions, other than rivet and bolt edge margins, is plus or minus 0.03 inch
- Tolerance on rivet and bolt edge margin is plus or minus 0.05 inch
- Angular tolerance is plus or minus 2 degrees
- Hole dimensions for standard solid rivets and fasteners are in Structural Repair Manual (SRM) Chapter 51
- Torque Values:
  - Values for structural fasteners are given in 737 Structural Repair Manual, Chapter 51.
  - Values for airframe maintenance tasks are included in Chapter 20 of 737 Aircraft Maintenance Manual (AMM).
  - Values for electrical maintenance tasks are included in Chapter 20 of Standard Wiring Practices Manual (SWPM).
  - Values for engine maintenance tasks are included in Chapter 70 of 737 Aircraft Maintenance Manual (AMM).
  - Non-standard torque values for maintenance tasks are included in the applicable installation step.

4. Use the approved fastener, process and material substitutions in accordance with SRM Chapter 51.

5. A Detailed Inspection is defined as: An intensive examination of a specific item, installation, or assembly to detect damage, failure, or irregularity. Available lighting is normally supplemented with a direct source of good lighting at an intensity deemed appropriate. Inspection aids such as mirrors, magnifying lenses, etc. may be necessary. Surface cleaning and elaborate procedures may be required.

6. These work instructions refer to procedures included in other Boeing documents. When the words "refer to" are used and the operator has an accepted alternative procedure, the accepted alternative procedure can be used. When the words "in accordance with" are included in the instruction, the procedure in the Boeing document must be used.

Export Controlled ECCN: 9E991 - BOEING PROPRIETARY - Copyright © Unpublished Work - See page 1 for details.

7. Refer to Appendix A for logic diagram. Logic diagrams are provided as an aid only. Information contained in Paragraph 1.E., Compliance is the primary source for compliance times. Information in Paragraph 3.B., Work Instructions is the primary source for tasks required for compliance.

8. If it is necessary to remove more parts for access, you can remove those parts. If you can get access without removing identified parts, it is not necessary to remove all of the identified parts. Jacking and shoring limitations must be observed.

9. Use of colors in Figures is based on guidance from the ATA e-Business Program (ATA) iSpec 2200.

10. When more than one OPTION is given for a CONDITION, do only one of the OPTION numbers. When more than one ACTION is given for a CONDITION number or an OPTION number, do all of the ACTION numbers for that CONDITION number or OPTION number.

11. The compliance times for the actions in Paragraph 3.B., WORK INSTRUCTIONS are in Paragraph 1.E., Compliance.

12. Some steps in the Work Instructions are labeled as Required for Compliance (RC). If this service bulletin is mandated by an Airworthiness Directive (AD), then the steps labeled as RC, including sub-steps under an RC step and any figures identified in an RC step, must be done to comply with the AD. If a step or sub-step is labeled "RC Exempt," then the RC requirement is removed from that step or sub-step. An Alternative Method of Compliance (AMOC) is required for any deviations to RC steps, including sub-steps and identified figures. Steps not labeled as RC may be deviated from using accepted methods in accordance with the operator's maintenance or inspection program without obtaining approval of an AMOC. This is provided that the RC steps, including sub-steps and identified figures, can still be done as specified, and the airplane can be put back in an airworthy condition.

B. WORK INSTRUCTIONS

1. **Group 1:**
Boeing endorses the FAA rules related to Limit of Validity (LOV) and recommends immediate and permanent removal from service of any airplanes upon reaching the LOV, whether or not it is operated under FAA jurisdiction. As such, Boeing no longer provides maintenance instructions for airplanes that have accumulated flight cycles beyond the LOV. 737 Classic airplanes line numbers 1-291 have accumulated flight cycles beyond the LOV of the maintenance program. 14 CFR 121.1115 and 129.115 prohibit operation of an airplane beyond its LOV.

2. **Group 2:**

a. Deactivate the trailing edge flap system. Refer to 737-100/200 AMM 27-51-00 and 737-300/400/500 AMM 27-51-00 as an accepted procedure.

b. RC - Do PART 1: DETAILED INSPECTION OF THE UPPER WING AFT SKIN FROM WBL 159 TO 220 for any crack.

(1) CONDITION 1: ANY CRACK FOUND

Export Controlled ECCN: 9E991 - BOEING PROPRIETARY - Copyright © Unpublished Work - See page 1 for details.

(a) CONDITION 1 (ACTION 1): Contact The Boeing Company for repair instructions and do the repair.

(b) CONDITION 1 (ACTION 2): Repeat PART 1: DETAILED INSPECTION OF THE UPPER WING AFT SKIN FROM WBL 159 TO 220 for any crack in the unrepaired areas at the times specified in Paragraph 1.E., Compliance.

(2) CONDITION 2: NO CRACK FOUND

(a) Repeat PART 1: DETAILED INSPECTION OF THE UPPER WING AFT SKIN FROM WBL 159 TO 220 for any crack at the times specified in Paragraph 1.E., Compliance.

c. Activate the trailing edge flap system. Refer to 737-100/200 AMM 27-51-00 and 737-300/400/500 AMM 27-51-00 as an accepted procedure.

d. Put the airplane back to a serviceable condition.

Group 2:
PART 1: DETAILED INSPECTION OF THE UPPER WING AFT SKIN FROM WBL 159 TO 220

1. Do a detailed inspection of the upper aft skin for any crack in accordance with the figures below:

Left Wing	Right Wing
FIGURE 1	FIGURE 2

Export Controlled ECCN: 9E991 - BOEING PROPRIETARY - Copyright © Unpublished Work - See page 1 for details.

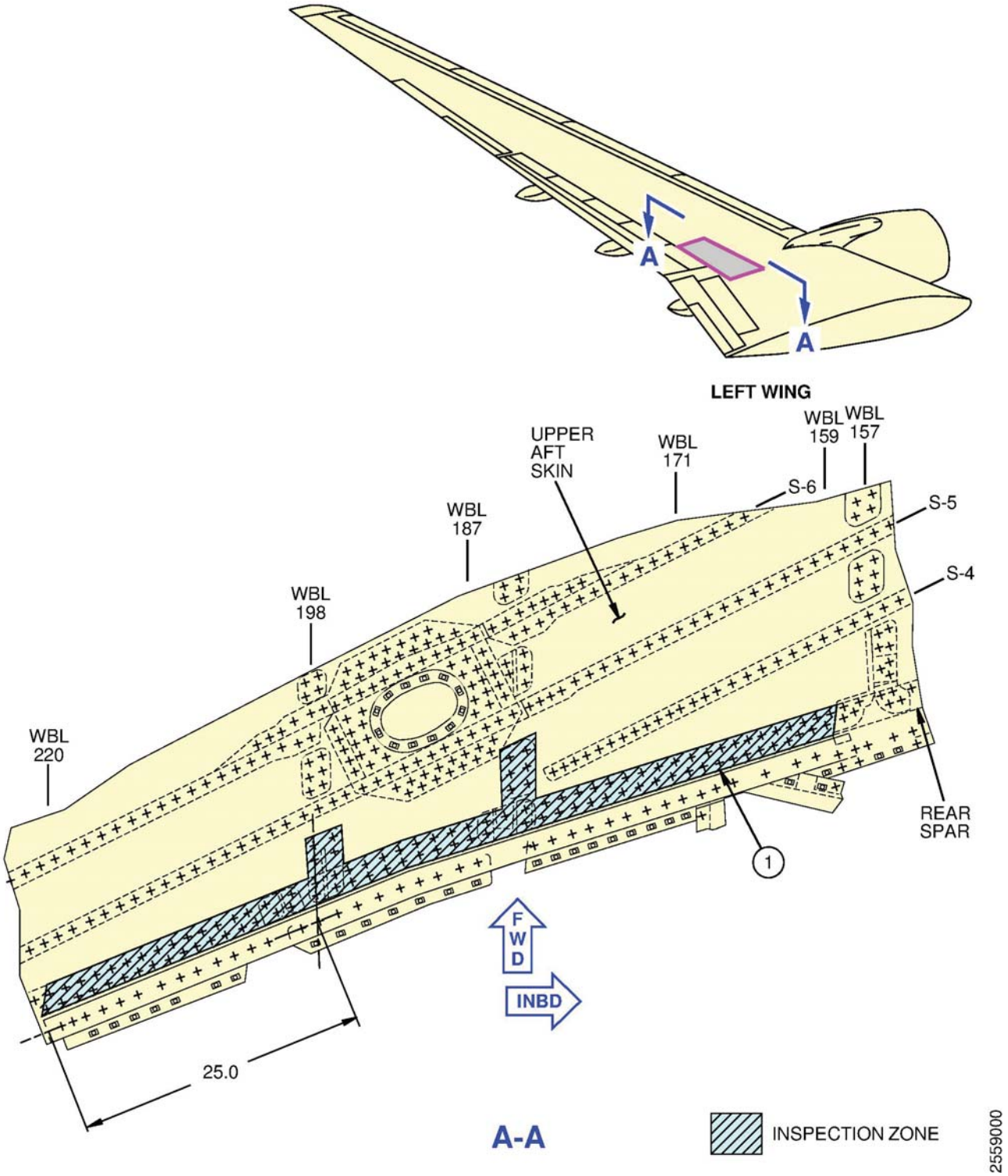

FIGURE 1: LEFT WING - DETAILED INSPECTION OF THE UPPER AFT SKIN FROM WBL 159 TO WBL 220
(SHEET 1 OF 2)

Export Controlled ECCN: 9E991 - BOEING PROPRIETARY - Copyright © Unpublished Work - See page 1 for details.

ALERT ALERT

The step numbers shown below agree with the numbers shown in the circle symbols in the figure. The QTY numbers shown below are the number of parts necessary for this figure.

Step	Task	Name	Identification	Qty	More Data
1	Inspect	UPPER AFT SKIN	-	-	(a)(b)
(a) Do a detailed inspection for any crack in the area shown. The boundary of the inspection area is 1.00 inch from the edge of the outer fasteners in the inspection area.					
(b) It is not necessary to do a detailed inspection in the areas of upper aft skin that are covered by an existing external repair configuration defined in Boeing Service Bulletin(s) 737-57A1326, 737-57A1328, or 737-57A1329. In addition, it is not necessary to do a detailed inspection in the areas of upper aft skin that are covered by an external repair installed as a result of the inspection done as specified in Boeing Service Bulletin(s) 737-57A1326, 737-57A1328, or 737-57A1329.					

FIGURE 1: LEFT WING - DETAILED INSPECTION OF THE UPPER AFT SKIN FROM WBL 159 TO WBL 220
(SHEET 2 OF 2)

Export Controlled ECCN: 9E991 - BOEING PROPRIETARY - Copyright © Unpublished Work - See page 1 for details.

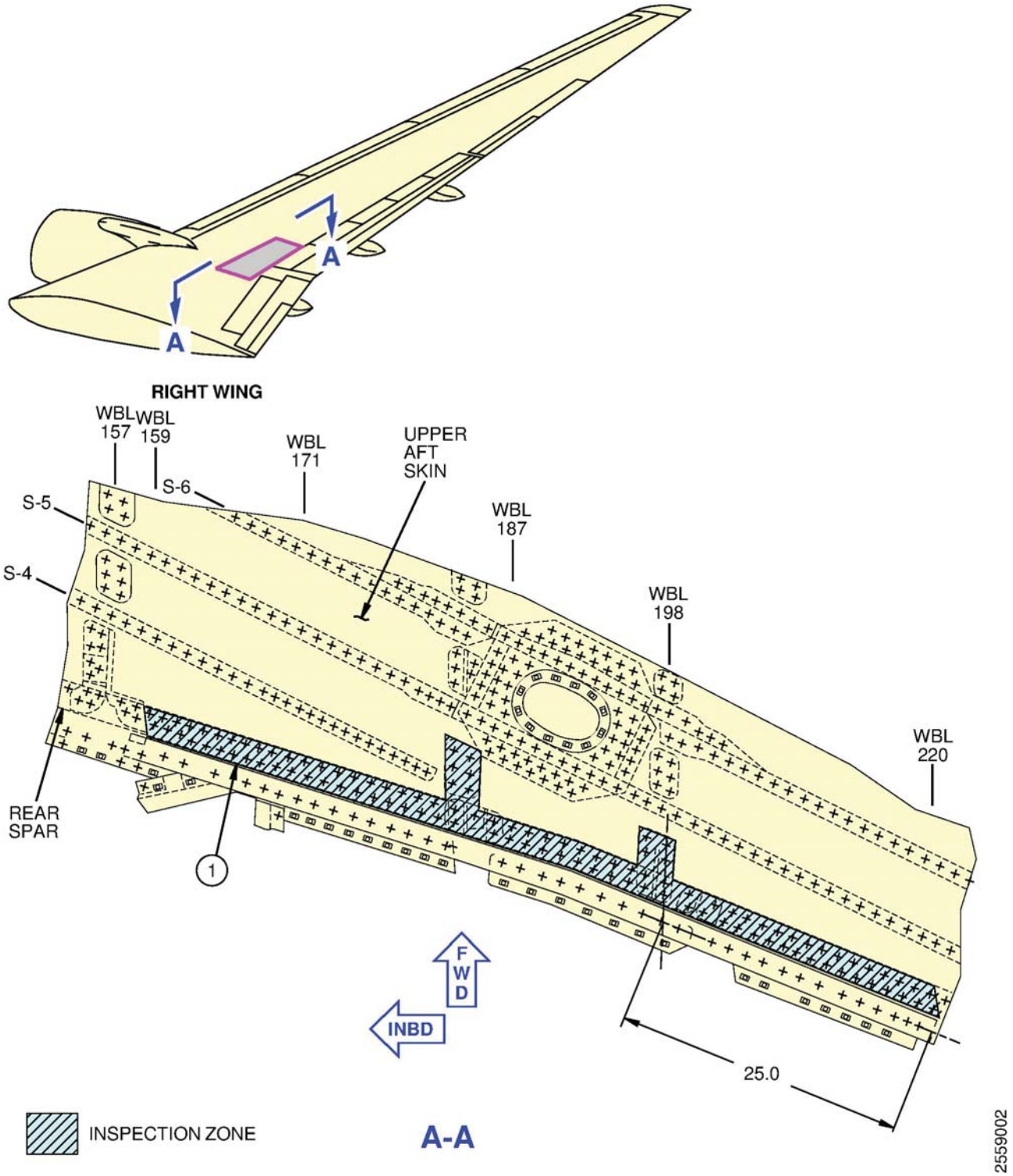

FIGURE 2: RIGHT WING - DETAILED INSPECTION OF THE UPPER AFT SKIN FROM WBL 159 TO WBL 220
(SHEET 1 OF 2)

Export Controlled ECCN: 9E991 - BOEING PROPRIETARY - Copyright © Unpublished Work - See page 1 for details.

ALERT ALERT

The step numbers shown below agree with the numbers shown in the circle symbols in the figure. The QTY numbers shown below are the number of parts necessary for this figure.

Step	Task	Name	Identification	Qty	More Data
1	Inspect	UPPER AFT SKIN	-	-	(a)(b)
(a) Do a detailed inspection for any crack in the area shown. The boundary of the inspection area is 1.00 inch from the edge of the outer fasteners in the inspection area.					
(b) It is not necessary to do a detailed inspection in the areas of upper aft skin that are covered by an existing external repair configuration defined in Boeing Service Bulletin(s) 737-57A1326, 737-57A1328, or 737-57A1329. In addition, it is not necessary to do a detailed inspection in the areas of upper aft skin that are covered by an external repair installed as a result of the inspection done as specified in Boeing Service Bulletin(s) 737-57A1326, 737-57A1328, or 737-57A1329.					

FIGURE 2: RIGHT WING - DETAILED INSPECTION OF THE UPPER AFT SKIN FROM WBL 159 TO WBL 220
(SHEET 2 OF 2)

Export Controlled ECCN: 9E991 - BOEING PROPRIETARY - Copyright © Unpublished Work - See page 1 for details.

Logic diagrams are provided as an aid only. Information contained in Paragraph 1.E., Compliance is the primary source for compliance times. Information contained in Paragraph 3.B., Work Instructions is the primary source for tasks required for compliance.

1. The table below gives the description for the parts and conditions called out in the logic diagrams.

Title	Description
PART 1	DETAILED INSPECTION OF THE UPPER WING AFT SKIN FROM WBL 159 TO 220
CONDITION 1	ANY CRACK FOUND
CONDITION 2	NO CRACK FOUND

2. The table below gives the description for the flag notes called out in the logic diagram.

Flag Note Letter	Description
(a)	Accomplishment of the open hole HFEC inspection of all the fastener holes in the inspection area is met if the inspection was done in accordance with 737 NDT Manual Part 6, 51-00-00 Procedure 1, Procedure 11 or Procedure 16 during the accomplishment of one the following: – 737-300 SRM 57-20-10 Repair 4, 737-400 SRM 57-20-10 Repair 4, or 737-500 SRM 57-20-10 Repair 4 for 737-300/400/500 Airplanes. – Boeing ODA FAA Form 8100-9 approved upper rear spar chord replacement repair. The inspection area is defined in FIGURE 1 and FIGURE 2.

APPENDIX A: LOGIC DIAGRAM FOR PARAGRAPH 1.E. COMPLIANCE: TABLE 1: DETAILED INSPECTION OF THE UPPER AFT SKIN ON THE LEFT OR RIGHT WING FROM WING BUTTOCK LINE (WBL) 159 TO WBL 220
(SHEET 1 OF 2)

Export Controlled ECCN: 9E991 - BOEING PROPRIETARY - Copyright © Unpublished Work - See page 1 for details.

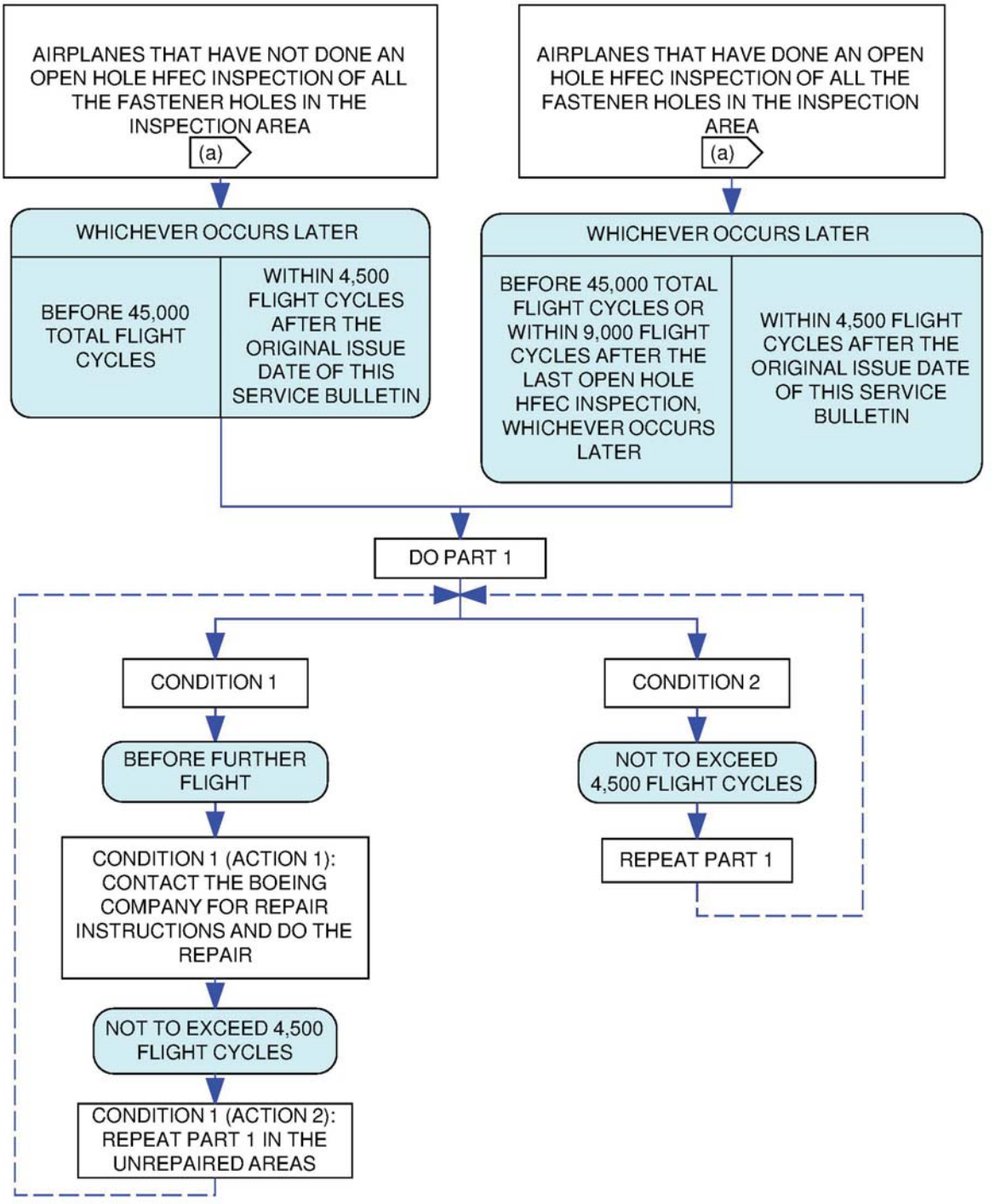

APPENDIX A: LOGIC DIAGRAM FOR PARAGRAPH 1.E. COMPLIANCE: TABLE 1: DETAILED INSPECTION OF THE UPPER AFT SKIN ON THE LEFT OR RIGHT WING FROM WING BUTTOCK LINE (WBL) 159 TO WBL 220
(SHEET 2 OF 2)

Export Controlled ECCN: 9E991 - BOEING PROPRIETARY - Copyright © Unpublished Work - See page 1 for details.