U.S. Department of Transportation

Federal Aviation Administration

Airworthiness Concern Sheet

Date: 3 September 2026

Reply to: **Name:** Michael Folkerts **Title:** Aviation Safety Coordinator **Office:** AIR-723 **Street Address:** 26805 E. 68th Ave. **City, State, ZIP:** Denver, CO 80239 **Telephone:** 720-763-1060 **Electronic Mail:** michael.j.folkerts@faa.gov	**Make:** Remos AG **Model / Series:** GX and GXiS **Serial Numbers:** SN251 and up **Reason for Airworthiness Concern:** Elevator Control Pushrod Failure

Federal Aviation Administration (FAA) Description of Airworthiness Concern

On July 12, 2026, a Remos GX airplane, registration N126GX, was substantially damaged during a forced landing following the pilot's loss of pitch control. As documented in NTSB preliminary report WPR26LA258, examination revealed that the rear elevator pushrod had fractured approximately three inches forward of the elevator quick disconnect. According to maintenance records, the fractured pushrod had been installed in December 2025 and accrued 445 hours in service. The cause of the accident is still under investigation, and the preliminary report is provided as an enclosure.

The elevator pushrod and bearings were recently the subject of Remos Safety Alert SA-009 dated June 30, 2026 (preceded by SA-008 dated November 19, 2025) and is also provided as an enclosure. The safety alert notifies owners and operators of potential friction damage that occurred between the pushrod and pushrod bearings, with instructions to inspect for damage and to apply a protective liner to the pushrods. The FAA has been notified that the accident aircraft completed the requirements of the safety alert.

As seen on the accident aircraft, failure of the elevator pushrod may lead to loss of control of the aircraft. The FAA is currently investigating this concern.

Request for Information

The FAA is interested in receiving information involving abnormalities of the elevator control system pushrod, including but not limited to, cracking, corrosion, indications of fatigue, interference, or other signs of damage. Reporting of occurrences should not be limited to those discovered while complying with SA-009.

If you discover any issues, please report your findings to the FAA point of contact. Please include a description of any abnormality, including the location and photographs; inspection techniques that are recommended to locate the abnormality; the aircraft's registration and serial number; the time in service of the involved part; and any other information that may assist in our evaluation of this issue.

This Airworthiness Concern Sheet (ACS) is intended as a means for FAA Aviation Safety Engineers to coordinate airworthiness concerns with aircraft owners/operators through associations and type clubs. At this time, the FAA has not made a determination on what type of corrective action (if any) should be taken. The resolution of this airworthiness concern could involve Airworthiness Directive (AD) action or a Special Airworthiness Information Bulletin (SAIB), or the FAA could determine that no action is needed at this time. The FAA's final determination will depend in part on the information received in response to this ACS. The FAA endorses dissemination of this technical information to all manufacturers and requests association and type club comments.

Attachments:	**Transmittal:**	**Response Requested By:**
☐ Service Difficulty Report		☐ Emergency (10 days)
☒ Accident/Incident Data System	☒ Federal Aviation Administration	☒ Alert (30 days)
☒ Service Letter / Bulletin	☒ Airplane Owners and Pilots Association	☐ Information
Special Airworthiness Information Bulletin	☒ Experimental Aircraft Association	
☐ Federal Aviation Administration or	☐ Type Club	

National Transportation Safety Board Safety Recommendation ☐ Airworthiness Directive ☐ Alternate Means of Compliance ☐ Risk Analysis	☐ Type Certificate Holder ☐ Other:	(90 days)

Aviation Investigation Preliminary Report

Location:	Glendale, AZ	**Accident Number:**	WPR26LA258
Date & Time:	July 12, 2026, 10:18 Local	**Registration:**	N126GX
Aircraft:	REMOS ACFT GMBH FLUGZEUGBAU REMOS GX	**Injuries:**	2 None
Flight Conducted Under:	Part 91: General aviation - Instructional		

On July 12, 2026, at 1018 mountain standard time, a Remos GX airplane, N126GX, was substantially damaged when it was involved in an accident near Glendale, Arizona. The flight instructor and student pilot were uninjured. The airplane was operated as a Title 14 *Code of Federal Regulations* Part 91 instructional flight.

According to the flight instructor, the student pilot was practicing landings at Glendale Regional Airport (GEU), Glendale, Arizona. The student performed a go around and, during the initial climb, he stated that the airplane's pitch control was "delayed." After taking the flight controls the instructor observed that the airplane did not respond to pitch control inputs.

The flight instructor was able to maneuver the airplane using the ailerons, rudder, full nose up pitch trim, and engine power. During the final approach to runway 01, the airplane lost altitude and impacted terrain, resulting in substantial damage to the airplane's fuselage.

Examination of the airplane revealed that the rear elevator control rod had fractured about three inches forward of the elevator quick disconnect. (See figure 1.)

This information is preliminary and subject to change.

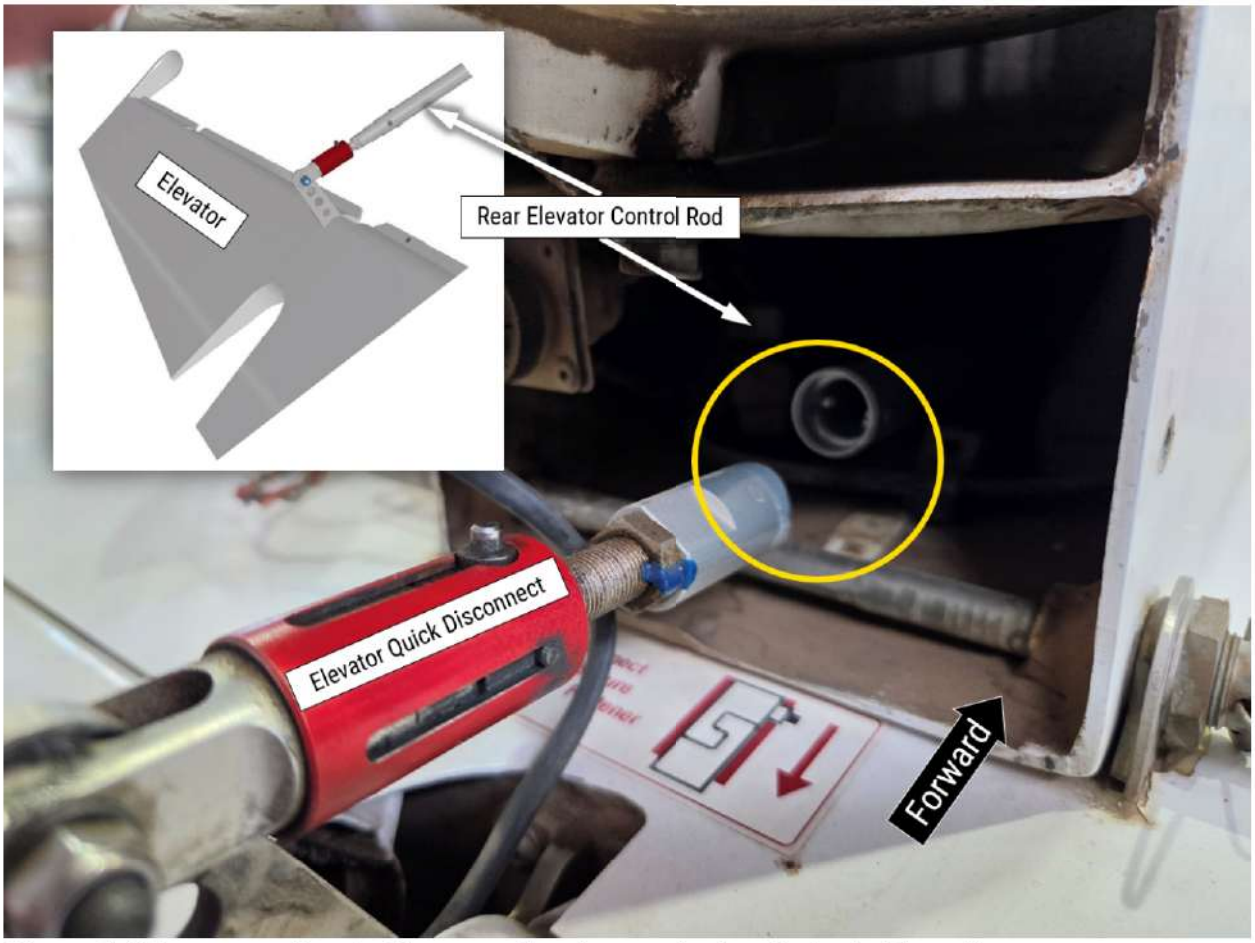

Figure 1: The separation in the rear elevator control rod, circled in yellow.

According to maintenance records, the rear elevator control rod had been installed in December 2025 and had accrued 445 hours in service.

The airplane wreckage was retained for further examination.

Aircraft and Owner/Operator Information

Aircraft Make:	REMOS ACFT GMBH FLUGZEUGBAU	**Registration:**	N126GX
Model/Series:	REMOS GX	**Aircraft Category:**	Airplane
Amateur Built:			
Operator:	On file	**Operating Certificate(s) Held:**	None
Operator Designator Code:			

This information is preliminary and subject to change.

Meteorological Information and Flight Plan

Conditions at Accident Site:	VMC	**Condition of Light:**	Day
Observation Facility, Elevation:	KGEU,1066 ft msl	**Observation Time:**	10:00 Local
Distance from Accident Site:	0 Nautical Miles	**Temperature/Dew Point:**	36°C /16°C
Lowest Cloud Condition:	Few	**Wind Speed/Gusts, Direction:**	6 knots / None, 300°
Lowest Ceiling:	None	**Visibility:**	9 miles
Altimeter Setting:	29.9 inches Hg	**Type of Flight Plan Filed:**	
Departure Point:	Glendale, AZ	**Destination:**	Glendale, AZ

Wreckage and Impact Information

Crew Injuries:	2 None	**Aircraft Damage:**	Substantial
Passenger Injuries:		**Aircraft Fire:**	None
Ground Injuries:		**Aircraft Explosion:**	None
Total Injuries:	2 None	**Latitude, Longitude:**	33.526917,-112.29513

Administrative Information

Investigator In Charge (IIC):	Whitaker, Kathryn
Additional Participating Persons:	Chuck Baxter; Federal Aviation Administration; Scottsdale, AZ Stefan Maser; Bundesstelle für Flugunfalluntersuchung; Braunschweig
Investigation Class:	Class 3
Note:	The NTSB did not travel to the scene of this accident.

This information is preliminary and subject to change.

Safety Alert

Inspection of Elevator Pushrods and Their Bearings

MANDATORY

Symbols:

Please pay attention to the following symbols emphasizing particular information throughout this document.

▲ WARNING: Identifies an instruction, which if not followed, may cause serious injury or even death.

▮ CAUTION: Denotes an instruction which if not followed, may severely damage the aircraft / engine or could lead to suspension of warranty.

♦ NOTE: Information useful to implement the change more easily.

1. General

Issued by:	STEMME GmbH, Flugplatzstrasse F2 Nr. 7, 15344 Strausberg, Germany
Contact details:	web: www.remos.com – email: info@stemme.com – telephone: +49-3973-225519-0
Release date:	30. Jun. 2026
Date of effect:	immediately
Compliance:	At next 100h maintenance or next annual condition inspection, whatever comes first.
Release number:	SA-009-elevator pushrods
Superseded notice:	SA-008-elevator pushrods
Referenced documents:	none
Models affected:	GX, GXiS

 Copyright Stemme GmbH

Safety Alert

Affected S/N:	SN251 and up
Reason:	An elevator control system with untypically high friction has been found on a REMOS GX. Detailed inspection revealed a damaged bearing of a pushrod of the elevator control system causing damage to that pushrod. This safety alert provides information on inspecting the control system for safe condition.
Subject:	Inspection of elevator pushrods and their bearings and application of a protective liner on the pushrods.
Level of maintenance:	heavy
▲ WARNING:	As per referenced document: “non-compliance with the instructions could result in further damages, personal injuries or even fatal injuries.”
Weight and Balance:	no effect
Approval:	This safety alert is approved by the aircraft manufacturer i.a.w. ASTM F3198 for conduct on aircraft as defined above. Subsequent to complete and correct conduct of this safety alert, the aircraft will still meet the requirements of the applicable ASTM design and performance specification.
License required:	US-LSA • owner/operator with Sport Pilot Licence (or higher) • LSA Repairman, or • A&P Mechanic, or • Part 145 Repair Station EASA or CAA PtF appropriately rated certifying staff
Release to service:	After checking without issues the aircraft is released back to service by logging this safety alert with date and signature and license number of the responsible person in the aircraft logs. In case issues are detected in the inspection described below, release process is
Disclaimer	This safety alert has been prepared with utmost care. Nevertheless, errors and misunderstandings can never be fully excluded. In case of any doubts the applicant of this safety alert is requested to contact Stemme immediately to clarify the issue.

 Copyright Stemme GmbH

Safety Alert

2. Change to Superseded Safety Alert

1. REMOS G3-600 has been excluded from the Safety Alert. Only REMOS GX and GXiS are affected. The REMOS G3-600 features a different design of the pushrods and bearings that is not directly comparable to the GX. A separate publication for the G3-600 is currently under consideration.

2. Advise on selection of shrink hose has been added.

Aircraft that have already been inspected and on which the pushrods are either within acceptance criteria or on which the pushrods have been exchanged, do not need to undergo an inspection immediately. Only the recurring actions of section 5 of this safety alert (section 4 in the superseded safety alert SA-008) apply.

3. Resources

Workshop Conditions:	no specific conditions	
Parts needed:	3 ea. nylstop nuts M6	
	G3-8_CS-10-00-05-R02	front pushrod, if so required
	G3-8_CS-10-00-06-R02	rear pushrod, if so required
Material needed:	min. 60cm (app. 24 inches) of shrink hose, see section 4.4 for advice	
Tools:	standard tools	
Special Tools:	none	
Manpower:	approximately 4 hours	

 Copyright Stemme GmbH

4. Instructions

4.1. System Overview

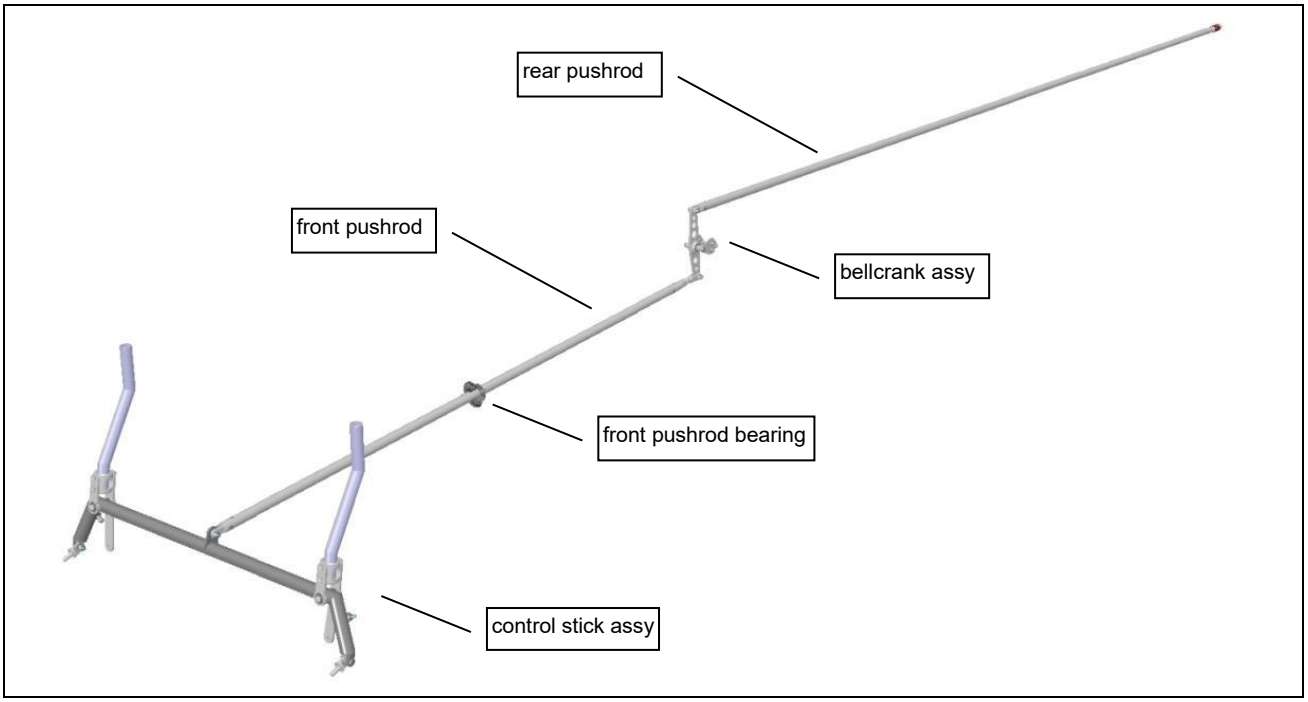

overview of the elevator control system

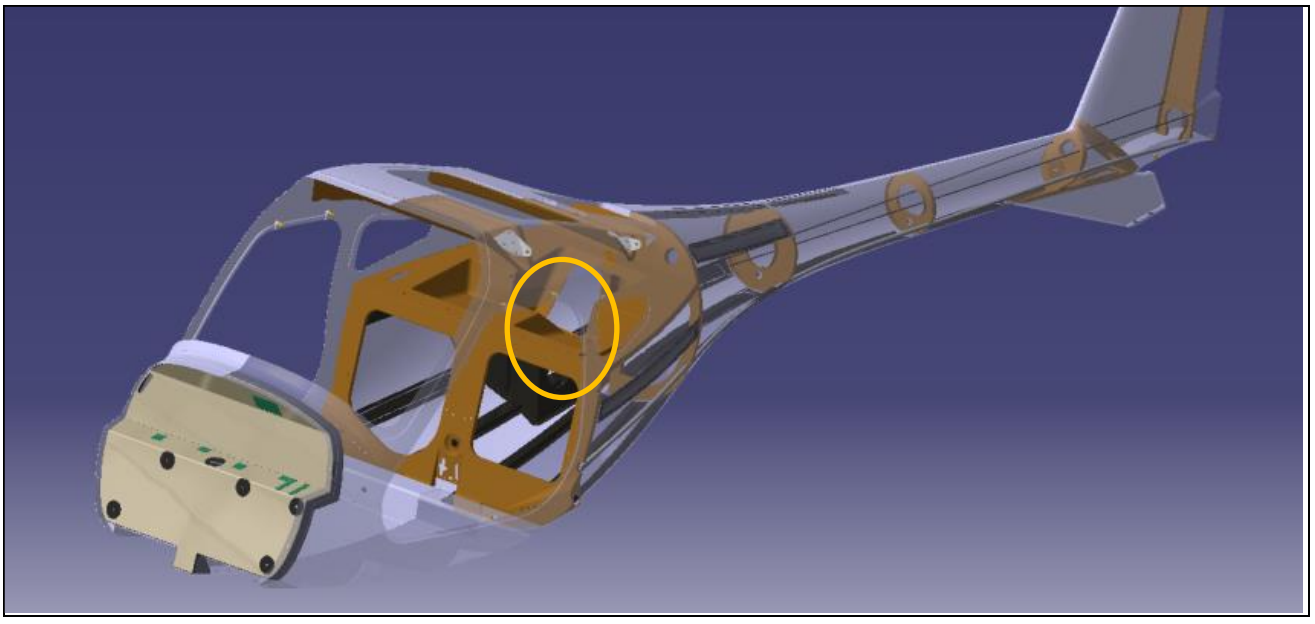

position of bellcrank assy on ring frame 1

 Copyright Stemme GmbH

Safety Alert

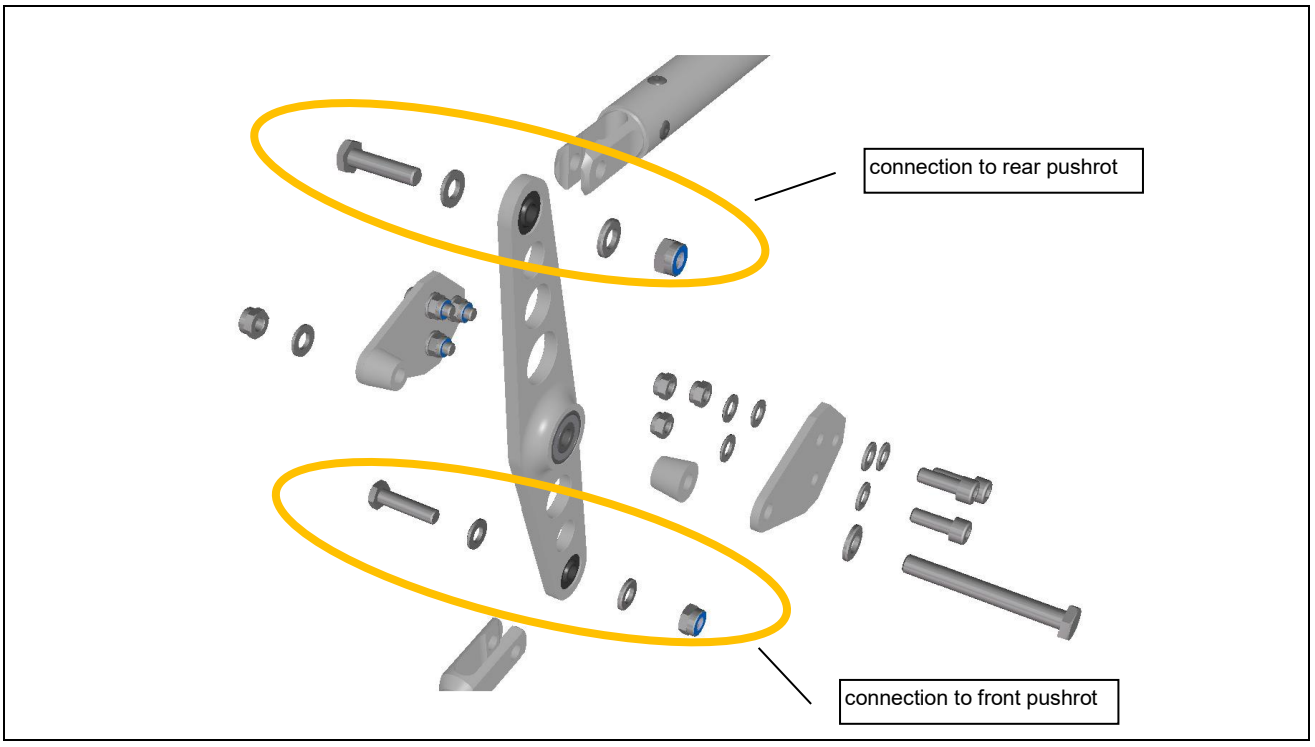

connection of pushrods on bellcrank assy

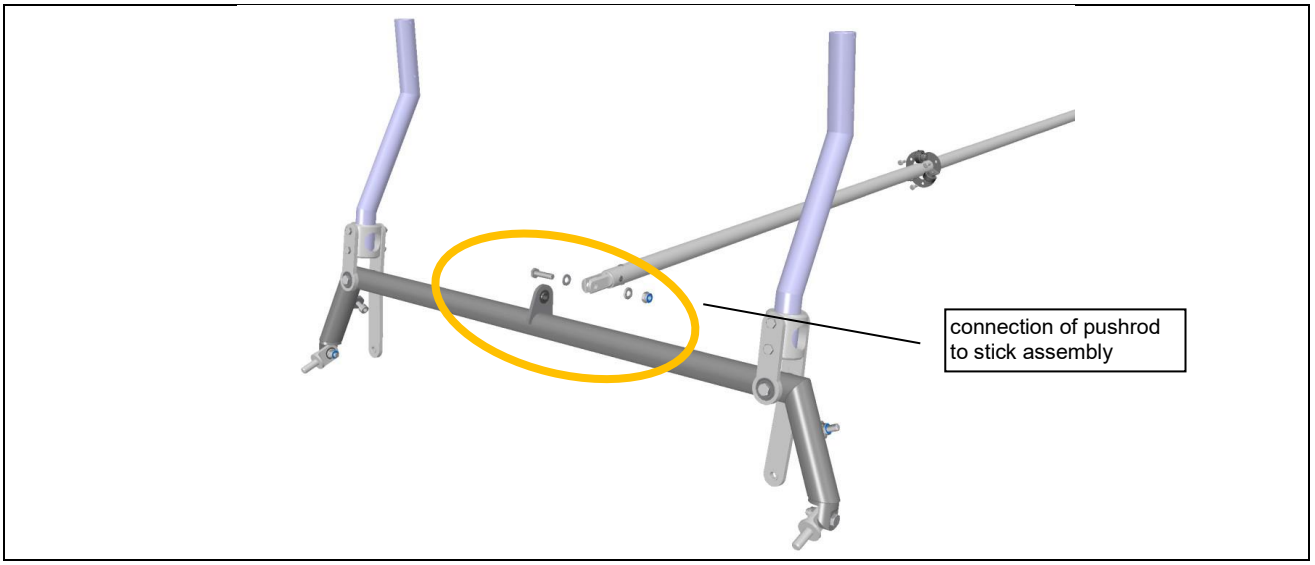

connection of front pushrod to stick assembly

 Copyright Stemme GmbH

4.2. Disassembly

1. Park the aircraft, preferably in a hangar and set parking brakes.
2. Take out pilot and copilot seat.
3. Uninstall the center console cover:
   a. Peel out the colored cover in the parking valve lever (red or blue color, use a small blade screwdriver), unscrew the Philips head screw underneath the cover and take-off the lever.
   b. Two hex bolts are in the front, next to the brake lever.
   c. Two more screws fix the cover to the baggage compartment frame.
4. Take out the baggage compartment:
   a. Two bolts fix the baggage compartment to the frame behind the seats.
   b. Another screw is found half way into the compartment on the left side of the floor to fix the compartment to a bracket in the fuselage.
   c. Pull the compartment out after having taken out the three bolts.
5. Uninstall the tailcone:
   a. Release the two screws attaching it to the fuselage
   b. Disconnect the electric wiring for the taillight (if so equipped).
6. Uninstall stick fairings
   a. Take out carpets overing the stick fairings (if so equipped) on both pilot and copilot side
   b. Lift the leather bag around the from the stick fairings (both sides)
   c. Uninstall the stick fairings (hex screws) on both pilot and copilot side
7. Uninstall the front elevator pushrod:
   a. Uninstall connection to autopilot servo (if so equipped).
   b. Uninstall the front elevator pushrod from the bellcrank assy.
   c. Uninstall pushrod from stick assembly
   d. Pull out the pushrod to the rear.

 Copyright Stemme GmbH

8. Uninstall the rear elevator pushrod
    a. Disconnect the quick connector to the elevator.
    b. Uninstall the rear elevator pushrod from the bellcrank assy.
    c. Pull out the pushrod from the uninstalled tailcone.

4.3. Inspection

1. Inspect the pushrods:
    a. Visual inspection of pushrods, slight marks of abrasion may be visible.
    b. Measure abrasion on pushrods. Acceptance criteria are given in section 3.5.
2. Inspect all pushrod bearings (1 for front pushrod, 3 for rear pushrod)
    a. Visually inspect bearings using a boroscope, a small camera, etc. Slight marks of abrasion, but no damage may be visible on bearings.
    b. Acceptance criteria are given in section 3.5.

4.4. Protection of Pushrods

1. Clean and degrease the pushrods. Then apply min. 15cm (min. 6 inches) of shrink hose on the pushrods on the location of the bearings. The middle of the shrink hose shall be at the location of the bearing with the control system in neutral position.
2. In any case, the shrink hose must be long enough, so the bearings are running on shrink hose in any extreme position of the elevator. Applying the shrink hose on the full length of the pushrod is also acceptable.

Application of the shrink hose slightly increases the diameter of the pushrod. This will lead to slightly increased friction in the control system, but this effect is generally very small. Increased friction can be minimized with following means:

1. Use the smallest diameter of shrink hose that just fits over the pushrod. The nominal diameter of the pushrods is 20mm.
2. Do not use shrink hose with integrated bonding or sealant.
3. Using a higher shrink ratio will result in smaller thickness when shrunk.
4. Use shrink hose with thin wall thickness.
5. Prefer PCV shrink hose with slick surface

 Copyright Stemme GmbH

4.5. Acceptance Criteria for Pushrods and Bearings

Bearings: The bearings do not take up defined load. They only support the pushrod and prevent buckling. Therefore, the only criterion is that they must be movable.

Signs of abrasion and even cracks in the plastic liner are acceptable.

Pushrods: The pushrods will show abrasion on the location of the bearings



typical abrasion after app. 500h TTAF



high abrasion after app. 5.000h TTAF, measurement required

Due to the prevailing tolerances of the pushrods (protruded aluminum tubes), measuring the abrasion is a 2-step procedure.

1. Measure the outer diameter of the pushrod outside the bearing area. Nominal diameter is 20mm.
2. Measure area with abrasion. A max. material removal of 0,1mm is acceptable in any location.

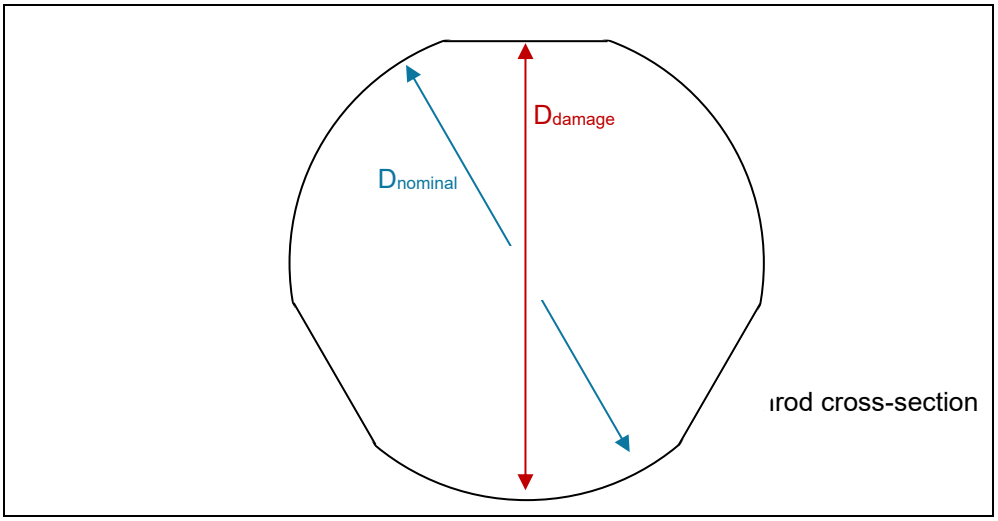

ırod cross-section

$D_{damage} \geq D_{nominal} - 0{,}1$ mm in any location

 Copyright Stemme GmbH

4.6. Reassembly of the Aircraft

1. After inspection and application of shrink hose, reassemble aircraft in reverse sequence.
2. Use new nylstop nuts.

4.7. Repair Instruction of Pushrods

The pushrods cannot be repaired and must be replaced.

4.8. Repair Instruction of Bearings

Contact Stemme for individual repair instructions.

5. Recurring Actions

1. Inspection of pushrods and bearings must be repeated after any 500h.
2. Follow instructions provided in section 4.
3. Renew shrink hoses as required.

6. Feedback

Use the following feedback form to report to Stemme.

 Copyright Stemme GmbH

Safety Alert

Aircraft ID

Aircraft Model	☐ G3/600	☐ GX	S/N	_____
Certification	☐ ASTM-LSA	☐ EASA PtF	other	_____
Kind of Operation	☐ private use only	☐ flying club	TTSN	_____
	☐ flight school	☐ commercial		

Owner/Operator

Company / DBA	_____
Name SURNAME	_____
Address	_____
ZIP, City	_____
Country	_____
email	_____

Feedback

abrasion	☐ no	☐ yes, in following location(s): _____
damages	☐ no	☐ yes, in following location(s): _____
spare parts needed	☐ no	☐ yes: _____
need repair instruction	☐ no	☐ yes:

_____	_____	_____	_____
city, date	Name SURNAME	rating/license no.	signature

submit to info@stemme.com

Copyright Stemme GmbH