Pratt & Whitney
A United Technologies Company

ALERT SERVICE BULLETIN REVISION NOTICE

ENGINE — RING SEGMENT, ASSEMBLY, AIR SEALING, LOW PRESSURE TURBINE (LPT), 4TH STAGE — REPLACE THE LPT 4TH STAGE AIR SEALING RING SEGMENT ASSEMBLIES AND EXAMINE THE LPT CASE FOR BULGING

Turbojet Engine Service Bulletin No. PW4G-100-A72-262 Revision No. 1 dated September 3, 2020.

Revision History

Original Issue October 22, 2019

Revision 1 September 3, 2020

Reason for the Revision

To remove engines from the applicable engine serial numbers for engine models PW4164, PW4168, and PW4168A, so that this Service Bulletin only applies to serial numbers P733301 thru P733692.

To revise the Reason Section to remove references to the Talon IIA and Talon IIB outer combustion chamber configurations.

To add References 5 and 6 in the References Section.

To revise the Compliance Category to include a code of 6 for engines with non-talon combustor configurations.

To add to the Compliance Section, under category code 6, which engine models include the non-talon combustor configurations.

To add to the Compliance Section, under category code 4, which engine models include the talon combustor configurations.

To correct the progression chart in Figure 3 to include this Service Bulletin's number.

Effect of Revision on Prior Compliance

Operators should review this revision to make sure that they are in compliance with the revised Engine Effectivity in the Planning Section of this Service Bulletin.

This is a Complete Revision (Not Applicable to the SGML version)

The contents are in accordance with the list of effective pages. All pages have the current revision number. Technical changes are marked with black bars.

MODEL APPLICATION

PW4164, PW4164-1D, PW4168, PW4168-1D, PW4168A, PW4168A-1D, PW4170

BULLETIN ISSUE SEQUENCE

PW4G-100 Series A72-262

Page	Revision No.	Date
1 thru 18	1	September 3/20

A copy of this Revision Notice and any future revision notices must be filed as a permanent record with your copy of the subject bulletin.

P&W Distribution Code
2639

PW4G-100-A72-262

Published in United States of America

Not subject to the EAR per 15 C.F.R. Chapter 1, Part 734.3(b)(3).

Pratt & Whitney
A United Technologies Company

ALERT SERVICE BULLETIN

ENGINE — RING SEGMENT, ASSEMBLY, AIR SEALING, LOW PRESSURE TURBINE (LPT), 4TH STAGE — REPLACE THE LPT 4TH STAGE AIR SEALING RING SEGMENT ASSEMBLIES AND EXAMINE THE LPT CASE FOR BULGING

MODEL APPLICATION

PW4164, PW4164-1D, PW4168, PW4168-1D, PW4168A, PW4168A-1D, PW4170

BULLETIN ISSUE SEQUENCE

PW4G-100 Series A72-262

ATA NUMBER

72-53-00

UTC/P&W PROPRIETARY INFORMATION

This document is the property of United Technologies Corporation — Pratt & Whitney (UTC/P&W). You may not possess, use, copy or disclose this document or any information in it, for any purpose, including without limitation to design, manufacture, or repair parts, or obtain FAA or other government approval to do so, without UTC/P&W's express written permission. Neither receipt nor possession of this document alone, from any source, constitutes such permission. Possession, use, copying or disclosure by anyone without UTC/P&W's express written permission is not authorized and may result in criminal and/or civil liability.

Export Classification: Not subject to the EAR per 15 C.F.R. Chapter 1, Part 734.3(b)(3).

Compliance Category

4, 6

P&W Distribution Code

2639

October 22/19

REVISION NO. 1 - September 3/20

Published in United States of America

Summary

The function of this Alert Service Bulletin (ASB) is to replace the Low Pressure Turbine (LPT) 4th stage air sealing ring segment assemblies and examine the LPT case for bulging. LPT 4th stage vanes leaned back which caused LPT 4th stage blade fractures, LPT 4th stage blade airfoil notching, and Unplanned Engine Removals (UERs).

Planning Information

Effectivity Data

Engine Models Applicable

PW4164, PW4168, PW4168A
Engine Serial Nos. P733301 thru P733692

PW4168A-1D, PW4170
Engine Serial Nos. P735001 thru P735190

This Alert Service Bulletin also applies to engines converted to the PW4164-1D, PW4168-1D, PW4168A-1D, PW4170 models by Reference 9, SB No. PW4G-100-72-220

Concurrent Requirements

There are no concurrent requirements.

Reason

1. Problem: LPT 4th stage vane lean back can occur on PW4000-100 inch engines which causes LPT 4th stage blade airfoil notching, LPT 4th stage blade fracture, and UERs. This lean back occurred on a number of engines and caused an aborted takeoff, an air turnback, engine surge during descent, and vibration indications that were more than the maximum limits.
2. Cause: During service, the LPT 4th stage air sealing ring segment assemblies can sufficiently move into the LPT 4th stage blades knife edge seals which causes damage to the ring segment assemblies and lets gaspath air impinge on the LPT case. This can distort (local bulging) the LPT case rail, which results in LPT 4th stage vane lean back and damage to the LPT 4th stage blades.
3. Solution: Replace the LPT 4th stage air sealing ring segment assemblies and do a dimensional inspection of the LPT case for bulging.

Description

Replace the LPT 4th stage air sealing ring segment assemblies with new LPT 4th stage air sealing ring segment assemblies and do a dimensional inspection of the LPT case for bulging.

UTC/P&W PROPRIETARY INFORMATION
Not subject to the EAR per 15 C.F.R. Chapter 1, Part 734.3(b)(3).

Compliance

For PW4164, PW4168, PW4168A engines installed with the Talon IIA Outer Combustion Chamber Assembly, PN 51J100 or PN 51J382, by Reference 8, SB No. PW4G-100-72-179, or Reference 12, SB No. PW4G-100-72-253 or the Talon IIB Outer Combustion Chamber Assembly, PN 51J381 or PN 51J500, by Reference 9, SB No. PW4G-100-72-214, Reference 10, SB No. PW4G-100-72-219, or Reference 12, SB No. PW4G-100-72-253.

And

For PW4168A-1D and PW4170 engines.

Category 4

Do when the engine or module first goes to a maintenance base which can do these procedures regardless of the scheduled maintenance action or the reason for engine removal.

Each time an LPT module is disassembled sufficiently to get access to the LPT 4th stage air sealing ring segment assemblies, it is necessary to replace the LPT 4th stage air sealing ring segment assemblies with new and do a check of the LPT case for bulging.

NOTE: "First visit" is classified as the next induction of an engine into the shop for maintenance involving separation of pairs of major mating engine flanges, except the separation of engine flanges solely for the purposes of transportation without subsequent engine maintenance does not constitute an engine shop visit. A "major mating engine flange" is considered flanges H through P. For location of flanges, refer to Reference 3, Engine Manual, Chapter/Section 72-00-00 Engine General, Description/Operation-01, Figure 6.

For PW4164, PW4168, PW4168A engines installed with the non-Talon Outer Combustion Chamber Assembly, PN 52J200, or 54J200, by Reference 5, SB No. PW4G-100-72-13, or PN 54J300, or PN 52J200-001, by Reference 6, SB No. PW4G-100-72-74 or PN 54J300-001, by Reference 12, SB No. PW4G-100-72-253.

Category 6

Do when the subassembly (e.g. modules, accessories, components, build groups) is disassembled sufficiently to give access to the changed part and to all changed spare parts.

Approval Data

The part number changes and/or part changes specified in the Material Information section and Accomplishment Instructions of this Alert Service Bulletin agree with the applicable Federal Aviation Regulations and are FAA-Approved for the engine model(s) given.

This Alert Service Bulletin does not contain any change information that revises the equipment definition covered by Airbus approved modifications.

Manpower

The estimate of man-hours of labor directly necessary to do the intent of this Alert Service Bulletin are as follows:

1. Necessary for Replacement 50.0
2. Necessary for Inspection 2.0
3. Total Necessary Man-hours 52.0

UTC/P&W PROPRIETARY INFORMATION
Not subject to the EAR per 15 C.F.R. Chapter 1, Part 734.3(b)(3).

Weight Data

No Change.

Electrical Load Data

Not Applicable.

Software Accomplishment Summary

Not Applicable.

References

1. Turbojet Engine Standard Practices Manual, Part No. 585005.
2. PW4164, PW4168, PW4168A, PW4170 Turbofan Engines, Illustrated Parts Catalog, Part No. 51A343.
3. PW4164, PW4164-1D, PW4164C, PW4164C-1D, PW4164C/B, PW4164C/B-1D, PW4168, PW4168-1D, PW4168A, PW4168A-1D, PW4170 Turbofan Engines, Engine Manual, Part No. 51A342.
4. PW4000 Series Turbofan Engines, Engine Cleaning, Inspection And Repair (CIR) Manual, Part No. 51A357.
5. Service Bulletin No. PW4G-100-72-13; Engine — Chamber Assembly, Outer Combustion - Replace With A New Chamber That Weighs Less Than The Present One. Issue Sequence 72-13, PW4G-100 Series.
6. Service Bulletin No. PW4G-100-72-74; Engine - Chamber Assembly, Outer Combustion - Modification Of To Incorporate A Spark Igniter Guide That Will Not Rotate. Issue Sequence 72-74, PW4G-100 Series.
7. Service Bulletin No. PW4G-100-72-76; Engine — Ring Segment Assemblies, 3rd Thru 5th Stage Low Pressure Turbine (LPT) Air Sealing — Introduction Of Ring Segments With Overhung Honeycomb Seals. Issue Sequence 72-76, PW4G-100 Series.
8. Service Bulletin No. PW4G-100-72-179; Engine — Diffuser And Combustor — Introduction Of The Talon II Combustor System For Delivered Engines To Reduce Engine Emissions. Issue Sequence 72-179, PW4G-100 Series.
9. Service Bulletin No. PW4G-100-72-214; Engine — Chamber Assemblies, Inner And Outer Combustion — Introduction Of The Talon IIB To Reduce Combustor Exit Temperature At The Outer Diameter. Issue Sequence 72-214, PW4G-100 Series.
10. Service Bulletin No. PW4G-100-72-219; Engine — Modification Of, To Incorporate The Advantage70™; Performance And Durability Upgrade Kit To Improve Engine Reliability And Reduce Thrust Specific Fuel Consumption. Issue Sequence 72-219, PW4G-100 Series.
11. Service Bulletin No. PW4G-100-72-220; Engine — Conversion Of A PW4164, PW4168, Or PW4168A Engine To A PW4164-1D, PW4168-1D, PW4168A-1D, Or PW4170 Engine. Issue Sequence 72-220, PW4G-100 Series.
12. Service Bulletin No. PW4G-100-72-253; Engine — Nuts, Chamber Assembly, Outer Combustion - Replacement Of, With Waspaloy Nuts To Reduce Nut Liberation. Issue Sequence 72-253, PW4G-100 Series.

NOTE: Reference 7 is shown to help find configurations in relation to this bulletin.

NOTE: References 5, 6, and 8 thru 11 are shown to help find non-production configurations that may incorporate this bulletin.

UTC/P&W PROPRIETARY INFORMATION
Not subject to the EAR per 15 C.F.R. Chapter 1, Part 734.3(b)(3).

Publications Changed

PW4164, PW4168, PW4168A, PW4170 Turbofan Engines, Illustrated Parts Catalog, Part No. 51A343.

72-53-00, Figures 3 and 4.

PW4000 Series Turbofan Engines, Engine Cleaning, Inspection And Repair (CIR) Manual, Part No. 51A357.

Interchangeability

Old and new parts are interchangeable only in full sets.

Information in the Appendix

Alternate Accomplishment Instructions (No)

Progression Charts (Yes)

Added Data (Yes)

Revision to Table of Limits (No)

Inspection Procedures (No)

UTC/P&W PROPRIETARY INFORMATION
Not subject to the EAR per 15 C.F.R. Chapter 1, Part 734.3(b)(3).

Material Information

Material — Cost and Availability

1. The estimated price of new material to do this Alert Service Bulletin using new replacement parts is $64,592.00.
2. There is no kit provided to do this Service Bulletin.
3. Part availability information is provided in material data Instructions — Disposition.

Industry Support Program

Not Applicable.

The material data that follows is for each engine.

NOTE: It is possible to use the Chapter/Section and Figure/Item reference number shown below the old part number to find the part in the Illustrated Parts Catalog.

Because there are many different configurations used, it is frequently necessary to show more than one group of parts. When this occurs, parts that are interchangeable are shown line-by-line only, unless this is shown differently.

CAUTION: THE FOLLOWING MATERIAL DATA TABLE(S) ARE ORGANIZED BY ILLUSTRATED PARTS CATALOG. ALL PARTS IN THE TABLE(S) MAY OR MAY NOT BE APPLICABLE TO ALL THE ENGINE MODELS SHOWN IN THE TABLE HEADING. YOU MUST REFER TO THE APPROPRIATE ILLUSTRATED PARTS CATALOG FOR ENGINE MODEL APPLICABILITY USING THE OLD PART NUMBER (PN) AND CATALOG SEQUENCE NUMBER. FAILURE TO INSTALL THE PART(S) IN THE CORRECT ENGINE MODEL MAY RESULT IN A CONFIGURATION THAT IS NOT FAA APPROVED.

The material data that follows is for each engine.

For PW4164, PW4164-1D, PW4168, PW4168-1D, PW4168A, PW4168A-1D, PW4170 Engines:

New PN	Qty	Estimate of Unit Price ($)	Keyword	Old PN	Instructions — Disposition
50N526-01	22	2936.00	RING SEGMENT — ASSY OF, AIR SEALING, LPT, 4STG	50N463-01 (72-53-00-5-50)	(2)(A)(N)
			OR		
	22	2936.00	RING SEGMENT — ASSY OF, AIR SEALING, LPT, 4STG	50N526-01 (72-53-00-5-50 A)	(C)

Modification and Spares Information

Estimated part prices are provided when they are available at time of publication. The Estimate of Unit Price is only for planning purposes and does not constitute a firm quotation. An asterisk (*) is shown where part pricing information was unavailable. In either case, contact Pratt & Whitney Spares Management & Logistics for firm quotations.

UTC/P&W PROPRIETARY INFORMATION
Not subject to the EAR per 15 C.F.R. Chapter 1, Part 734.3(b)(3).

Parts Modification Conditions

(2) The new part is a replacement part only, and cannot be obtained by modification of the old part.

Spare Parts Availability

(A) The new part is available.

(C) The old part will continue to be supplied.

(N) The old part is not available.

Vendor Services or Special Components/Materials

Not Applicable.

Material Data for Each Spare Engine

The material for each spare engine is as stated in the preceding material information section.

Reidentified Parts

Not Applicable.

Necessary Tools

No more Support Equipment is necessary.

Other Material Information Data

Not Applicable.

UTC/P&W PROPRIETARY INFORMATION
Not subject to the EAR per 15 C.F.R. Chapter 1, Part 734.3(b)(3).

Accomplishment Instructions

1. Replace the twenty-two (22) LPT 4th Stage Air Sealing Ring Segment Assemblies, PN 50N526-01 or PN 50N463-01, with new LPT 4th Stage Air Sealing Ring Segment Assemblies, PN 50N526-01. See Figure 1.

   NOTE: The LPT 4th stage air sealing ring segment assemblies are the same for the PW4000-94 and PW4000-100 engine models. You cannot use LPT 4th stage air sealing ring segment assemblies again in PW4000-94 or PW4000-100 engine models after you remove them.

2. Do a dimensional inspection of the LPT case for bulging by Method A or Method B. You must complete Method A or Method B as follows. See Figure 2.

   A. Method A — Do a dimensional inspection of the LPT 4th stage vane drop dimension as follows. Refer to Reference 4, CIR Manual, Chapter/Section 72-53-17, Check-04.

      (1) Position the PWA 85690 Gage into the LPT 4th stage vane retaining rail. Apply light hand pressure rearward to seat the Gage.

      (2) Put the parallel bar across the LPT case front flange.

      (3) Make a measurement at forty-four (44) equally spaced locations. You must make an analysis of each location individually. It is not permitted to use averages.

      (4) If one or more of the measurements from Step 2.A.3 is not in the limits specified by table 802, Index 2, do a check of the measurements for Index 20 and 27 specified in Table 1. Refer to Reference 4, CIR Manual, Chapter/Section 72-53-17, Check-04.

      (5) If Index 20 and 27 is not in the serviceable limits, you must repair the LPT case by the repair specified in Table 1.

   B. Method B — Do a dimensional inspection of Index 20 and Index 27. If the results are not within the permitted limits, you must repair the LPT case as specified. See Table 1.

UTC/P&W PROPRIETARY INFORMATION
Not subject to the EAR per 15 C.F.R. Chapter 1, Part 734.3(b)(3).

TABLE 1: SERVICEABLE LIMITS AND REPAIR

Examine	Serviceable Limits	Repairable Limits	Repair
20	0.870 inch (22.098 mm) maximum measured at forty-four (44) positions of equal distance. Each location must be evaluated individually. Averaging is not permissible.	0.898 inch (22.809 mm) maximum.	-20, -48, -60, -79
27	0.040 inch (1.016 mm) maximum measured at fourty-four (44) positions of equal distance. Each location must be evaluated individually. Averaging is not permissible.		-79

UTC/P&W PROPRIETARY INFORMATION
Not subject to the EAR per 15 C.F.R. Chapter 1, Part 734.3(b)(3).

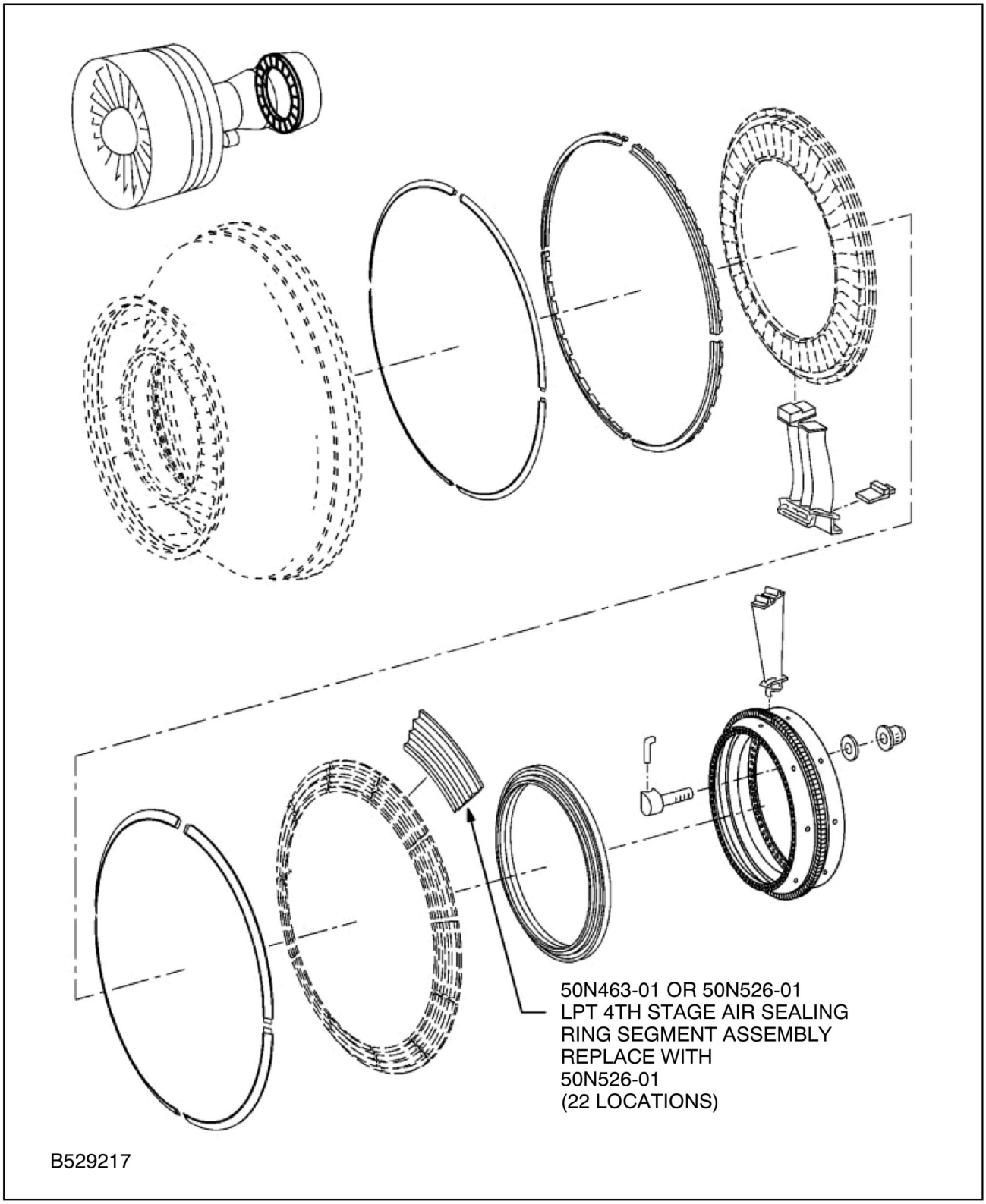

LOCATION OF THE LPT 4TH STAGE AIR SEALING RING SEGMENT ASSEMBLY
72-53-00
FIGURE 1

UTC/P&W PROPRIETARY INFORMATION
Not subject to the EAR per 15 C.F.R. Chapter 1, Part 734.3(b)(3).

THIS PAGE IS EMPTY

UTC/P&W PROPRIETARY INFORMATION
Not subject to the EAR per 15 C.F.R. Chapter 1, Part 734.3(b)(3).

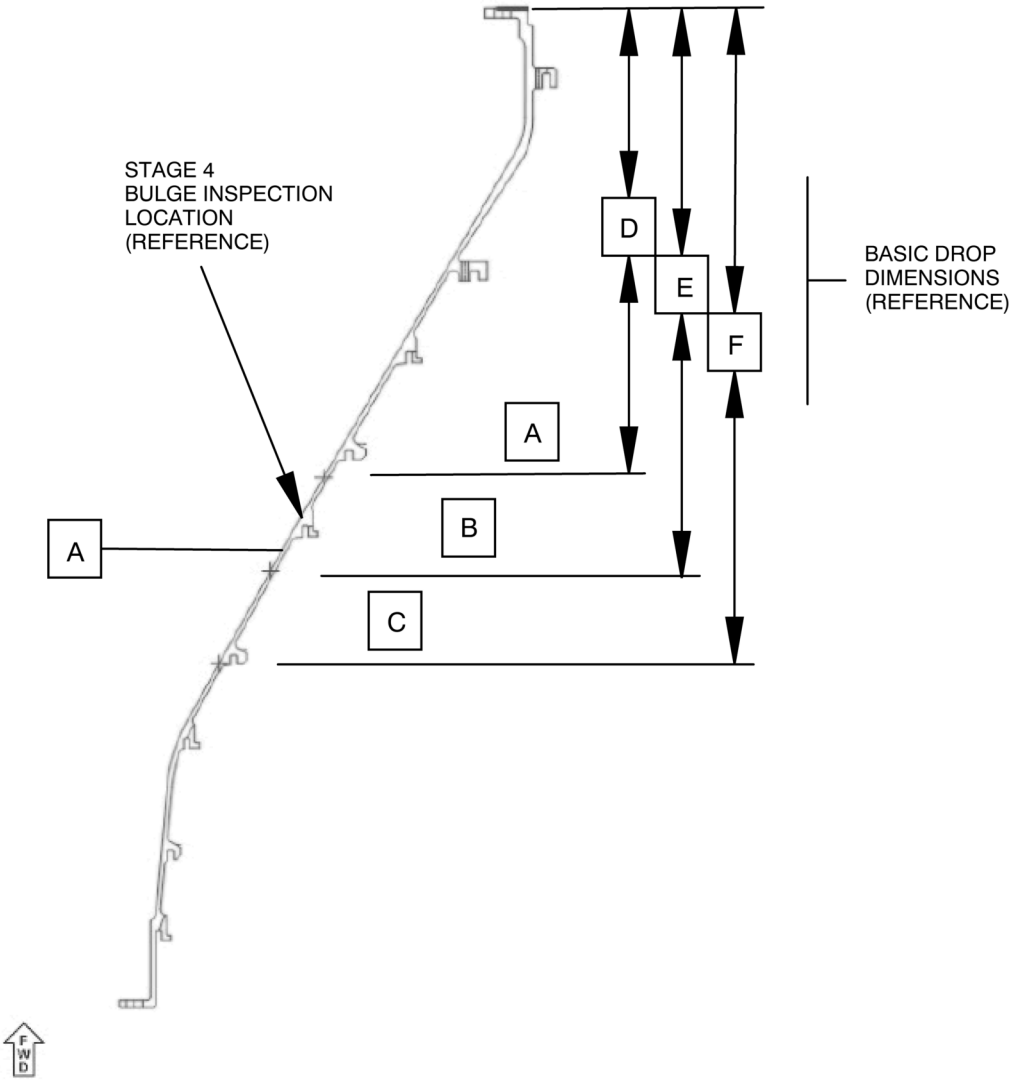

DIMENSIONAL INSPECTION OF THE LPT CASE FOR BULGING
FIGURE 2, SHEET 1

UTC/P&W PROPRIETARY INFORMATION
Not subject to the EAR per 15 C.F.R. Chapter 1, Part 734.3(b)(3).

1. A = R 24.382 INCH (619.303 MM) NOM. REF. TO CASE OUTER WALL
2. B = R 25.522 INCH (648.259 MM) NOM. REF. TO CASE OUTER WALL
3. C = R 26.632 INCH (676.453 MM) NOM. REF. TO CASE OUTER WALL
4. INDEX 27 IS CALCULATED FROM THE ACTUAL MEASURED VALUES OF A, B, AND C BY THE FORMULA: 27 = B - A - ((C - A) / 2)
5. D = 10.10 INCH (256.54 MM) NOM. REF. TO FRONT FLANGE FRONT FACE
6. E = 12.10 INCH (307.34 MM) NOM. REF. TO FRONT FLANGE FRONT FACE
7. F = 14.10 INCH (358.14 MM) NOM. REF. TO FRONT FLANGE FRONT FACE

KEY TO FIGURE 2, SHEET 1

UTC/P&W PROPRIETARY INFORMATION
Not subject to the EAR per 15 C.F.R. Chapter 1, Part 734.3(b)(3).

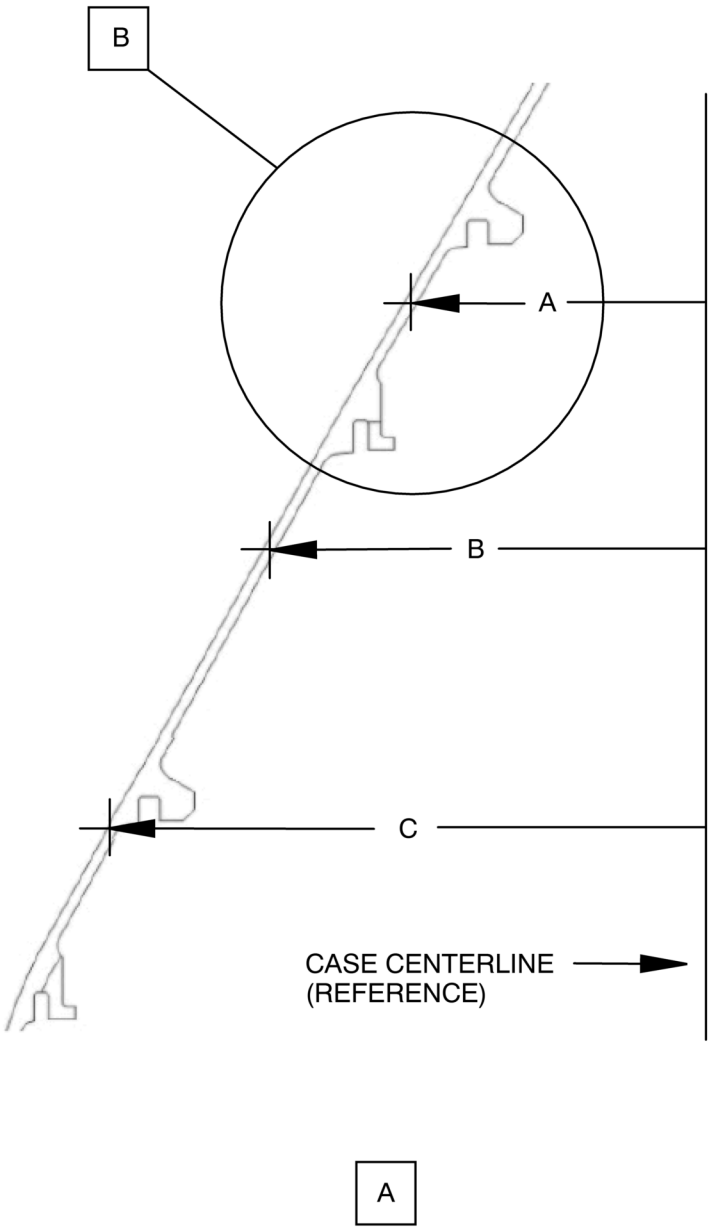

DIMENSIONAL INSPECTION OF THE LPT CASE FOR BULGING
FIGURE 2, SHEET 2

UTC/P&W PROPRIETARY INFORMATION
Not subject to the EAR per 15 C.F.R. Chapter 1, Part 734.3(b)(3).

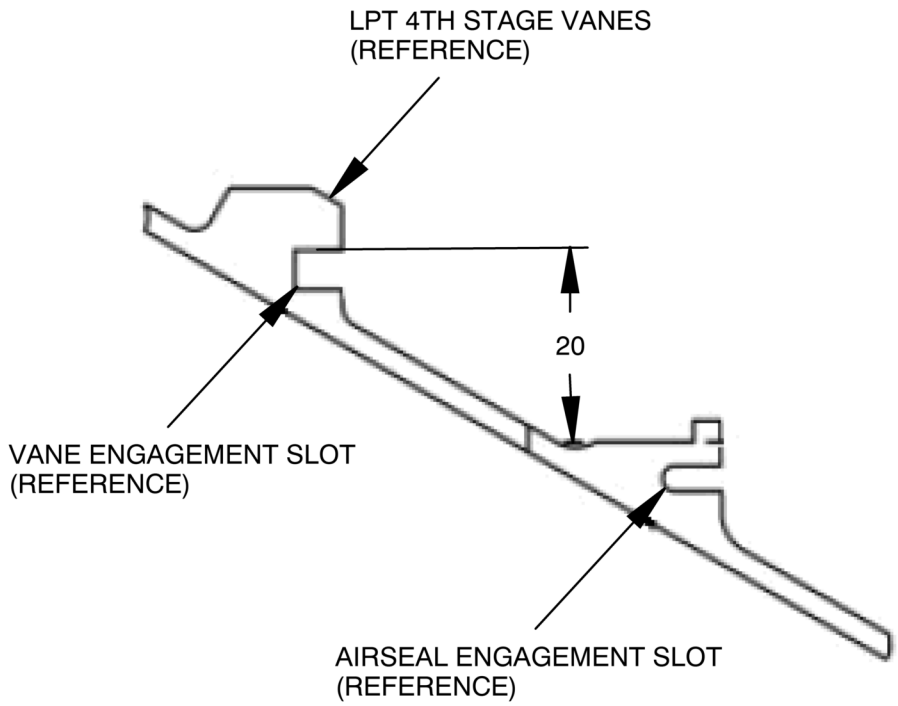

B

B529224

DIMENSIONAL INSPECTION OF THE LPT CASE FOR BULGING
FIGURE 2, SHEET 3

UTC/P&W PROPRIETARY INFORMATION
Not subject to the EAR per 15 C.F.R. Chapter 1, Part 734.3(b)(3).

Appendix

Parts Progression To Show the Changed Part in Relation to Other Parts

UTC/P&W PROPRIETARY INFORMATION
Not subject to the EAR per 15 C.F.R. Chapter 1, Part 734.3(b)(3).

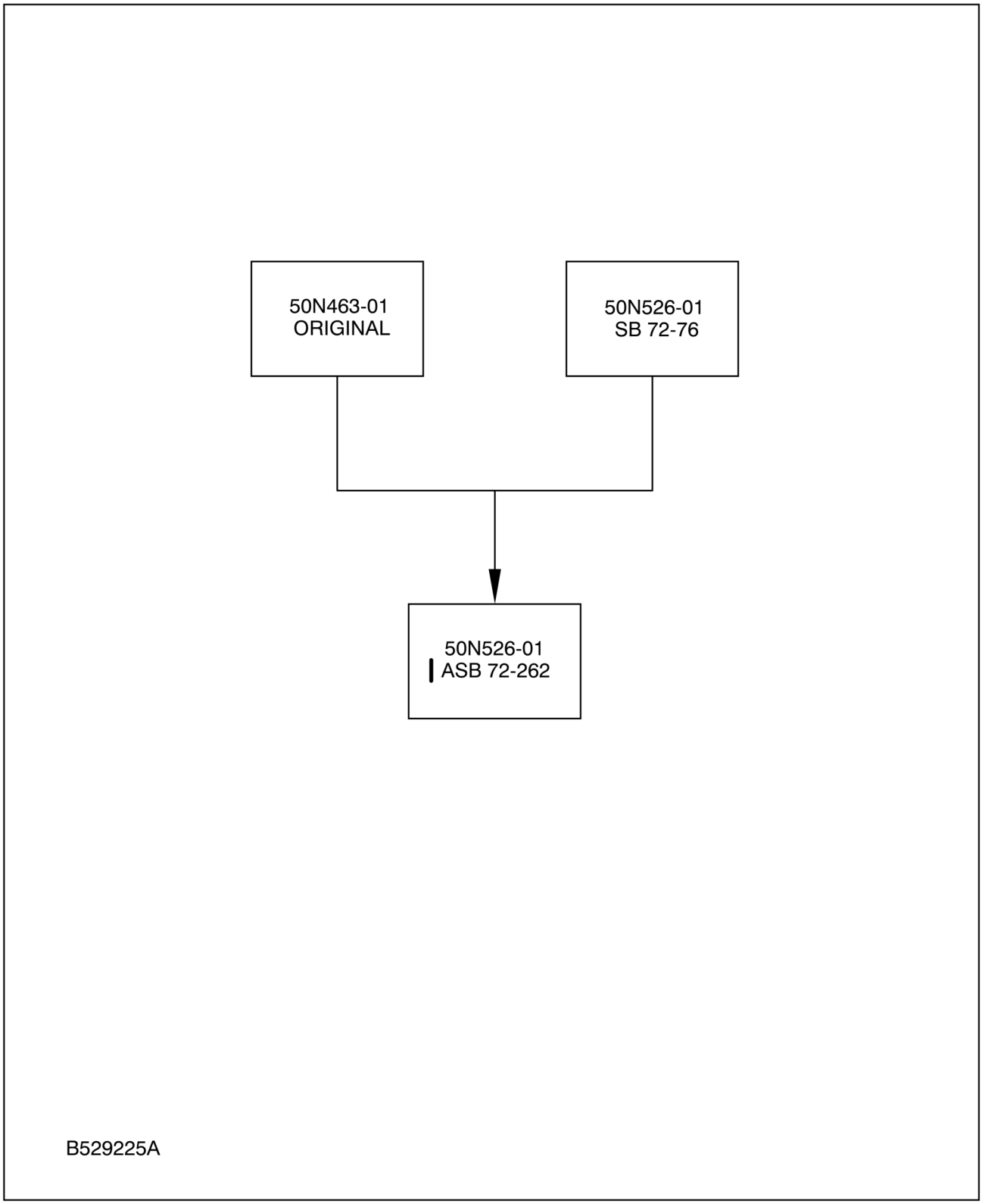

LPT 4TH STAGE AIR SEALING RING SEGMENT ASSEMBLY
FIGURE 3

UTC/P&W PROPRIETARY INFORMATION
Not subject to the EAR per 15 C.F.R. Chapter 1, Part 734.3(b)(3).

Added Data

Internal Reference Information

Revision No.	Reference Document	Origination
Original	EA19KC582	RDG/AJS
1	EA19KC582	RG/TAF

Number values shown in parentheses adjacent to U.S. values are International System of units (SI) equivalents.

UTC/P&W PROPRIETARY INFORMATION
Not subject to the EAR per 15 C.F.R. Chapter 1, Part 734.3(b)(3).