Commercial Airplanes

767 Requirements Bulletin

ALERT

Number: **767-27A0243 RB**
Original Issue: May 28, 2021
ATA System: 2740 2741

SUBJECT: FLIGHT CONTROLS - Horizontal Stabilizer - Fuselage Drain Holes Addition and Inspection.

Export of this technology is controlled under the United States Export Administration Regulations (EAR) (15 CFR 300-774). An export license may be required before it is used for development, production or use by foreign persons from specific countries. The controller of this data has the individual responsibility to abide by all export laws.

ECCN: 9E991

Copyright © 2021 Boeing.
Unpublished Work. All Rights Reserved.

Treatment of this document and its content is governed by contract with Boeing. Rights to use this document are licensed on a per aircraft basis and such rights may not be transferable. For more information, contact The Boeing Company.

Boeing, the Boeing signature, the Boeing symbol, 707, 717, 727, 737, 747, 757, 767, 777, 787, Dreamliner, BBJ, DC-8, DC-9, DC-10, KC-10, KC-46, KDC-10, MD-10, MD-11, MD-80, MD-88, MD-90, P-8, Poseidon and Boeing liveries are all trademarks owned by The Boeing Company; and no trademark license is granted in connection with this document unless provided in writing by Boeing.

BLANK PAGE

Export Controlled ECCN: 9E991
Copyright © Unpublished
Work - See page 1 for details.

Table of Contents

1. EFFECTIVITY 5
A. Airplanes 5
B. Spares Affected 7
2. CONCURRENT REQUIREMENTS 7
3. COMPLIANCE 8
4. APPROVAL 9
5. ACCOMPLISHMENT INSTRUCTIONS 11
A. General Information 11
B. Work Instructions 12
FIGURE 1: DRAIN HOLES DRILLING AND DRAIN FITTINGS INSTALLATION 15
FIGURE 2: DRAIN HOLE BLOCKAGE INSPECTION 21

Export Controlled ECCN: 9E991
Copyright © Unpublished
Work - See page 1 for details.

BLANK PAGE

Export Controlled ECCN: 9E991
Copyright © Unpublished
Work - See page 1 for details.

ALERT

Number: **767-27A0243 RB**
Original Issue: May 28, 2021
ATA System: 2740 2741

SUBJECT: FLIGHT CONTROLS - Horizontal Stabilizer - Fuselage Drain Holes Addition and Inspection.

THIS DOCUMENT IS SENT TO THE OPERATORS OF RECORD OF THE AIRPLANES SHOWN IN PARAGRAPH 1.A., EFFECTIVITY. IF AN AIRPLANE HAS BEEN LEASED OR SOLD, SEND THIS DOCUMENT TO THE NEW OPERATOR. IF APPLICABLE SPARES HAVE BEEN SOLD, SEND THIS DOCUMENT TO THE NEW OWNER. THIS IS AN ENHANCED REQUIRED FOR COMPLIANCE DOCUMENT. THE BOEING PROCESSES USED TO CREATE THE SERVICE BULLETIN (SB) AND THE REQUIREMENTS BULLETIN (RB) ENSURE THAT THE INFORMATION BETWEEN "RC START" AND "RC END" IN THE SB ARE IDENTICAL TO THE INFORMATION IN THE SAME SECTIONS (COMPLIANCE, WORK INSTRUCTIONS…) OF THE RB WHICH THE SB REFERS TO AS THE RELATED DOCUMENT.

1. Effectivity

A. Airplanes
This bulletin is applicable to 767-200, 767-300, 767-300F, 767-400ER Airplane(s), line number(s) 2-717, 719-922, 924-1064, 1068, 1070-1090, 1093-1097, 1099, 1101, 1103, 1105-1106, 1108, 1110, 1112, 1115, 1118, 1121, 1123, 1125, 1127, 1130, 1133, 1136, 1138, 1140-1142, 1144, 1146, 1148, 1150, 1152-1153, 1155, 1157, 1159, 1161, 1163, 1165, 1167, 1169, 1171, 1173, 1175, 1177, 1179-1180, 1182-1183, 1185-1187, 1189-1191, 1193-1195, 1197-1199, 1201, 1203-1204, 1206, 1208-1209, 1211-1212, 1214-1215, 1217-1218, 1220-1222, 1224-1225, 1227-1229, 1231-1233 in 1 Group(s). Where the effectivity is presented with hyphens between line numbers, the airplane applicability means "through" and "inclusive", e.g. line numbers 1-9 means line numbers 1 through 9 inclusive.

The Variable Numbers and Group Information for the applicable airplanes is given below.

GROUP	CONFIGURATION	DESCRIPTION
1	-	767-200/-300/-300F/-400ER passenger and freighter airplanes

Airplane Models:

767-200, 767-300, 767-300F, 767-400ER

Variable Number	Group
VA002 - VA020	1

Variable Number	Group
VA301 - VA315	1

Variable Number	Group
VA501 - VA530	1

Export Controlled ECCN: 9E991
Copyright © Unpublished
Work - See page 1 for details.

ALERT **ALERT**

Variable Number	Group
VA701 - VA719	1
VA801 - VA810	1
VB001 - VB002	1
VB051 - VB055	1
VB101 - VB125	1
VB201 - VB202	1
VB251 - VB253	1
VB281 - VB284	1
VB301 - VB302	1
VB321 - VB332	1
VB371 - VB373	1
VB401	1
VB441 - VB444	1
VE001 - VE003	1
VE021 - VE023	1
VE041 - VE043	1
VE061 - VE069	1
VE083 - VE086	1
VE101 - VE104	1
VE116 - VE118	1
VE121 - VE126	1
VE141 - VE152	1
VE171 - VE172	1
VF001 - VF002	1
VF041 - VF042	1
VF051	1
VF061 - VF062	1
VF071 - VF072	1
VF091 - VF093	1
VF101 - VF102	1
VF161 - VF162	1
VF171 - VF172	1
VF180 - VF184	1

Variable Number	Group
VF251	1
VK001 - VK016	1
VK021 - VK022	1
VK031 - VK056	1
VK081 - VK113	1
VK131 - VK133	1
VK141 - VK148	1
VK161 - VK164	1
VK171	1
VK181	1
VK186	1
VL001 - VL006	1
VL011	1
VL701 - VL703	1
VL751 - VL755	1
VL806 - VL807	1
VL871 - VL873	1
VL891 - VL900	1
VL911 - VL914	1
VL931 - VL932	1
VL941	1
VN001 - VN041	1
VN051 - VN064	1
VN081 - VN099	1
VN111 - VN127	1
VN130 - VN137	1
VN151 - VN158	1
VN163 - VN168	1
VN171 - VN174	1
VN191 - VN198	1
VN211 - VN212	1
VN221 - VN225	1
VN231 - VN234	1

Variable Number	Group
VN241 - VN243	1
VN251 - VN276	1
VN291 - VN293	1
VN301 - VN314	1
VN371 - VN372	1
VN376	1
VN381 - VN388	1
VN421 - VN427	1
VN436	1
VN471 - VN472	1
VN491 - VN513	1
VN531 - VN532	1
VN536 - VN537	1
VN541 - VN542	1
VN546 - VN547	1
VN551	1
VN556 - VN557	1
VN561 - VN562	1
VN631 - VN638	1
VN651 - VN658	1
VN671 - VN672	1
VN676	1
VN681 - VN691	1
VN731 - VN732	1
VN751 - VN753	1
VN791 - VN792	1
VN811 - VN813	1
VN921 - VN922	1
VN931 - VN936	1
VN951 - VN953	1
VN966 - VN972	1
VQ001 - VQ021	1
VQ071 - VQ086	1

Export Controlled ECCN: 9E991
Copyright © Unpublished
Work - See page 1 for details.

ALERT ALERT

Variable Number	Group
VQ111	1
VR051 - VR060	1
VR081	1
VR084	1
VR086 - VR089	1
VR106 - VR109	1
VR201 - VR211	1
VR251	1
VR256 - VR260	1
VR266 - VR303	1
VR401	1
VR421 - VR423	1
VR426	1
VR441	1
VR461	1
VR471 - VR472	1
VS051 - VS056	1
VS061	1
VS066 - VS070	1
VS073 - VS078	1
VS091 - VS104	1
VS111 - VS113	1
VS131 - VS133	1
VS136 - VS137	1
VS176 - VS177	1
VS186 - VS187	1
VS196 - VS203	1

Variable Number	Group
VS206 - VS208	1
VS211	1
VS216 - VS217	1
VS231	1
VS246 - VS248	1
VS261 - VS263	1
VS266 - VS274	1
VS291 - VS293	1
VS301 - VS303	1
VS306 - VS311	1
VS316	1
VS321 - VS324	1
VS331 - VS333	1
VS336 - VS337	1
VS366 - VS367	1
VS381 - VS382	1
VS391 - VS392	1
VS401	1
VS426 - VS428	1
VS466 - VS472	1
VS486	1
VS496 - VS497	1
VS506 - VS507	1
VS526	1
VS546 - VS549	1
VS701 - VS736	1
VS751 - VS759	1

Variable Number	Group
VS821 - VS825	1
VS841 - VS844	1
VS861	1
VS881 - VS883	1
VS891	1
VS896	1
VS901 - VS912	1
VS916	1
VS921 - VS928	1
VS931 - VS933	1
VS941	1
VS951 - VS954	1
VS961 - VS969	1
VS971 - VS977	1
VS981 - VS984	1
VT001 - VT013	1
VT021	1
VT031 - VT033	1
VT501	1
VT511 - VT513	1
VT521 - VT523	1
VT531 - VT533	1
VT541 - VT546	1
VT551 - VT552	1
VT556 - VT652	1
VW701 - VW721	1
VW851	1

B. Spares Affected
None.

2. CONCURRENT REQUIREMENTS

The service bulletin listed below must be done before or at the same time as this bulletin:

Export Controlled ECCN: 9E991
Copyright © Unpublished
Work - See page 1 for details.

Company	Service Bulletin	Description
Boeing	767-27A0240 RB Original Issue or later approved revisions	Drain Holes, Limit Switch and Position Transmitter Modules Inspection, and Repair

3. COMPLIANCE

The Federal Aviation Administration (FAA) will possibly release an Airworthiness Directive related to Requirements Bulletin 767-27A0243 RB. The Airworthiness Directive will make the compliance tasks and times given in Requirements Bulletin 767-27A0243 RB mandatory.

Accomplish the required action(s), based on the applicable condition(s) in Table(s) 1 through 2, in accordance with Accomplishment Instructions.

The inspections and times given in Table 2 of this bulletin supersede the repetitive Drain Hole inspections at the times specified in Boeing Requirements Bulletin 767-27A0240 RB.

When more than one OPTION is given for a CONDITION, do only one of the OPTION numbers. When more than one ACTION is given for a CONDITION or an OPTION, do all of the ACTION numbers for that CONDITION or OPTION.

Table 1: ADDITION OF NEW DRAIN HOLES

Condition	Action	Compliance Time (Whichever Occurs Later)		Repeat Interval (Not to Exceed)
All Airplanes	ACTION 1: Do all applicable actions in accordance with the Accomplishment Instructions of the Requirements Bulletin specified in CONCURRENT REQUIREMENTS.	Within 24 months after the date of issuance of the original standard certificate of airworthiness or the original export certificate of airworthiness.	Within 24 months after the Original Issue date of the Requirements Bulletin 767-27A0243 RB.	-
	ACTION 2: Drill two drain holes and install fittings adjacent to the existing drain holes aft of body STA 1725.5.			

Table 2: DRAIN HOLE INSPECTION

Condition	Action	Compliance Time	Repeat Interval (Not to Exceed)
All Airplanes (a)	Do a General Visual Inspection (GVI) of the five drain holes for blockage.	Within 24 months after drain hole and fitting installation modification.	-

Export Controlled ECCN: 9E991
Copyright © Unpublished
Work - See page 1 for details.

Table 2: DRAIN HOLE INSPECTION

Condition	Action	Compliance Time	Repeat Interval (Not to Exceed)
CONDITION 1: NO BLOCKAGE FOUND	CONDITION 1 (ACTION 1): Clean each drain hole.	Before further flight.	-
	CONDITION 1 (ACTION 2): Repeat the GVI of the five drain holes for blockage.	-	24 months.
CONDITION 2: ANY BLOCKAGE FOUND	CONDITION 2 (ACTION 1): Clear the affected drain hole blockage.	Before further flight.	-
	CONDITION 2 (ACTION 2): Clean each drain hole.	Before further flight.	-
	CONDITION 2 (ACTION 3): Repeat the GVI of the five drain holes for blockage.	-	24 months.
(a) The inspections and times given in this table supersede the repetitive Drain Hole inspections at the times specified in Boeing Requirements Bulletin 767-27A0240 RB.			

4. APPROVAL

This Requirements Bulletin was examined by the Federal Aviation Administration (FAA). The changes specified in this document comply with the applicable regulations and are FAA approved, as well as European Union Aviation Safety Agency (EASA)/Joint Aviation Authorities (JAA) approved for all EASA/JAA approved airplanes listed in this Requirements Bulletin effectivity. This document and its approval were based on the airplane in its original Boeing delivery configuration or as modified by other Boeing changes.

If an airplane has a non-Boeing modification or repair that affects a component or system also affected by this Requirements Bulletin, the operator is responsible for obtaining appropriate regulatory agency approval before incorporating this Requirements Bulletin.

Export Controlled ECCN: 9E991
Copyright © Unpublished
Work - See page 1 for details.

BLANK PAGE

Export Controlled ECCN: 9E991
Copyright © Unpublished
Work - See page 1 for details.

5. ACCOMPLISHMENT INSTRUCTIONS

A. GENERAL INFORMATION

NOTE: 1. This is an Enhanced Required for Compliance document. There will be a separate Service Bulletin (SB) and a separate Requirements Bulletin (RB). If an RB is mandated by an Airworthiness Directive (AD), then all applicable requirements specified in the RB must be done. For the related SB, some locations are marked RC Start and RC End to identify the requirements that are restated from the RB. For the related SB, the areas between RC Start and RC End, including sub-steps and any figures identified between RC Start and RC End, must be done to comply with the AD. Therefore, an Alternative Method of Compliance (AMOC) is required for any deviations to steps between RC Start and RC End, including substeps and identified figures. For the related SB, the steps not between RC Start and RC End may be deviated from using accepted methods in accordance with the operator's maintenance or inspection program without obtaining approval of an AMOC; this is provided that the steps between RC Start and RC End, including sub-steps and identified figures, can still be done as specified, and the airplane can be put back in an airworthy condition. Figures not required for compliance are omitted from the RB.

2. This is an Enhanced Required for Compliance document. The Boeing processes used to create the Service Bulletin (SB) and the Requirements Bulletin (RB) ensure that the information between "RC Start" and "RC End" in the SB are identical to the information in the same sections (Compliance, Work Instructions...) of the RB which the SB refers to as the related document.

3. The compliance times for the actions in WORK INSTRUCTIONS are in Compliance.

4. Unless shown differently, these dimensions and tolerances are used:

- Linear dimensions are in inches
- Tolerance on linear dimensions, other than rivet and bolt edge margins, is plus or minus 0.03 inch
- Tolerance on rivet and bolt edge margin is plus or minus 0.05 inch
- Angular tolerance is plus or minus 2 degrees
- Hole dimensions for standard solid rivets and fasteners are in Structural Repair Manual (SRM) Chapter 51
- Torque Values:
  - Values for structural fasteners are given in 767 Structural Repair Manual, Chapter 51.
  - Values for airframe maintenance tasks are included in Chapter 20 of 767 Aircraft Maintenance Manual (AMM).
  - Values for electrical maintenance tasks are included in Chapter 20 of Standard Wiring Practices Manual (SWPM).
  - Values for engine maintenance tasks are included in Chapter 70 of 767 Aircraft Maintenance Manual (AMM).
  - Non-standard torque values for maintenance tasks are included in the applicable installation step.

Export Controlled ECCN: 9E991
Copyright © Unpublished
Work - See page 1 for details.

5. These work instructions refer to procedures included in other Boeing documents. When the words "refer to" are used and the operator has an accepted alternative procedure, the accepted alternative procedure can be used. When the words "in accordance with" are included in the instruction, the procedure in the Boeing document must be used.

6. Where the work instructions include installation of a kept part, a new or serviceable part with the same part number can be installed as an alternative to the kept part.

7. If it is necessary to remove more parts for access, you can remove those parts. If you can get access without removing identified parts, it is not necessary to remove all of the identified parts. Jacking and shoring limitations must be observed.

8. Use the approved fastener, process and material substitutions in accordance with SRM Chapter 51.

9. A General Visual Inspection is defined as: A visual examination of an interior or exterior area, installation or assembly to detect obvious damage, failure or irregularity. This level of inspection is made from within touching distance, unless otherwise specified. A mirror may be necessary to enhance visual access to all exposed surfaces in the inspection area. This level of inspection is made under normally available lighting conditions such as daylight, hangar lighting, flashlight or drop-light and may require removal or opening of access panels or doors. Stands, ladders or platforms may be required to gain proximity to the area being checked. Basic cleaning may be required to ensure appropriate visibility.

10. When more than one OPTION is given for a CONDITION, do only one of the OPTION numbers. When more than one ACTION is given for a CONDITION or an OPTION, do all of the ACTION numbers for that CONDITION or OPTION.

11. The instructions in Work Instructions and the figures can include operation of tools or test equipment. Boeing Engineering Tool Drawings, the Illustrated Tool and Equipment Manual, and the Special Tool and Ground Handling Drawing Index contain data on versions of the tools or test equipment that you can use. It is permitted to use replaced tools. It is not permitted to use superseded tools.

12. If the length of any fastener specified in this service bulletin does not meet installation standards given in SRM Chapter 51, then a fastener of the same specification, or an approved substitute, with a length which meets the installation standards given in SRM Chapter 51 may be used. In addition, washers may be installed for fastener grip length in accordance with SRM Chapter 51. Refer to SOPM 20-50-01 for alternate full threaded fasteners (screws) needed for installation in this service bulletin.

B. WORK INSTRUCTIONS

Actions Required for Compliance

1. Requirements

Export Controlled ECCN: 9E991
Copyright © Unpublished
Work - See page 1 for details.

Table 1: ADDITION OF NEW DRAIN HOLES

Condition	Action	Method of Compliance	Refer to the listed procedures in SB 767-27A0243 Original Issue or later approved revisions as an accepted procedure.
All Airplanes	ACTION 1: Do all applicable actions in accordance with the Accomplishment Instructions of the Requirements Bulletin specified in CONCURRENT REQUIREMENTS.	-	-
	ACTION 2: Drill two new drain holes and install fittings adjacent to the existing drain holes aft of body STA 1725.5.	-	PART 1: OPEN ACCESS
		FIGURE 1	-
		-	PART 4: CLOSE ACCESS

Table 2: DRAIN HOLE INSPECTION

Condition	Action	Method of Compliance	Refer to the listed procedures in SB 767-27A0243 Original Issue or later approved revisions as an accepted procedure.
All Airplanes (a)	Do a General Visual Inspection (GVI) of the five drain holes for blockage.	-	PART 1: OPEN ACCESS
		FIGURE 2	-
CONDITION 1: NO BLOCKAGE FOUND	CONDITION 1 (ACTION 1): Clean each drain hole.	-	PART 3: DRAIN HOLE CLEAN
		-	PART 4: CLOSE ACCESS
	CONDITION 1 (ACTION 2): Repeat the GVI of the five drain holes for blockage.	-	PART 1: OPEN ACCESS
		FIGURE 2	-

Export Controlled ECCN: 9E991
Copyright © Unpublished
Work - See page 1 for details.

Table 2: DRAIN HOLE INSPECTION

Condition	Action	Method of Compliance	Refer to the listed procedures in SB 767-27A0243 Original Issue or later approved revisions as an accepted procedure.
CONDITION 2: ANY BLOCKAGE FOUND	CONDITION 2 (ACTION 1): Clear the affected drain hole blockage.	-	PART 2: BLOCKAGE REMOVAL
	CONDITION 2 (ACTION 2): Clean each drain hole.	-	PART 3: DRAIN HOLE CLEAN
		-	PART 4: CLOSE ACCESS
	CONDITION 2 (ACTION 3): Repeat the GVI of the five drain holes for blockage.	-	PART 1: OPEN ACCESS
		FIGURE 2	-
(a) The inspections and times given in this table supersede the repetitive Drain Hole inspections at the times specified in Boeing Requirements Bulletin 767-27A0240 RB			

Export Controlled ECCN: 9E991
Copyright © Unpublished
Work - See page 1 for details.

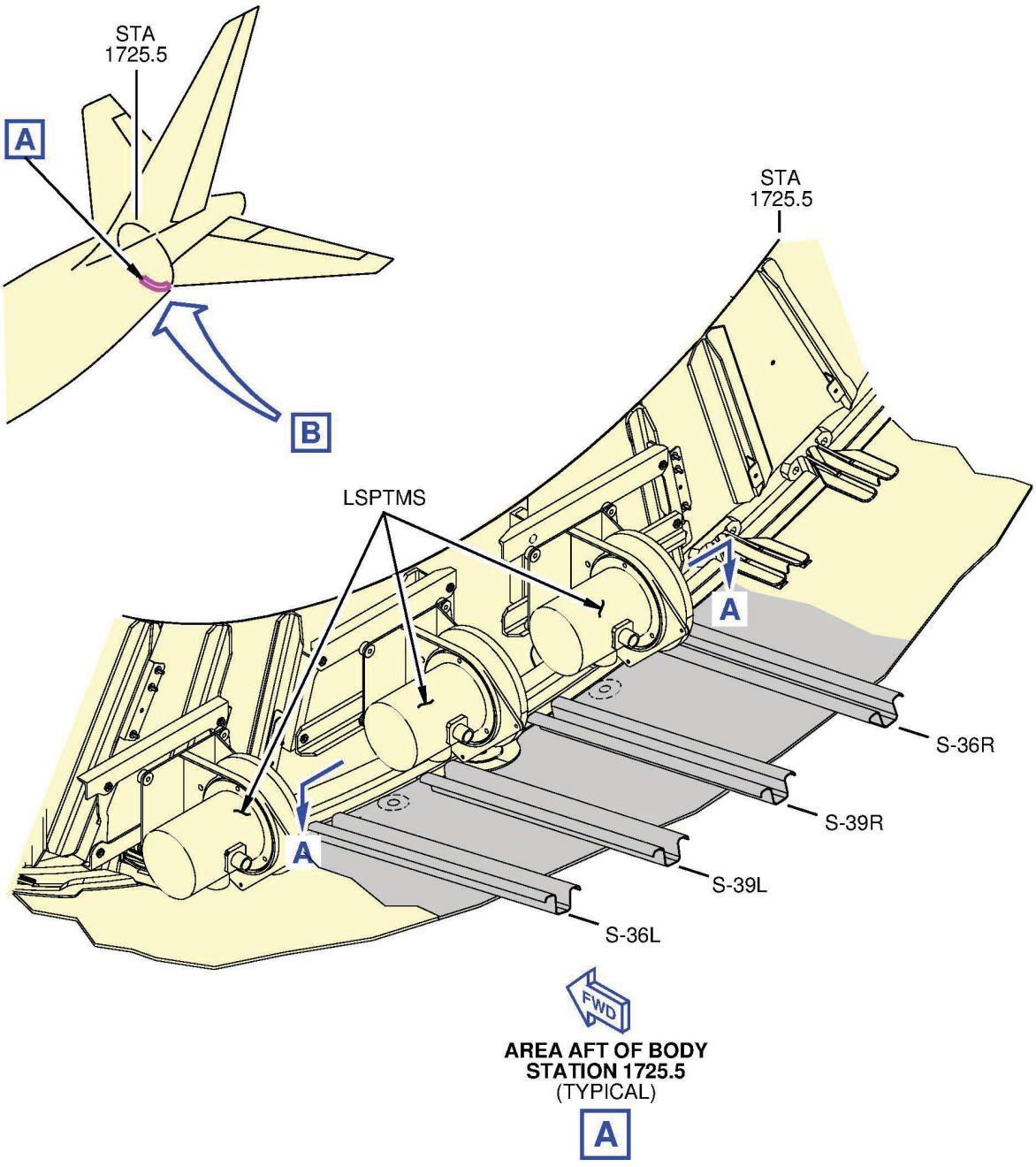

FIGURE 1: DRAIN HOLES DRILLING AND DRAIN FITTINGS INSTALLATION (SHEET 1 OF 6)

Export Controlled ECCN: 9E991
Copyright © Unpublished
Work - See page 1 for details.

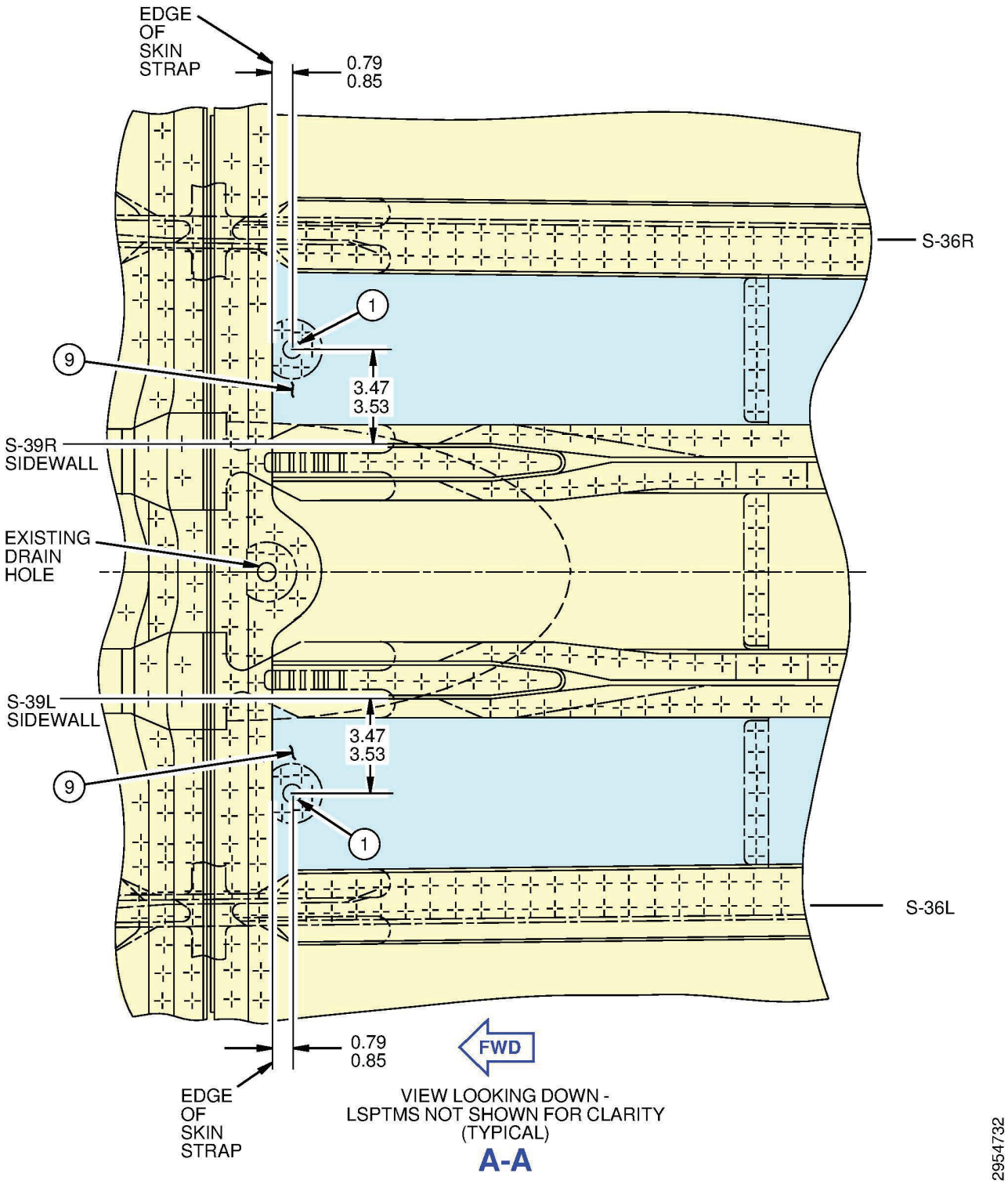

FIGURE 1: DRAIN HOLES DRILLING AND DRAIN FITTINGS INSTALLATION (SHEET 2 OF 6)

Export Controlled ECCN: 9E991
Copyright © Unpublished
Work - See page 1 for details.

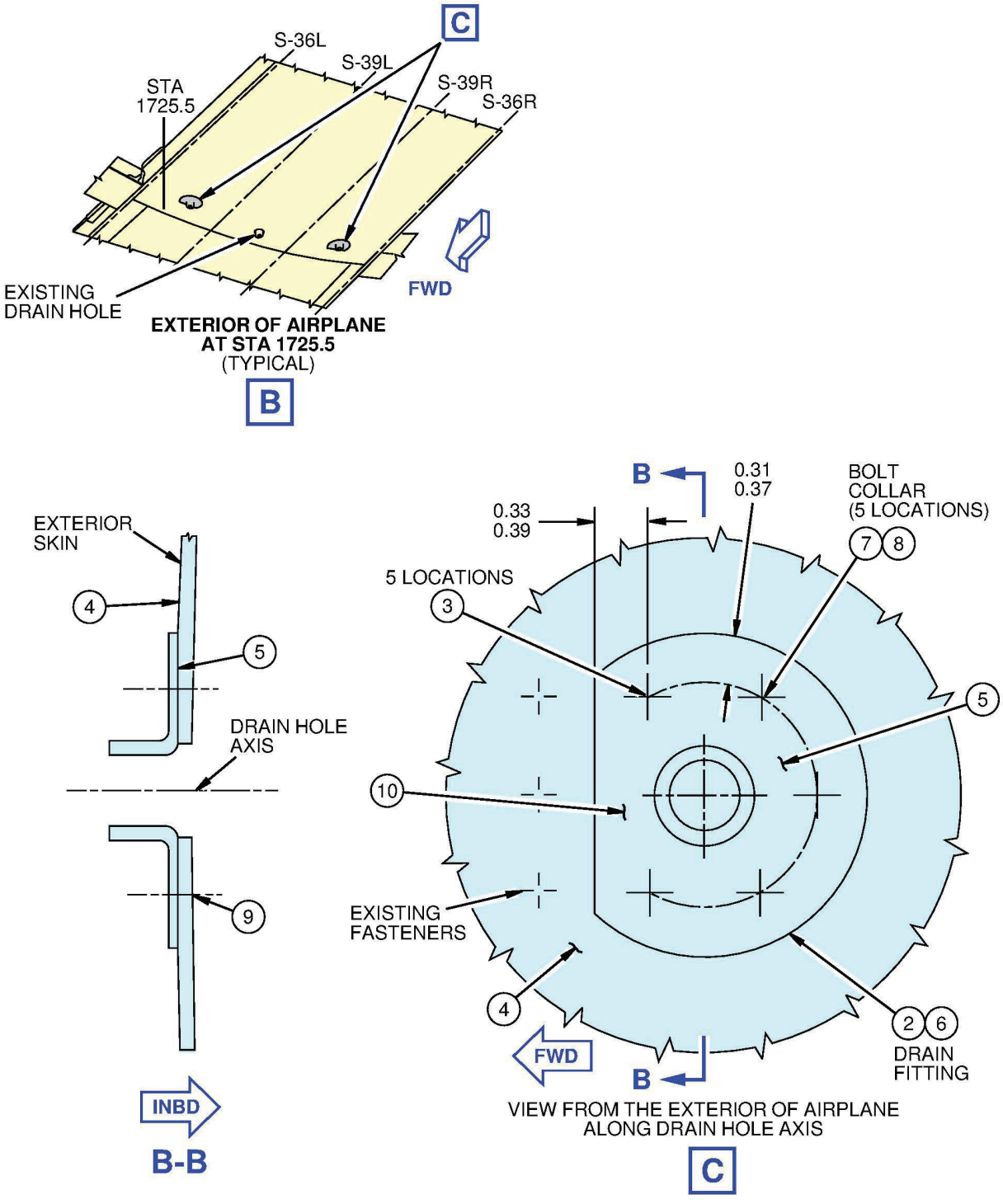

FIGURE 1: DRAIN HOLES DRILLING AND DRAIN FITTINGS INSTALLATION (SHEET 3 OF 6)

Export Controlled ECCN: 9E991
Copyright © Unpublished
Work - See page 1 for details.

ALERT **ALERT**

The step numbers shown below agree with the numbers shown in the circle symbols in the figure. The QTY numbers shown below are the number of parts necessary for this figure.

Step	Task	Name	Identification	Qty	More Data
CAUTION	CARE SHOULD BE TAKEN NOT TO DAMAGE LSPTMS DURING DRILLING OF DRAIN HOLES.				
1	Drill	DRAIN HOLE	-	2	0.600 to 0.620 inch diameter at the locations shown. (a)
	Deburr	DRAIN HOLE	-	2	Break sharp edges. Edges must have radius of 0.01 to 0.02 inch.
2	Put / Hold	DRAIN FITTING - UNPRESSURIZED	140T2817U7	2	Position each Drain Fitting over the new drain holes on the exterior of the airplane with the flat edge parallel to the existing row of fasteners as shown.
3	Drill	FASTENER HOLE	-	10	0.161 to 0.164 inch diameter through the drain fitting and skin at the locations shown.
	Countersink	FASTENER HOLE	-	10	100 degrees, on the outer surface of the drain fitting.
	Clean	FASTENER HOLE	-	10	Refer to SOPM 20-30-03 as an accepted procedure.
	Apply	CHEMICAL CONVERSION COATING	TYPE 2, CLASS A	-	On bare metal surface of the fastener holes. Refer to SOPM 20-43-03 as an accepted procedure.

FIGURE 1: DRAIN HOLES DRILLING AND DRAIN FITTINGS INSTALLATION (SHEET 4 OF 6)

Export Controlled ECCN: 9E991
Copyright © Unpublished
Work - See page 1 for details.

Step	Task	Name	Identification	Qty	More Data
4	Apply	CHEMICAL CONVERSION COATING	TYPE 2, CLASS A	-	Apply to the exterior skin in the area the drain fitting covers and extend 0.5 inches past. Refer to SOPM 20-43-03 as an accepted procedure. (b)
	Apply	PRIMER	BMS10-79, TYPE III	-	Apply two layers of primer to areas where chemical conversion coating was applied. Refer to SOPM 20-44-04 as an accepted procedure. (b)
5	Apply	SEALANT	BMS5-95 TYPE I, CLASS C	-	To the Drain Fitting and the exterior skin contact surfaces to make a fay seal. Refer to SOPM 20-50-19 as an accepted procedure.
6	Install (New)	DRAIN FITTING - UNPRESSURIZED	140T2817U7	2	Position each Drain Fitting over the new drain holes as shown.
7	Apply	SEALANT	BMS5-95 TYPE I, CLASS C	-	To wet install the fasteners. Refer to SOPM 20-50-19, Method 3, as an accepted procedure.
8	Install (New)	BOLT, 100 DEG HEX DR	BACB30YP5K3	10	Install with the head of the fasteners on the exterior of the airplane. (c)
	Install (New)	COLLAR, SHEAR	BACC30BL5	10	Collar is in the interior of the airplane. (c)

FIGURE 1: DRAIN HOLES DRILLING AND DRAIN FITTINGS INSTALLATION (SHEET 5 OF 6)

Export Controlled ECCN: 9E991
Copyright © Unpublished
Work - See page 1 for details.

Step	Task	Name	Identification	Qty	More Data
9	Apply	CORROSION INHIBITING COMPOUND	BMS3-23, TYPE II, CLASS 2	-	Apply corrosion inhibiting compound (CIC) to area behind drain fitting. Refer to SOPM 20-41-05 as an accepted procedure. (e)
10	Apply	EXTERIOR DECORATIVE PAINT	BMS10-72	-	(d)

(a) Hole surface must have 63 micro-inches Ra or better surface roughness.

(b) This step is only necessary if airplane exterior skin does not have primer/paint applied to its surface where it contacts the drain fitting.

(c) Refer to 767-200 SRM 51-40-02, 767-200SF SRM 51-40-02, 767-300 SRM 51-40-02, 767-300BCF SRM 51-40-02, 767-300F SRM 51-40-02 or 767-400 SRM 51-40-02 as an accepted procedure.

(d) Apply to the drain fittings to match the existing airplane color scheme. Refer to 767 AMM 51-21-10 as an accepted procedure. This step is optional and only necessary if paint is to be applied to the exterior skin.

(e) Prior to CIC application, apply conversion coating type 2 class A and two coats of BMS 10-11 type I primer to any bare surfaces. Refer to SOPM 20-43-03 as an accepted procedure for conversion coating application. Refer to SOPM 20-41-02 as an accepted procedure for primer application.

FIGURE 1: DRAIN HOLES DRILLING AND DRAIN FITTINGS INSTALLATION (SHEET 6 OF 6)

Export Controlled ECCN: 9E991
Copyright © Unpublished
Work - See page 1 for details.

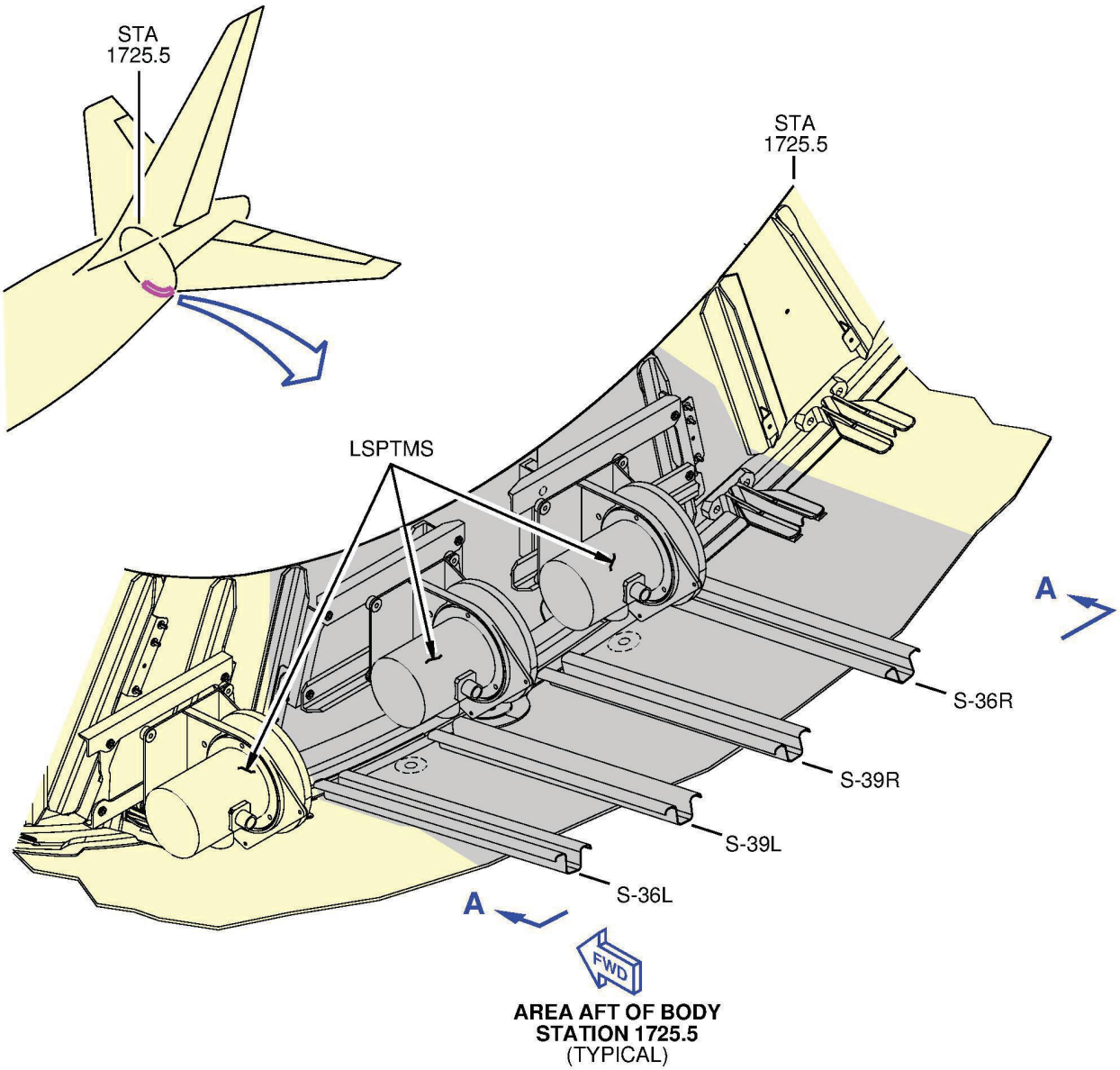

FIGURE 2: DRAIN HOLE BLOCKAGE INSPECTION
(SHEET 1 OF 3)

Export Controlled ECCN: 9E991
Copyright © Unpublished
Work - See page 1 for details.

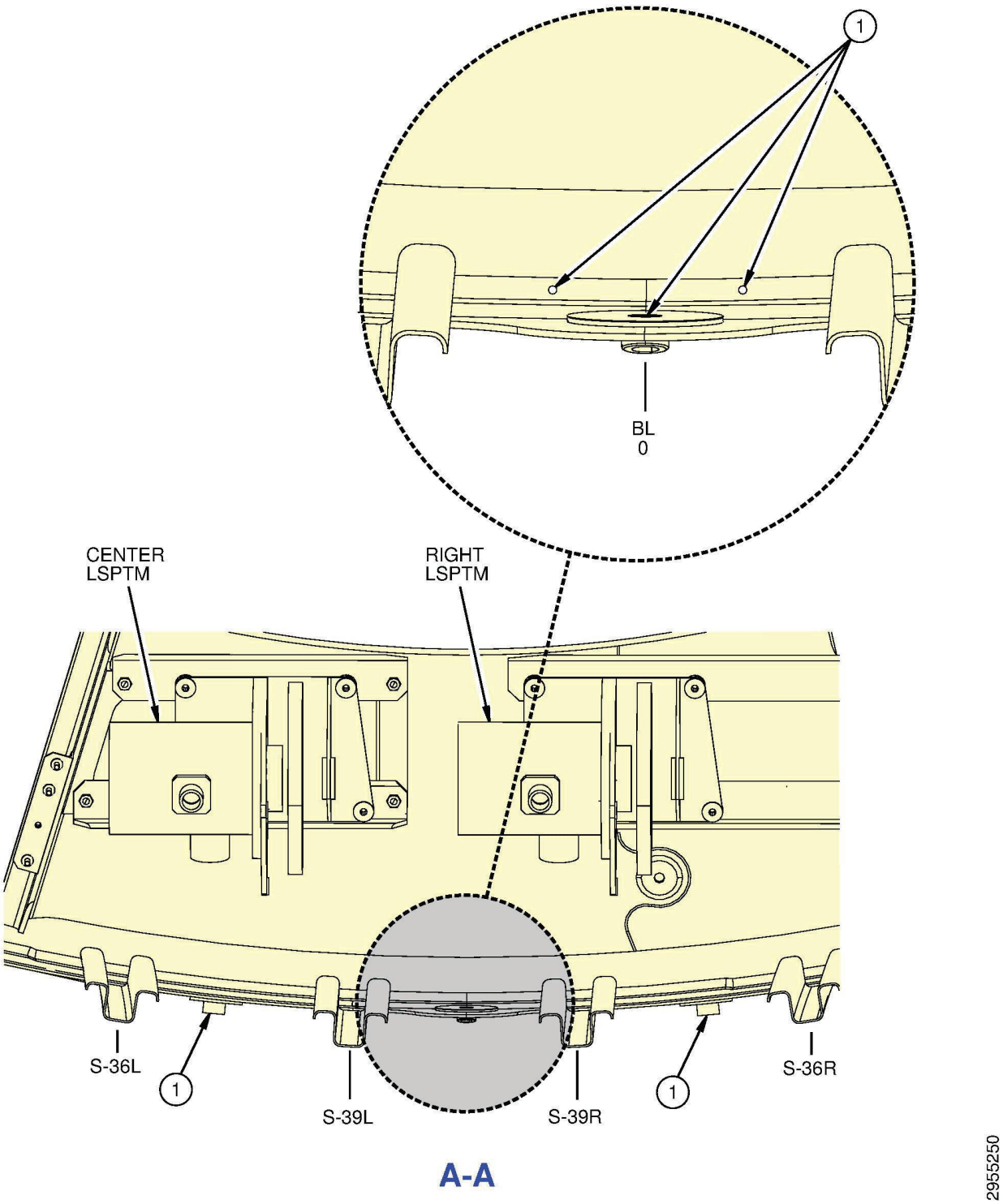

FIGURE 2: DRAIN HOLE BLOCKAGE INSPECTION
(SHEET 2 OF 3)

Export Controlled ECCN: 9E991
Copyright © Unpublished
Work - See page 1 for details.

The step numbers shown below agree with the numbers shown in the circle symbols in the figure. The QTY numbers shown below are the number of parts necessary for this figure.

Step	Task	Name	Identification	Qty	More Data
1	Inspect	DRAIN HOLE	-	5	By General Visual Inspection for any blockage.

FIGURE 2: DRAIN HOLE BLOCKAGE INSPECTION
(SHEET 3 OF 3)

Export Controlled ECCN: 9E991
Copyright © Unpublished
Work - See page 1 for details.