Service Bulletin No:	**53-013**	**Ref No:**	**169**
Modification No:	**Inspection**	**ATA Chapter:**	**53**

FUSELAGE - MAIN FRAMES
DO A CHECK OF THE MATERIAL SPECIFICATION OF THE FRAME 11 FITTINGS AND, IF NECESSARY, DO A CHECK FOR CRACKS

1. Planning Information

A. Effectivity

MSN 101 thru MSN 618.

All FR 11 left fittings P/N 112.35.07.489 and right fittings P/N 112.35.07.490, held as spare or in stock.

B. Concurrent Requirements

None.

C. Reason

(1) Problem

An operator reported Stress Corrosion Cracking (SCC) on the FR 11 left fitting P/N 112.35.07.489 and right fitting P/N 112.35.07.490 (known hereafter as “fittings”).

(2) Cause

Initially the material specification of the parts was AA2024-T351.

(3) Solution

Do a one time inspection of the fittings to:

(a) Check the material specification of the fittings.

(b) If the fittings are made from AA2124-T851, make an entry in the aircraft logbook as required in paragraph 3.F.(3).

(c) If the fittings are made from AA2024-T351, do a one time inspection with a borescope for cracks.

(d) If cracks are found, do the recovery procedure.

NOTE: Mandatory inspections will be added to Chapter 5 of the Aircraft Maintenance Manual (AMM). The inspections will give instructions on how to examine the fittings for cracks. The inspections will only be applicable to parts made from AA2024-T351.

NOTE: Service Bulletin 53-014 gives instructions and data on how to replace the parts made from AA2024-T351. The new parts are made from AA2124-T851. Parts that are replaced with those made from AA2124-T851 will cancel the requirement for the mandatory repetitive inspections.

D. Description

This Service Bulletin gives the data and instructions necessary to:

(1) Check the material specification of the FR 11 left and right fittings (P/N 112.35.07.489 and P/N 112.35.07.490).

(2) If the fittings are made from AA2124-T851, make an entry in the aircraft logbook of the new part number.

(3) If the fittings are made from AA2024-T351, do a one time inspection for cracks with a borescope and / or with eddy current equipment.

E. Compliance

Mandatory.

Accomplishment required not later than 120 days after the effective date of this Service Bulletin.

F. Approval

The technical content of this Service Bulletin is approved under the authority of Letter of DOA Acceptance ref. FOCA.21J.002.

Pilatus advises Operators/Owners to check with their designated Airworthiness Authorities for any changes, local regulations or sanctions that may affect the embodiment of this Service Bulletin.

G. Copyright Information

© Pilatus Aircraft Ltd. This document contains proprietary information that is protected by copyright. All rights are reserved. No part of this document may be copied, reproduced or translated to other languages without the prior written consent of Pilatus Aircraft Ltd.

H. Manpower

	Man-Hours Material Specification	Man-Hours Borescope Inspection	Man-Hours Eddy Current Inspection
Preparation	1.0		
Do the Test to Find the Material Specification	0.5		
Do the Crack Inspection with the Borescope		2.0	
If necessary, do the Crack Inspection with the Eddy Current Equipment (Inc Removal / Installation of the Horizontal Stabilizer)			9.0
Report the Inspection Results	0.5		
Close-Up	1.0		
TOTAL MAN-HOURS	**3.0**	**2.0**	**9.0**

I. Weight and Balance

(1) Weight Change

None.

(2) Moment Change

None.

J. Electrical Load Data

Not changed.

K. Software

Not changed.

L. References

Aircraft Maintenance Manual (AMM): 12-00-00, 20-31-00, 27-30-07, 55-10-01.

M. Publications Affected

AMM: 05-10-20, 53-10-06.

Structural Repair Manual (SRM): 51-00-05, 53-10-00.

N. Interchangeability of Parts

Not applicable.

2. Material Information

A. Material - Price and Availability

Modification Kit P/N 500.60.09.146 is required for this Service Bulletin.

Operators who require further information on Price and Availability should contact their Customer Liaison Manager at:

Pilatus Aircraft Ltd,
6371 Stans,
Switzerland.

Operators are requested to advise Pilatus Aircraft Ltd. of the Manufacturer's Serial Number (MSN), the flying hours and landings of aircraft which are allocated for this Service Bulletin using the Service Bulletin Evaluation Form.

NOTE: Kit No. 500.60.09.146 is the kit for the reference pieces used to help identify the material specification of the suspect parts. One kit is required for each fleet of aircraft.

NOTE: This is the same kit used for the accomplishment of Service Bulletins 51-001 and 53-008. If you have the pieces from that kit, you do not need to procure the kit again.

B. Material Necessary for Each Aircraft

(1) Material to be Procured

Kit No. 500.60.09.146 has these parts:

PART No.	DESCRIPTION	QTY	REMARKS
513.57.09.149	AA2024-T351 REFERENCE PLATE	1	
513.57.09.150	AA2124-T851 REFERENCE PLATE	1	

NOTE: One kit is required for each fleet of aircraft.

(2) Operator Supplied Materials (Ref. AMM, 20-31-00):

MATERIAL NO.	DESCRIPTION	QTY	REMARKS
P01-010	SOLVENT	A/R	Or equivalent
P02-031	ABSORBENT PAPER	A/R	Or equivalent

C. Material Necessary for Each Spare

Refer to Para. 4.

D. Re-identified Parts

If the fittings, either installed on the aircraft or held as spare, are made from AA2124-T851, their part numbers will change as follows:

DESCRIPTION	OLD PART NUMBER	RE-IDENTIFIED PART NUMBER
FRAME 11 LEFT FITTING	112.35.07.489	553.10.09.869
FRAME 11 RIGHT FITTING	112.35.07.490	553.10.09.870

E. Tooling - Cost and Availability

PART No.	DESCRIPTION	QTY	REMARKS
-	EDDY-CURRENT EQUIPMENT WITH CONDUCTIVITY MEASUREMENT PROBE	1	Local supply
	OR		
-	CONDUCTIVITY MEASUREMENT EQUIPMENT	1	Local supply
-	BORESCOPE (MINIMUM X 10)	1	Local supply

NOTE: Because of the difficult access, Pilatus recommends that the maximum diameter of the measurement probe is 3,15 mm (0.124 in.).

3. Accomplishment Instructions - On Aircraft

WARNING: READ AND OBEY THE MANUFACTURERS HEALTH INSTRUCTIONS BEFORE YOU USE THE CONSUMABLE MATERIALS.

A. Preparation

(1) Remove the access panels F17 and F18 (Ref. AMM, 12-00-00, Page Block 1).

(2) For better access, you can remove the elevator rear control-rod (Ref. AMM, 27-30-07, Page Block 401).

(3) Put a warning sign “DO NOT OPERATE THE FLIGHT CONTROLS” in the front and rear cockpits.

(4) Obey the manufacturer’s operating instructions and calibrate the conductivity measurement equipment.

(5) Put the eddy current probe in position on the reference plates (P/N 513.57.09.149 and P/N 513.57.09.150).

(6) Record the value shown on the test equipment.

NOTE: The temperature of these parts must be approximately the same:

- The left fitting (P/N 112.35.07.489)
- The right fitting (P/N 112.35.07.490)
- The reference plates (P/N 513.57.09.149 and P/N 513.57.09.150).

B. Do the Test to Find the Material Specification (Ref. Fig. 1)

NOTE: Only personnel that are qualified and authorized by their delegated Airworthiness Authorities are allowed to do this test.

NOTE: Because of the access, Pilatus recommends that the conductivity probe has a maximum diameter of approximately 3,15 mm (0.124 in.).

(1) For the left fitting (1) (P/N 112.35.07.489):

(a) Remove the dirt and grease from the test area with the absorbent paper (Material No. P02-031) made moist with the solvent (Material No. P01-010).

NOTE: It is not necessary to remove the layers of surface protection (including paint) to do the test.

NOTE: The temperature of the fittings must be approximately the same as the reference plates (P/N 513.57.09.149 and P/N 513.57.09.150).

(b) Put the eddy current probe in position on the left fitting (1) (P/N 112.35.07.489).

NOTE: Do this through the hole on FR11. Use a torch and mirror to make sure the eddy current probe is in the correct position.

(c) Record the value shown on the test equipment.

(d) Compare the value recorded above with the values recorded in Step 3.A.(6) and determine if the fitting is manufactured from AA2024-T351 or AA2124-T851.

(e) Do Steps 3.B(1)(b) thru (d) again to make sure the result is the same.

(f) Make a note of the type of material that the left fitting (1) (P/N 112.35.07.489) is made from.

(2) Do Step 3.B.(1) of this Service Bulletin again on the right fitting (2) (P/N 112.35.07.490).

(3) If you find a left or right fitting made from AA2024-T351, continue this Service Bulletin from Step 3.C.

(4) If the left and right fittings are made from AA2124-T851, continue this Service Bulletin from Step 3.D.

C. Do an Inspection to Find Cracks with the Borescope and / or Eddy Current (Ref. Fig. 2)

NOTE: Step 3.C. is only applicable to fittings made from AA2024-T351.

NOTE: Only personnel that are qualified and authorized by their delegated Airworthiness Authorities are allowed to do this test.

NOTE: If you find cracks, you must replace the fitting before the next flight (Ref. Service Bulletin 53-014).

(1) Obey the manufacturer's instructions and use a borescope to examine the fitting from inside FR11 (looking AFT) for cracks (Ref. Fig. 2).

NOTE: Make sure you examine all the visible faces of the fittings.

(2) If you find cracks, you must replace the fitting before the next flight (Ref. Service Bulletin 53-014). Make a copy of the Inspection Report Form (Ref. Fig. 3).

(3) If you do not find cracks in the area examined in Step 3.C.(1):

(a) Remove the horizontal stabilizer (Ref. AMM, 55-10-01, Page Block 401).

NOTE: If you must remove the horizontal stabilizer (Ref. AMM, 55-10-01, Page Block 401), you could replace the fittings (Ref. SB 53-014). This will negate the repeat inspections (and removal of the horizontal stabilizer) every year.

(b) Obey the manufacturer's operating instructions and calibrate the eddy current equipment.

(c) Examine the area shown in Fig. 2 with the eddy current equipment.

(4) If you find cracks, you must replace the fitting before the next flight (Ref. Service Bulletin 53-014). Make a copy of the Inspection Report Form (Ref. Fig. 3).

(5) If you do not find cracks in the area examined in Steps 3.C.(1) and Step. 3.C.(3), make a report of the inspection results, refer Step 3.D.

D. Report the Inspection Results

(1) Make a copy of the Inspection Report Form (Ref. Fig. 3).

(2) Complete the Inspection Report Form:

- Give the date of the inspection.
- Give the aircraft details.
- Show the location(s) and dimensions of the crack(s) found (if applicable).
- Add any comments.

NOTE: If there are no crack indications, use the Inspection Report Form to tell Pilatus Aircraft Ltd the aircraft details.

(3) Add the part number of the fittings to the final column of the Status of Parts Form (Ref. Fig. 4).

NOTE: If the fittings are made from AA2024-T351, the part number will be the same as that entered in column 3. If the fittings are made from AA2124-T851, the part number will change as shown in Para. 2.D.

(4) Send or fax the completed form(s) and a copy of the Status of Parts Form (Ref. Fig. 4) to Pilatus Customer Support.

E. Job Close-Up

(1) Remove all equipment, materials and tools from the work area. Make sure that the work area is clean.

(2) If necessary, install the elevator rear control-rod (Ref. AMM, 27-30-07, Page Block 401).

(3) If necessary, install the horizontal stabilizer (Ref. AMM, 55-10-01, Page Block 401).

(4) If necessary, install the access panels F17 and F18 (Ref. AMM,12-00-00, Page Block 1).

(5) Remove the warning signs from the front and rear cockpits.

F. Documentation

(1) Make an entry in the Aircraft Logbook that this Service Bulletin has been incorporated.

(2) Use the Service Bulletin Evaluation Sheet and report your results and the serial number of the aircraft to Pilatus.

(3) Put the Status of Parts Form (Ref. Fig 4) in the Aircraft Logbook.

NOTE: If the fittings are made from AA2024-T351 but have no cracks, you will need to do repetitive inspections (Ref. AMM, Chapter 05). You will need this Form (Ref. Fig. 4) to tell you which fittings require the inspection.

4. Accomplishment Instructions - FR11 Fittings Held as Spare or in Stock

NOTE: This procedure is applicable to all fittings (P/N 112.35.07.489 and P/N 112.35.07.490) held as spare or in stock.

A. Preparation

(1) Obey the manufacturer's operating instructions and calibrate the conductivity measurement equipment.

(2) Put the eddy current probe in position on the reference plates (P/N 513.57.09.149 and P/N 513.57.09.150).

(3) Record the value shown on the test equipment.

NOTE: The temperature of the fittings (P/N 112.35.07.489 and P/N 112.35.07.490) and the reference plates (P/N 513.57.09.149 and P/N 513.57.09.150) must be approximately the same.

B. Do the Test to Find the Material Specification

NOTE: Only personnel that are qualified and authorized by their delegated Airworthiness Authorities are allowed to do this test.

(1) For a fitting (P/N 112.35.07.489 or P/N 112.35.07.490):

WARNING: BE CAREFUL WHEN YOU USE THE CONSUMABLE MATERIALS. OBEY THE MANUFACTURER'S HEALTH AND SAFETY INSTRUCTIONS.

(a) Remove the grease from the test area with the absorbent paper (Material No. P02-031) made moist with the solvent (Material No. P01-010).

NOTE: It is not necessary to remove the layers of surface protection (including paint) to do the test.

(b) Put the eddy current probe in position on the fitting (P/N 112.35.07.489 or P/N 112.35.07.490).

(c) Record the value shown on the test equipment.

(d) Compare the value recorded above with the values recorded in Section 4.A.(3) and determine if the fitting (P/N 112.35.07.489 or P/N 112.35.07.490) is made from AA2024-T351 or AA2124-T851.

(e) Do Steps 4.B(1)(b) thru (d) again to make sure the result is the same.

(f) If the fitting (P/N 112.35.07.489 or P/N 112.35.07.490) is made from AA2024-T351, send it to Pilatus Customer Support. Pilatus will send a replacement fitting (P/N 553.10.09.689 or P/N 553.10.09.690) made from AA2124-T851.

(g) If the fitting (P/N 112.35.07.489 or P/N 112.35.07.490) is made from AA2124-T851, re-identify the fitting (Ref. Para. 2.D.) with a permanent marker pen (or equivalent).

C. Job Close-Up

(1) Return the fittings to stores.

(2) Make sure the part number is correct and either:

- P/N 553.10.09.689 (New) or P/N 553.10.09.869 (Re-identified)
- P/N 553.10.09.690 (New) or P/N 553.10.09.870 (Re-identified).

D. Documentation

(1) Make an entry on the serviceable label (attached to the fitting) that this Service Bulletin has been incorporated.

(2) Use the Service Bulletin Evaluation Sheet and report your results to Pilatus.

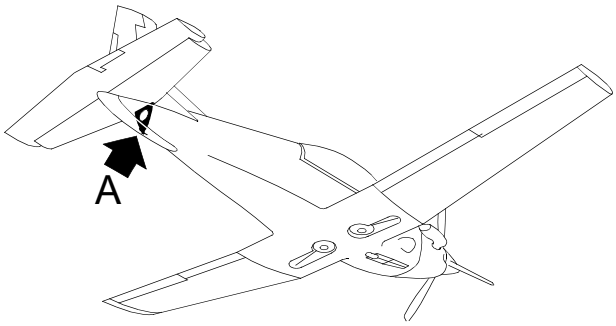

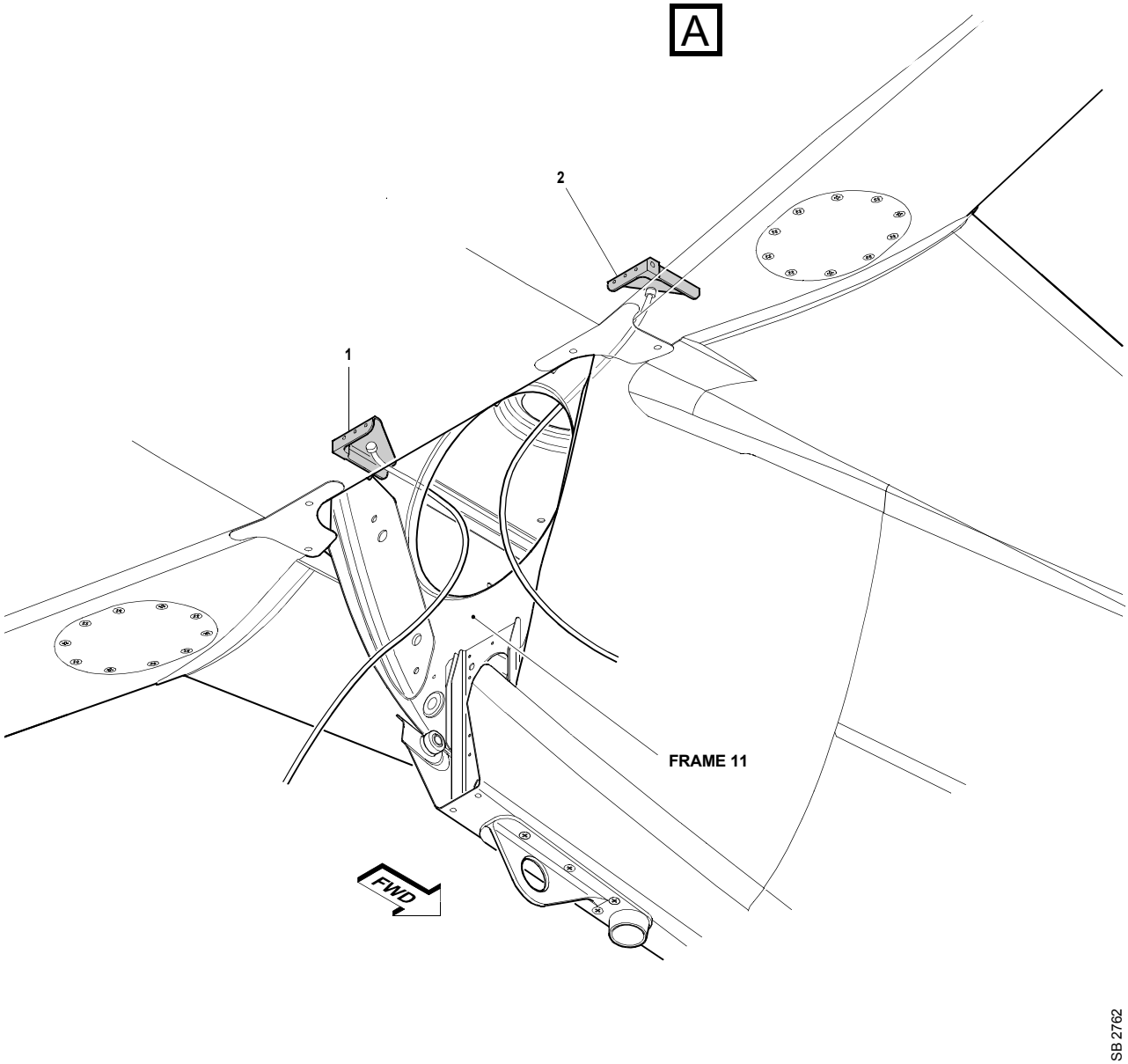

Check of the Material Specification
Figure 1

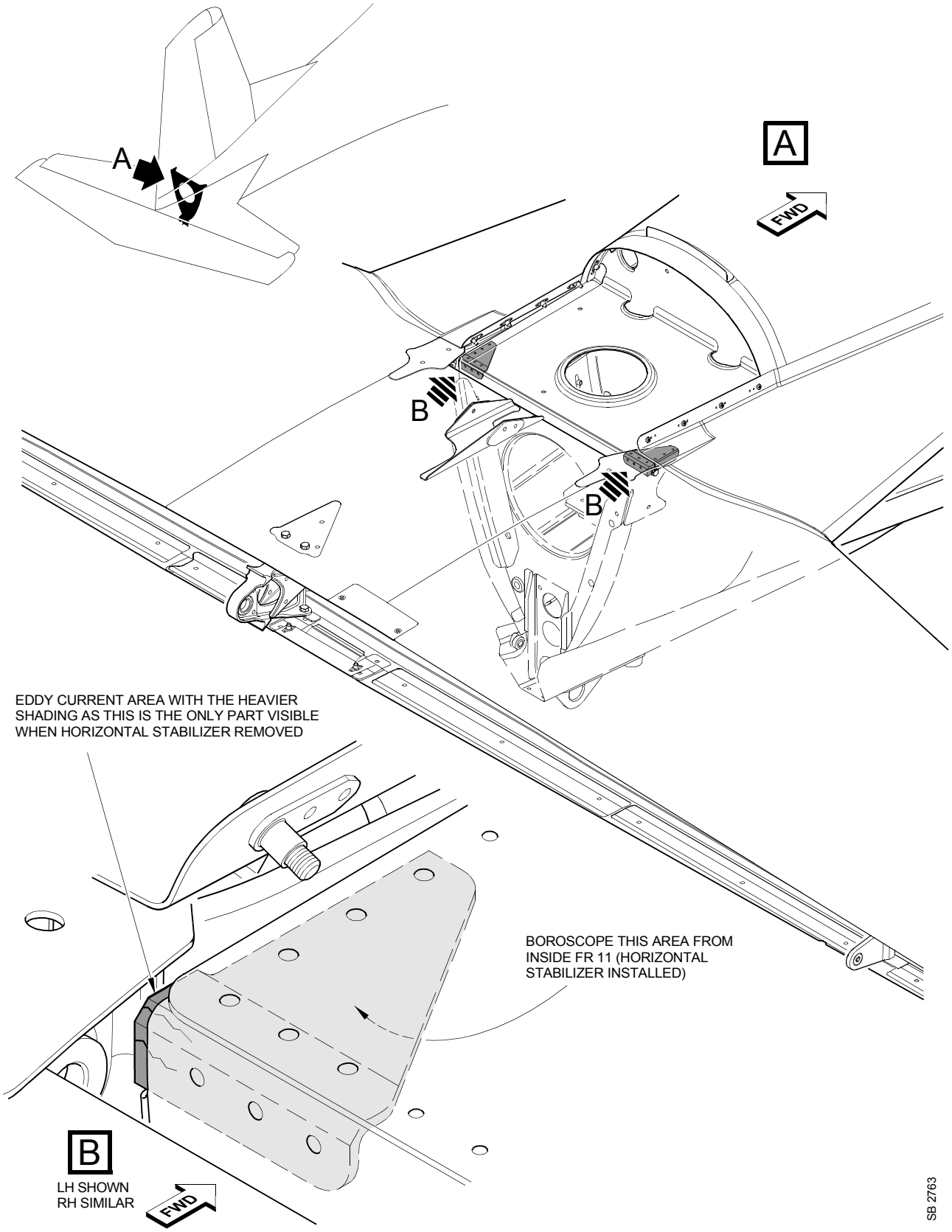

Fittings - Crack Inspection (If Necessary)
Figure 2

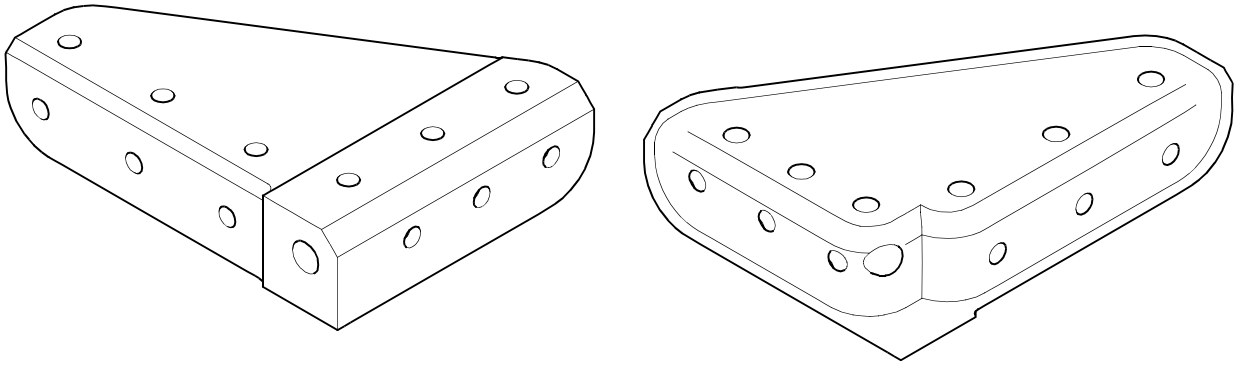

FRAME 11 LEFT FITTING

DATE:		AIRCRAFT MSN:	FLYING HOURS:	LANDINGS:
CRACK 1 LENGTH	mm	ADDITIONAL COMMENTS		
CRACK 2 LENGTH	mm			
CRACK 3 LENGTH	mm			
CRACK 4 LENGTH	mm			

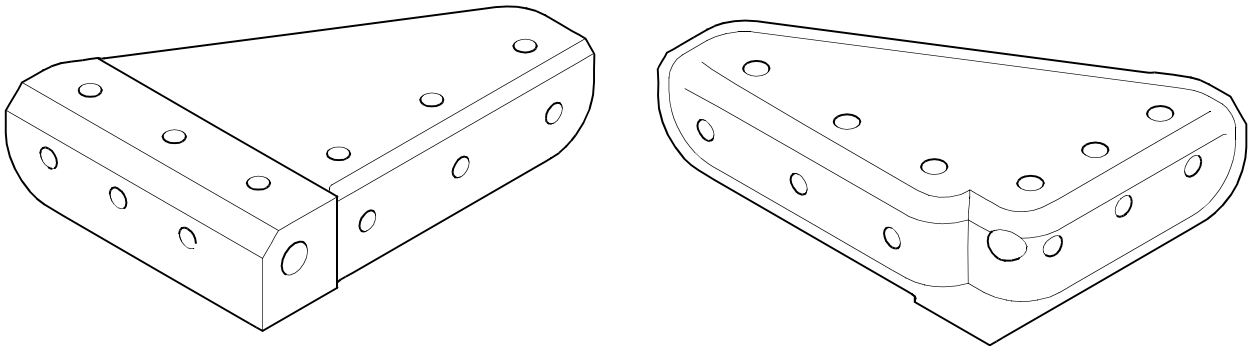

FRAME 11 RIGHT FITTING

DATE:		AIRCRAFT MSN:	FLYING HOURS:	LANDINGS:
CRACK 1 LENGTH	mm	ADDITIONAL COMMENTS		
CRACK 2 LENGTH	mm			
CRACK 3 LENGTH	mm			
CRACK 4 LENGTH	mm			

SB 2747

Left and Right Fittings - Inspection Form
Figure 3

Line No.	Component	Part Number	Material, after accomplishment of this Service Bulletin	Part Number, after accomplishment of this Service Bulletin
1	The FR11 left fitting	112.35.07.489		
2	The FR11 right fitting	112.35.07.490		

Status of Parts Form
Figure 4

SERVICE BULLETIN EVALUATION SHEET FOR SB No. 53-013				
Title	**Fuselage - Main Frames Do a Check of the Material Specification of the Frame 11 Fittings and, If Necessary, Do a Check for Cracks**			
Customer				
Service Center				
EMBODIMENT REPORTING				
This SB has been embodied:			**On the entire fleet**	
			Only partially	
Provide embodiment details per aircraft (use additional copies of this table, if necessary)				
MSN	**Flying Hours**	**MSN**	**Flying Hours**	
Additional embodiment comments/findings				
EDITORIAL COMMENTS (procedure, kit quality, suggested improvements, etc.)				
Name	Signature	Date		

Please complete and forward this form to:

Pilatus Aircraft LTD,
Customer Technical Support (MCC),
P.O. BOX 992,
6371 Stans, Switzerland
Fax: +41 (0)41 619 6773
Email: Techsupport@pilatus-aircraft.com

SERVICE BULLETIN EVALUATION SHEET

INTENTIONALLY BLANK