SERVICE BULLETIN
REVISION TRANSMITTAL SHEET

MODEL BD-100-1A10 (CH-300)

Discard the Revision 01 of this Service Bulletin dated Sep 23/2013 and the Information Sheet dated Aug 04/2014, and replace in its entirety with this Revision 02.

Service Bulletin No.	100-25-35		
Date of Basic Issue	Nov 15/2012		
Revision No.	01	Dated	Sep 23/2013
Revision No.	02	Dated	Jan 11/2016

This revision has no effect for aircraft on which the Basic Issue and Revision 01 of this Service Bulletin was done thus no other action is necessary. Do not sign the log book if you have not done this revision. Keep the previous log book entry. You may make an entry as "Not Applicable" for this revision.

This revision is issued to:

1. Revise the Service Bulletin Summary Sheet, to add the TLMC reference.
2. Add, in Paragraph 1.H., a statement for the tools and equipment that are necessary.
3. Change, in Paragraph 2.B.(7)(k), the part no. of the fuse.
4. Change, in Paragraph 2.E.(7), the part no. of the fuse.
5. Change, in Paragraph 3.A., in Kit 100K25-35B, the quantity of fuse holder, Part No. HFA-R, to 2.
6. Add, in Paragraph 3.A., in Kit 100K25-35B, a reference to fuse, Part No. MDA-5-R.
7. Incorporate the Information Sheet dated Aug 04/2014 that informed operators of a typographical error in Paragraph 3.A., in the parts list of Kit 100K25-35B.
8. Make miscellaneous minor changes, as necessary, with no change of context.

SERVICE BULLETIN SUMMARY

This Service Bulletin is available at:
www.cic.bombardier.com

BD-100-1A10 (CH-300)

ATA 25-53

EQUIPMENT/FURNISHINGS

MODIFICATION – BAGGAGE COMPARTMENT – MODIFICATION TO THE LH & RH BAGGAGE BAY HEATER INSTALLATIONS AND REACTIVATION OF THE LH BAGGAGE BAY HEATER AFTER MODIFICATION AND RE-IDENTIFICATION AS PART NO. 3436-07

The information below is provided for your reference. For full details, please see corresponding paragraph contained within this bulletin.

RECOMMENDED SPECIFIED TIME COMPLIANCE	**COMPLIANCE TIME** **Within 60 months of this Service Bulletin release date (Basic Issue)**
EFFECTIVITY: A/C Serial No. **20003** to **20364, 20366, 20367, 20369** and **20372**	
MANPOWER: Up to 12 man-hours (Refer to Paragraph 1.F.)	

CONTINUED AIRWORTHINESS (CAW) FLEET CAMPAIGN	**YES**	☐	**NO**	☒
TLMC, CH 5 AFFECTED	**YES**	☐	**NO**	☒
KITS and/or PARTS	**YES**	☒	**NO**	☐
TOOLING/GSE	**YES**	☒	**NO**	☐
PLANNING INFORMATION: See important information at the start of Paragraph 1.	**YES**	☐	**NO**	☒
DEDICATED SCHEDULE	**YES**	☐	**NO**	☒

PREREQUISITE SERVICE BULLETINS: N/A

To place an order for parts or kits, please call Bombardier Aerospace Parts Services at:

514-855-2999 or 1-866-538-1247

SERVICE BULLETIN

This Service Bulletin is available at:
www.cic.bombardier.com

BD-100-1A10 (CH-300)

ATA 25-53

EQUIPMENT/FURNISHINGS

MODIFICATION – BAGGAGE COMPARTMENT – MODIFICATION TO THE LH & RH BAGGAGE BAY HEATER INSTALLATIONS AND REACTIVATION OF THE LH BAGGAGE BAY HEATER AFTER MODIFICATION AND RE-IDENTIFICATION AS PART NO. 3436-07

1. PLANNING INFORMATION

A. Effectivity

BD-100-1A10 aircraft, Serial No. **20003** to **20364, 20366, 20367, 20369** and **20372**.

All other BD-100-1A10 aircraft are scheduled for the modification before delivery.

NOTE: The instructions given in this Service Bulletin are only applicable to the systems and parts installed at the time of delivery of the aircraft or as changed by Bombardier Aerospace Service Bulletin(s).

Before you do this bulletin, examine all STC, STA or equivalent action changes to make sure that this bulletin can be completed.

B. Reason

Alert Service Bulletin A100-25-30, which has an Airworthiness Directive, TCCA AD # CF-2009-38 or FA AD # 2009-25-13, which require deactivation of the LH baggage compartment heater if a heater mat Part No. 3436-06-1/0 is installed, was released in July 2009 to deactivate the left hand baggage heater. This was done to prevent over-heating of the baggage bay liner.

This Service Bulletin introduces a modification for the reactivation of the left hand baggage heater. It modifies and re-identifies the LH heater mat with a new Part No. It installs spacers between the LH sidewall panel and the heater mat and it also connects the LH and RH heater mats in series to reduce the power. This will prevent overheating because the heat will be transmitted at a lower power rate to the heater mats.

This Service Bulletin also gives instruction to install a coupling nut heater on the water line located under the water tank.

Refer to applicable governmental agency regulations and requirements and make sure that the work described in this Service Bulletin is performed in compliance with manufacturer's recommendations and/or acceptable industry standards.

This document is proprietary to Bombardier Inc. and/or its affiliates and may not be reproduced or copied in any form or by any means without the prior written consent of Bombardier Inc. and/or its affiliates.

© 2012 - 2016 Bombardier Inc. All rights reserved
Learjet, Challenger, Global, are registered trademarks of Bombardier Inc. or its subsidiaries.

C. Description

This Service Bulletin gives instructions to:

- Get access to the baggage compartment,
- Do the Baggage Bay Heater Placards installation in accordance with Bombardier Aerospace, Drawing, BAS68038168,
- Do the Coupling Nut Heater installation under the water tank in accordance with Bombardier Aerospace, Drawing, BAS68038169,
- Do the heater mat modification and identify as Part No. 3436-07,
- Do the LH baggage heater installation modification in accordance with Bombardier Aerospace, Drawing, BAS68038170 or BAS68038171,
- Do the electrical modification of the heater mats wiring in accordance with Bombardier Aerospace, Drawing, BAS68028059, and
- Do the necessary tests to make sure that the system operates correctly.

D. Compliance

Recommended within 60 months from this Service Bulletin release date (Basic Issue).

E. Approval

The technical content of this Service Bulletin has been approved under the authority of Transport Canada Civil Aviation (TCCA).

NOTES: 1. The technical content of this Service Bulletin is accepted by the FAA under the Canada/USA bilateral Aviation Safety Agreement.

2. The technical content of this Service Bulletin is accepted by the JAA and by EASA in accordance with established procedures.

F. Manpower

NOTES: 1. The man-hours given are estimates to help you schedule the tasks given in this bulletin. The estimates are for direct labor performed by an experienced crew and do not include the time for familiarization, planning, aircraft preparation in hangar such as towing and positioning of scaffolds, removal of interior furnishings, repainting, supervision and inspection.

For more information related to the manpower estimates, refer to SB 100-00-02.

2. This Service Bulletin may require consumable materials that have specific curing times (refer to Paragraph 3). The accumulated curing time is not included in the labor estimates and should be considered for planning purposes before you schedule this Service Bulletin.

Up to 12 man-hours may be necessary to do this modification. These hours are broken down as follows:

- 10 man-hours are necessary to do the modification of this Service Bulletin.
- An additional 2 man-hours are necessary to do the sidewall panel modification as instructed in Paragraph 2.C., for aircraft Serial No. **20124**, **20125**, **20128**, **20134**, **20139**, **20143**, **20146** and **20148** to **20215**.

The labor required to do this Service Bulletin is at no cost for aircraft in Completion Warranty at the time of release of Alert Service Bulletin A100-25-30 (Basic Issue, released on July 20th, 2009) if:

(i) the work is done at Bombardier Business Aviation Services (BBAS) or Authorized Service Facilities (ASF), and

(ii) this Service Bulletin is scheduled in less than 60 months from its release date (Basic Issue).

G. Material - Cost and Availability

The kits listed in Paragraph 3.A., may be necessary to do this Service Bulletin. Refer to the table that follows for the applicable aircraft effectivity:

KIT/PART NO.	ITEM	PRICE	AIRCRAFT EFFECTIVITY
100K25-35	Kit	Please contact Bombardier Aerospace Parts Services, in Montreal, for delivery lead times and confirmation of prices.	**20003** to **20284, 20286, 20288** and **20301**
100K25-35A	Kit		**20003** to **20259**
100K25-35B	Kit		**20003** to **20364, 20366, 20367, 20369** and **20372**

In addition to the kits shown above, the parts listed in Paragraph 3.B. may be necessary to do this modification.

These kits and parts are available at no cost for aircraft in and out of warranty if a no-charge purchase order is sent to Bombardier Aerospace in less than 60 months, from this Service Bulletin release date (Basic Issue).

During or after the above free period, Smart Parts Plus does not pay for the kits and parts.

H. Tooling

The equipment and tools listed below are necessary to do this modification:

GSE REFERENCE NO.	PART NO.	DESCRIPTION
GSE 24-00-24	S4933959-501	Tag, Circuit Breaker
GSE 20X-00-04	M1-G-KIT	Portable bonding tester
Commercially Available	-	Clamp on, Ammeter
Commercially Available	-	Wire, Stripper (14 AWG wire)
Commercially Available	-	Heat Gun
Commercially Available	ERG-4002	Thomas & Betts, Sta-Kon Crimper
	WT-112M	
Commercially Available	-	Digital Multimeter (range 0.1Ω to 50 MΩ)

Refer to the Standard Practices Manual (SPM), Wiring Manual (WM), Chapter 20, and the table that follows for the tools applicable to the wiring modification:

LUG/CONTACT	TOOL (See NOTE 3)			
	CRIMP	POSITIONER	INSERTION	EXTRACTION
M39029/22-191	M22520/7-01	M22520/7-11	M81969/14-01 (GREEN)	M81969/14-01 (WHITE)
M39029/22-605	M22520/1-01	M22520/1-16	M81969/16-03 (YELLOW)	M81969/16-03 (WHITE)

NOTES:
1. Refer to the BD-100 Illustrated Tool and Equipment Manual (ITEM) to make sure that you use the correct equipment configuration.
2. Refer to the Liability Statement in the ITEM for acceptable GSE equivalents.
3. This list is provided for quick reference. In case of discrepancy between this list and the tools called in the SPM, WM, Chapter 20, then the tools called in the SPM, WM prevail. Other approved alternative tools are acceptable and can also be used.

I. Weight and Balance

A/C SERIAL NO.	WEIGHT	MOMENT
20003 to 20284, 20286, 20288, and 20301 (Kit 100K25-35)	+0.146 pound (0.066 kg)	+93.41 pound-inches (0.067 kgm)
20003 to 20259 (Kit 100K25-35A)	+0.000 pound (0.000 kg)	+0.08 pound-inches (0.000 kgm)
20003 to 20364, 20366, 20367, 20369 and 20372 (Kit 100K25-35B)	+0.304 pound (0.138 kg)	+193.14 pound-inches (0.139 kgm)

J. Electrical Load Data

This modification decreases the continuous load as follows:

BUS	AMPS	KW	KVAR
28 V dc R AUX BUS	17.7 amps (continuous)	-	-

K. References

- Transport Canada (TC) Supplemental Type Certificate (STC), SA04-112.
- ACS – NAI, Modification Data Summary (MDS), G874000 Rev. A.
- TCCA Airworthiness Directive, # CF-2009-38.
- FAA Airworthiness Directive, # 2009-25-13.
- Bombardier Aerospace, Drawing, BAS68028059, Rev. F.
- Bombardier Aerospace, Drawing, BAS68038168, Rev. A.
- Bombardier Aerospace, Drawing, BAS68038169, Rev. A.
- Bombardier Aerospace, Drawing, BAS68038170, Rev. C.
- Bombardier Aerospace, Drawing, BAS68038171, Rev. B.
- Bombardier Aerospace, Restriction and/or Special Instruction (RSI), C-100-000-25-0015, Rev. --.
- Bombardier Aerospace, Functional Test Engineering Requirements (FTER), BI100-21445101 Rev. B.
- Bombardier Aerospace Service Bulletin 100-00-02, “Service Bulletin Description and Policy”.
- BD-100 Aircraft Maintenance Manual (AMM), Chapters 6, 24, 25, 27 and 52.
- BD-100 Supplemental Maintenance Manual (SMM), Chapters 21 and 25.
- Bombardier Aerospace, Standard Practices Manual (SPM), Chapter 20.

- BD-100 Instructions for Continued Airworthiness (ICA), Document Number BAS68058003-ICA, Rev. B (attached).
- Cox & Co. Field Modification Instructions, D-11338.

L. Other Publications Affected

None.

M. Equivalent Service Bulletin

None.

2. ACCOMPLISHMENT INSTRUCTIONS

NOTES: 1. All TASKs referenced in the procedures that follow are from the BD-100 Aircraft Maintenance Manual, unless otherwise specified.

2. All references made to zones, access panels and/or doors, are from the BD-100 Aircraft Maintenance Manual, Chapter 6.

3. Make sure that all surrounding equipment and furnishings are properly protected. Failure to do so may result in damage to equipment or furnishings.

A. Aircraft Setup

(1) Obey all the electrical/electronic safety precautions. Refer to AMM 24-00-00-910-801.

(2) In the flight compartment, open and tag the circuit breaker that follows:

CB PANEL	CB NO.	NAME	ZONE
RCBP	D11	ENVIRONMENTAL CARGO HEATER	212

(3) Open the Aft Equipment-Compartment door 182GL. Refer to AMM 52-41-00-010-801.

(4) In the aft equipment compartment, open and tag the circuit breakers that follow:

CB PANEL	CB NO.	NAME	ZONE
RDCPC	C6	ENVIRONMENTAL BAG COMP HTR PWR 1	312
RDCPC	C7 (see Note)	ENVIRONMENTAL BAG COMP HTR PWR 2	312
Note: Circuit breaker C7 will already be open and tagged on aircraft Post Alert SB, A100-25-30.			

(5) Get access to the baggage compartment from the main cabin.

(6) Remove the baggage compartment headliner and keep the attaching hardware for later installation. Refer to SMM Chapter 25-53-03.

(7) Remove the L/H baggage compartment panels and keep the attaching hardware for later installation. Refer to SMM Chapter 25-53-05.

(8) Remove the insulation blankets in the ceiling area and in the LH sidewall area as required to have access to the wire harness.

B. Modification – Baggage Bay Sidewall Panel and Heater Mat

For aircraft, Serial No. **20003** to **20123**, **20126**. **20127**, **20129** to **20133**, **20135** to **20138**, **20140** to **20142**, **20144**, **20145** and **20147**, do the modification to the sidewall panel applicable to Precision Pattern Incorporated (PPI) interiors. Refer to drawing BAS68038171.

For aircraft, Serial No. **20124**, **20125**, **20128**, **20134**, **20139**, **20143**, **20146**, **20148** to **20284**, **20286**, **20288** and **20301,** do the modification to the sidewall panel applicable to the Fischer Advanced Composite Components (FACC) interiors. Refer to drawing BAS68038170.

(1) Remove the heater mat Part No. 3436-06-1/0 from the LH sidewall panel. Refer to SMM Chapter 21-42-01.

NOTE: The heater mat may also be referred to as 3436-06-I/O or 3436-06.

(2) For aircraft, Serial No. **20124**, **20125**, **20128**, **20134**, **20139**, **20143**, **20146** and **20148** to **20215**, with the heater mat glued to the sidewall panel, rework the sidewall panel as instructed in Paragraph 2.C. before you continue to step 2.B.(3).

(3) Discard the attaching hardware when you rework the sidewall panels installed on the aircrafts identified in Paragraph 2.B. only; otherwise keep the attaching hardware for later installation.

(4) Install the felt spacers (12) Part No. 253-44020-060 (qty 10) on the LH sidewall panel as shown in Detail “B” and section E-E, with epoxy adhesive DP-460, per manufacturer instructions.

(5) Install the felt spacers (12) Part No. 253-44020-060 (qty 6) on the panel doubler as shown in Detail “B” and section D-D, with epoxy adhesive DP-460, per manufacturer instructions.

(6) Locate the felt spacers (11) Part No. 253-44020-061 (qty 6) on the LH sidewall panel attachment points as shown in section C-C.

(7) For aircraft, Serial No. **20003** to **20364**, **20366**, **20367**, **20369** and **20372**, do the modification to the heater mat Part No. 3436-06-1/0 as follows: Refer to Figure 1.

(a) Disconnect the heater’s two power leads (14 AWG White wires) from the TM415 pin “D” and pin “E”.

(b) Select one of the two 14 AWG leads (White) from the heater mat and cut it minimum 6 in (15.24 cm) from the clamp on the heater mat and keep the cut section for later installation.

(c) Strip 0.38 in (9.65 mm) of the wire insulation from the wire connected to the heater mat. Refer to SPM WM 20-11-00-02.

(d) Slide a piece of shrink sleeve approximately 0.75 in (19.05 mm) long on the wire.

(e) Insert the stripped wire in the crimp barrel of the male half of the fuse holder and crimp in position with the Sta-Kon manual crimper.

(f) Slide the shrink sleeve over the crimped connection and heat shrink the sleeve with a heat gun per best shop practice.

(g) Strip 0.380 in (9.65 mm) of the wire insulation from the previously cut section of wire.

(h) Slide a piece of shrink sleeve approximately 0.75 in (19.05 mm) long on the wire.

(i) Insert the stripped wire in the crimp barrel of the female half of the fuse holder and crimp in position with the Sta-Kon manual crimper.

(j) Slide the shrink sleeve over the crimped connection and heat shrink the sleeve with a heat gun per best shop practice.

(k) Insert the fuse, Part No. MDA-8-R, in one of the fuse holder halves, assemble the two fuse holder halves together and twist to tighten.

(l) Attach the “FIELD MODIFIED” label Part No. 3436-172, that identifies the heater mat as Part No. 3436-07 to the lead wire with two cable ties, Part No. MS3367-4-9.

(m) Use a permanent marker to black out the old Part No. “3436-06-1/0” on the main surface of the heater mat.

NOTE: Part No. 3436-06-1/0 may also be referred to as 3436-06-I/O or 3436-06.

(n) After completion of the heater mat modification, measure the resistance across the two lead wires. The resistance should be within the following range: 2.12 to 2.59 Ω.

NOTE: The resistance measurement should be performed in a temperature environment between 12 and 32 °C (55 and 91 °F) with a digital multimeter capable of accurate resistance measurement below 10 Ω.

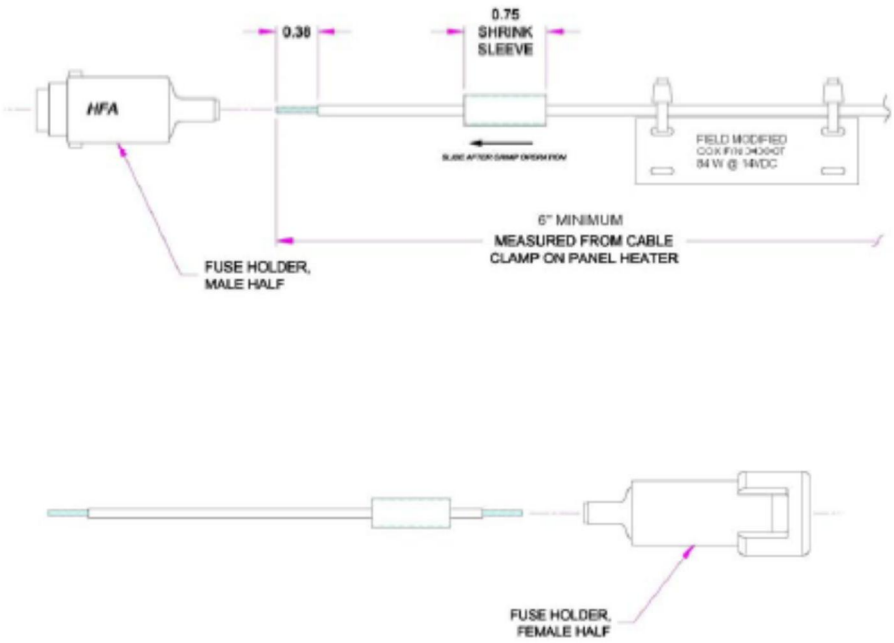

Figure 1 – Heater Mat Modification/Re-Identification

(8) Connect the heater's power leads (14 AWG White wires) in TM415 pin "D" and "E".

(9) Install the reworked heater mat Part No. 3436-07 on the LH sidewall panel with the removed attaching hardware. Refer to SMM Chapter 21-42-01.

NOTES: 1. For aircraft, Serial No. **20003** to **20123**, **20126**. **20127**, **20129** to **20133**, **20135** to **20138**, **20140** to **20142**, **20144**, **20145** and **20147**, with PPI sidewall panels, use the new screws, Part No. MS35206-243, and the new washers, Part No. NAS1149GN832P. Refer to drawing BAS68038171.

2. For aircraft, Serial No. **20124**, **20125**, **20128**, **20134**, **20139**, **20143**, **20146**, **20148** to **20284**, **20286**, **20288** and **20301** with FACC sidewall panels, use the new screws, Part No. MS35206-228, and the new washers, Part No. NAS1149GN632P. Refer to drawing BAS68038170.

(10) Rework the baggage heater wiring to have LHS and RHS sidewall heater mats connected in series to reduce the power as follows: Refer to drawing BAS68028059.

(a) Relocate wire FBH4664-14 in TM415, from pin A to pin C as shown on drawing. Refer to SPM WM 20-31-00.

(b) Remove and discard ground wire FBH5385N-14 from TM418, pin B. Refer to SPM WM 20-31-00.

(c) Install and connect wire 10BHT3524A-14 from TM415 pin A to TM418, pin B. Use existing cables support to attach in position with cable tie per best shop practice. Refer to SPM WM 20-16-00-02.

C. Modification – Baggage Bay - LH Sidewall Panel Blind Insert Installation

For aircraft, Serial No. **20124, 20125, 20128, 20134, 20139, 20143, 20146**, and **20148** to **20215**.

(1) Before you remove the heater mat, mark the location of the fastener holes as shown on drawing BAS68038170, sheet 2, detail “B”.

(2) Carefully drill pilot holes of 0.125 in (3.18 mm) diameter through the heater mat and the first layer only of the sidewall panel.

(3) Carefully remove the heater mat from the sidewall panel.

(4) Open the holes in the heater mat to a diameter of 0.143 to 0.147 in (3.63 to 3.73 mm).

(5) Use a counter bore to drill the holes, 0.452 to 0.457 in (11.48 to 11.60 mm) in diameter in the sidewall panel, but do not drill all the way to the other layer. Refer to Figure 2.

(6) With an appropriate rotary file, undercut the sandwich panel core to increase the potting cavity diameter to approximately 1.5 times the diameter of the insert hole. Refer to Figure 2.

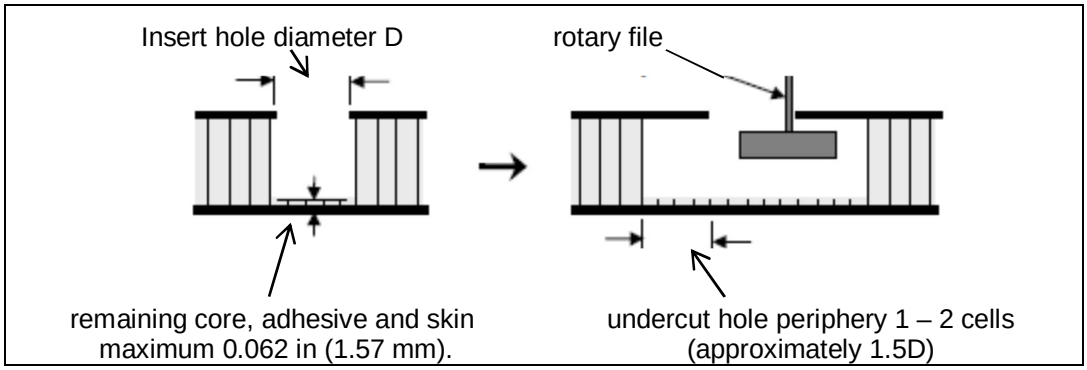

Figure 2

(7) Make sure to have a minimum clearance of 0.040 in (1.02 mm) between the tail of the insert and the inside surface of the lower panel skin.

(8) Carefully vacuum the insert holes to remove the dust and any loose material.

(9) Prepare the inserts, Part No. NAS1836-06-07, for installation as follows:

(a) Clean the insert with solvent. Refer to SPM 51-25-00-110-801.

(b) Stick the self-adhesive installation tab, Part No. NAS 1837, on the insert head. Make sure that the holes in the tab are aligned with the holes in the insert head surface.

NOTE: Handle the cleaned insert/tab assemblies by the tabs to prevent contamination of the bond surfaces.

(10) Install the blind inserts as follows:

(a) Put the insert in the hole and press down firmly on the tab to make sure you have full contact between the tab and the panel. Refer to Figure 3.

NOTE: Pre-potting is optional, unless otherwise specified.

(b) With an hypodermic syringe, inject the casting resin through one of the tab fill/vent holes until the cavity is filled and that casting resin comes out through the opposite fill/vent hole in the tab. Refer to Figure 3.

(c) Leave a small excess of casting resin on the tab fill and vent holes to prevent voids from shrinkage when the casting resin cures.

(d) Cure the casting resin for 168 hours at 25 °C (77 °F) or five hours at 25 °C (77 °F), then one hour at 65 °C (150 °F).

(e) After the casting resin has completely cured, remove the tab and trim the casting resin flush with the surface. Refer to Figure 3.

D. Modification – Baggage Heater Pictogram Installation

For aircraft, Serial No. **20003** to **20259** only:

(1) Install the RH side baggage heater pictogram Part No. 604DX1131000-373-B-L as shown in view A-A of drawing BAS68038168. Refer to SPM MM 20-80-01-400-801.

(2) Install the LH side baggage heater pictogram Part No. 604DX1131000-373-B-L as shown in view B-B of drawing BAS68038168. Refer to SPM MM 20-80-01-400-801.

E. Modification – Water Tank Heater Installation

(1) Locate the bracket harness support, Part No. B0816028-001 (qty 1), the clip harness support, Part No. B0816025-001 (qty 5) and the mounting base 4 way, Part No. B0816032 (qty 5), as shown in view A-A of drawing BAS68038169 and bond with acrylic adhesive. Refer to SPM 51-21-67.

NOTE: It is permissible to install the 4 way mounting base located at FS643.64 as shown in Figure 4 as an alternate installation, if there is a duct installed in the lightening hole that does not allow the routing of the wires as shown in view A-A of drawing BAS68038169.

(2) Install the heater tube coupling nut HR3BHT, Part No. 325-0296-01, as shown in Detail “B” of drawing BAS68038169. Refer to SPM MM 20-21-00-910-801.

(3) Connect and route wire Part No. 10BHT3525B from TM415 pin F to the heater tube coupling nut HR3BHT as shown on drawing BAS68038169 and drawing BAS68028059.

NOTE: For aircraft with a separate Navigation Interface Unit (NIU) installed between FS653.00 and FS643.00, route wire approximately as shown. If a deviation is required, route wiring per SPM-WM 20-12-00.

(4) Connect wire 10BHT3526N to ground stud GS3111 with terminal lug Part No. MS25036-108 and route to the heater tube coupling nut HR3BHT as shown on drawing BAS68038169 and drawing BAS68028059.

NOTE: For aircraft with a separate Navigation Interface Unit (NIU) installed between FS653.00 and FS643.00, route wire approximately as shown. If a deviation is required, route wiring per SPM-WM 20-12-00.

(5) Attach wiring to harness support and support structure as shown in view A-A and detail B of drawing BAS68038169 with tie-wraps per best shop practice.

(6) Connect wire Part No. 10BHT3525A to the heater HR3BHT with splice SP1BHT Part No. M81824/1-2.

(7) Install the fuse holder and the fuse, Part No. MDA-5-R, between wire Part No. 10BHT3525A and wire Part No. 10BHT3525B within 12.0 in. (30.48 cm) of heater tube coupling nut as shown on drawing BAS68028059. Refer to SPM WM 20-16-00.

(8) Connect wire Part No. 10BHT3526N to the heater HR3BHT with splice SP2BHT Part No. M81824/1-2 and to GS3111 with terminal lug Part No. MS25036-108 as shown on drawing BAS68028059. Refer to SPM WM 20-31-01-04 and SPM WM 20-16-00.

(9) Apply humiseal on GS3111 as necessary. Refer to SPM WM 20-41-00-02.

F. Testing

(1) In the aft equipment compartment, remove the tags and close the circuit breakers that follow:

CB PANEL	CB NO.	NAME	ZONE
RDCPC	C6	ENVIRONMENTAL BAG COMP HTR PWR 1	312
RDCPC	C7	ENVIRONMENTAL BAG COMP HTR PWR 2	312

(2) In the flight compartment, remove the tag and close the circuit breaker that follows:

CB PANEL	CB NO.	NAME	ZONE
RCBP	D11	ENVIRONMENTAL CARGO HEATER	212

(3) Do the functional test of the heater tube coupling nut located under the water tank and the sidewall heater mat as follows:

NO.	STEP	EXPECTED RESULT
1	Perform CARGO COMPARTMENT HEATERS TEST, in the MDC (Maintenance Data Computer). NOTE: Cargo compartment heaters test is accessible on IASC 1A in the LRU test.	• After several seconds, Heater Command annunciates ON. • Use a clamp on ammeter to verify that at terminal TM415 location on wire 10BHT3525B-14 the heater tube coupling nut current is between 0.09A (min) and 0.12A (max). • Verify that the heater tube coupling nut, is warm to the touch.
	NOTE: The baggage heaters will be turned off after five minutes of continuous operation. Also the baggage heater thermostats open at 125° F (37° C) and close at 80° F (26° C). High ambient temperature may require the baggage compartment to be cooled prior to test.	
2	Select TURN OFF CARGO COMPARTMENT HEATERS TEST in the MDC.	• After several seconds, Heater Command annunciates OFF. • Use a clamp on ammeter to verify that at terminal TM415 location on wire 10BHT3525B-14 the heater tube coupling nut current is zero ampere.
3	Perform again the CARGO COMPARTMENT HEATERS TEST, in the MDC.	• After several seconds, Heater Command annunciates ON. • At TM 415, use a clamp on ammeter around the heater mat lead to verify that the current is between 4.6A (min) and 6.8A (max).

NO.	STEP	EXPECTED RESULT
4	On the RCBP, open and tag Circuit Breaker D11, to remove electrical power	• When power is removed, after several seconds Heater Command annunciates OFF. • Verify that mat heaters current is zero.
5	Remove the tag and close circuit breaker D11 in RCBP.	

NOTE: On the ground and in flight with an aircraft altitude less than 20,000 feet (6096 m), the Cargo Heat Control Relay is not commanded and no power is provided to the baggage heaters. Above 20,000 feet (6096 m) IACS 1 Channel A energizes the relay and the cargo compartment heating system is then turned ON.

(4) Install the removed LH baggage compartment panels with the removed attaching hardware. Refer to SMM Chapter 25-53-05.

(5) Do the operational test of the baggage compartment heat system. Refer to BAS68058003-ICA, SMM Chapter 21-42-50.

(6) Insert BAS68058003-ICA into the existing aircraft Specific Maintenance Manual (SMM) in chapter 21-42.

G. Close-out

(1) Install the baggage compartment headliner panel with the removed attaching hardware. Refer to SMM Chapter 25-53-03.

(2) Make sure there are no loose materials, insulation and/or any FOD that may obstruct the safety valve sensing port, before you install the headliner panel. Use insulation tape to attach any loose insulation blankets if necessary. Refer to SPM MM 51-28-01-350-801.

(3) Remove all tools, equipment and unwanted materials from the aircraft.

(4) Close the Aft Equipment-Compartment door 182GL. Refer to AMM 52-41-00-410-801.

H. Recording

When this Service Bulletin is completed, make an entry in the aircraft log and send the attached Incorporation Notice to Bombardier Business Aircraft Customer Services (BBACS).

In an effort to improve the quality of our technical communications, we are requesting your feedback. Please take a moment to fill out our easy on-line Service Bulletin survey:

http://csefeedback.aero.bombardier.com

3. MATERIAL INFORMATION

A. Kit

Kit 100K25-35 is necessary to do this Service Bulletin on aircraft, Serial No. **20003** to **20284**, **20286**, **20288** and **20301** and contains the parts that follow:

NEW PART NO.	QTY	ITEM	USED PART NO.	INSTRUCTIONS - DISPOSITION
253-44020-060	16	Felt Spacer	-	-
253-44020-061	6	Felt Spacer	-	-
MS35206-228	7	Screw	-	-
MS35206-243	7	Screw	-	-
NAS1149GN632P	7	Washer	-	-
NAS1149GN832P	7	Washer	-	-

NOTE: This kit contains screws and washers for both type of sidewall panels, PPI and FACC, use the ones applicable to your aircraft's configuration.

Kit 100K25-35A is necessary to do this Service Bulletin on aircraft, Serial No. **20003** to **20259** and contains the part that follows:

NEW PART NO.	QTY	ITEM	USED PART NO.	INSTRUCTIONS - DISPOSITION
604DX1131000-373-B-L	2	Pictogram/ Baggage Heater	-	-

Kit 100K25-35B is necessary to do this Service Bulletin on aircraft, Serial No. **20003** to **20364, 20366, 20367, 20369** and **20372** and contains the parts that follow:

NEW PART NO.	QTY	ITEM	USED PART NO.	INSTRUCTIONS - DISPOSITION
325-0296-01 (1005355949-001)	1	Heater, Tube coupling Nut	-	-
3436-172	1	Cox & Co., Label	-	-
ALBCBS-310-59-1 (B0816028-001)	1	Bracket Harness Support	-	-
ALBCBS-304-59-01 (B0816025-001)	5	Clip Harness Support	-	-
ABM1M-AT (B0816032)	5	Base, Mounting 4 Way	-	-

NEW PART NO.	QTY	ITEM	USED PART NO.	INSTRUCTIONS - DISPOSITION
B0816019-001	30	Strap, Tie Down	-	-
BAS68028059/01	1	Wire Kit	-	-
HFA-R	2	Fuse Holder	-	-
MDA-5-R	1	Fuse	-	-
MDA-8-R	1	Fuse	-	-
M23053/5-106 (or equivalent)	2	Shrink, Sleeve	-	-
MS3367-4-9 (or equivalent)	2	Cable, Tie	-	-

NOTES: 1. In case of discrepancy between these lists and the "Service Bulletin Kit Parts List" contained in the respective kit, then the latter list prevails.

2. The actual quantity for some of the hardware contained in the kit can be greater than the amount shown in the table as these items are supplied in prepackaged quantities.

B. Parts

The part that follows may be necessary to do this Service Bulletin and is available from Bombardier Aerospace Parts Services, Montreal:

NEW PART NO.	QTY	ITEM	USED PART NO.	INSTRUCTIONS - DISPOSITION
NAS1836-06-07	6	Blind Insert	-	-

NOTE: The part number for the item listed above is subject to change without revision to this Service Bulletin. In case of discrepancy between this list and any other list, the Illustrated Parts Catalog prevails and shall be used to determine the latest part number.

C. Material

The materials that follow, or equivalent, are necessary to do this Service Bulletin. These can be purchased from a local supplier. Bombardier Aerospace does not pay for these consumables.

DESCRIPTION	PART No./NAME	SPECIFICATION	QUANTITY	SUPPLIER (See Note)
Acrylic Adhesive	Lord 201 / 19	-	As Necessary	Code: A
Epoxy Adhesive	Scotch Weld DP460	-	As Necessary	Code: B
Tape, Insulation	OT-57CW	MMS-01-001 Type 1.	As Necessary	Code: C
Epoxy Adhesive	ATR 525 A/B	BAMS532-002 Type II	As Necessary	Code: D
Alcohol, Isopropyl	-	TT-I-735	As Necessary	Code: E
Paper, Abrasive	-	180-Grit	As Necessary	Code: E

NOTES: 1. Refer to the table that follows for each supplier's address listed by codes.

2. The Curing Time (CT), if applicable, for each consumable material is indicated with the description of each product.

3. At time of release of this Service Bulletin, the information on the supplier was valid and accurate. In the event that this information has changed, the operator is encouraged to use the World Wide Web to find a local supplier.

SUPPLIERS ADDRESSES BY CODES	
Code: A Lord Corporation World Headquarters 111 Lord Drive Cary, NC 27511-7923 U.S.A. Tel.: 1 877 275 5673 www.lord.com	**Code: B** 3M Center BLDG 251-3 St-Paul, MN, 55144-1000 U.S.A. Tel: 1-888-364-3577 www.3m.com
Code: C Orcon Corporation 1570 Atlantic Street Union City, California 94587-2040 USA Tel: 510-489-8100 www.orcon-aerospace.com	**Code: D** AAR Composites Inc. 14201 Myerlake Circ. Clearwater FL, 33760 USA Tel: 916-566-6014 www.aarcorp.com
Code: E Commercially Available	

D. Publications

The publication that follows is required after this Service Bulletin has been incorporated.

– Instruction for Continued Airworthiness (ICA), Water Tank Connection Heater and Baggage Compartment Heater Modification, Document Number BAS68058003 - ICA. Refer to Paragraph 1.K.

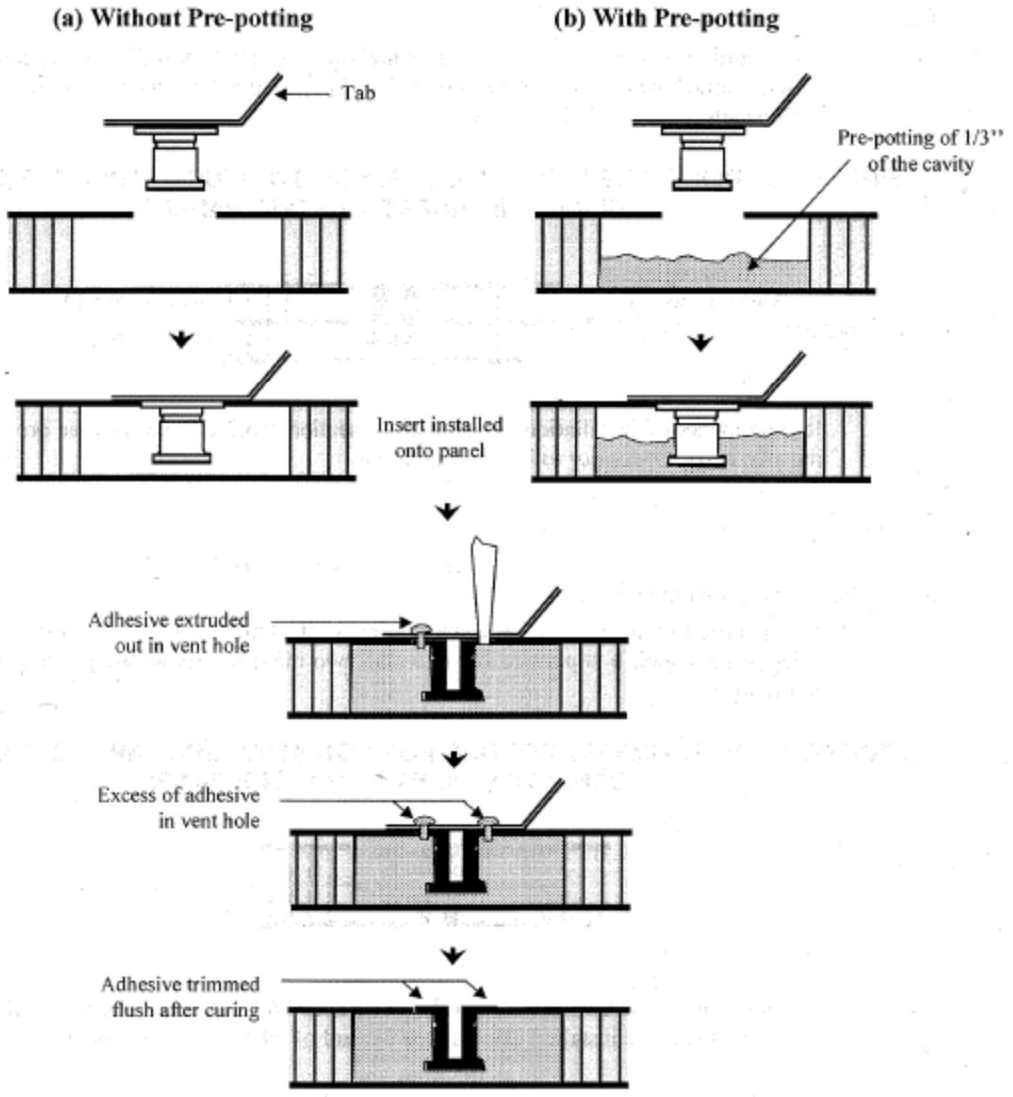

Figure 3 – Blind Insert Potting Installation

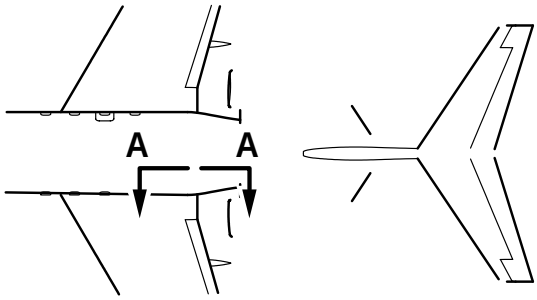

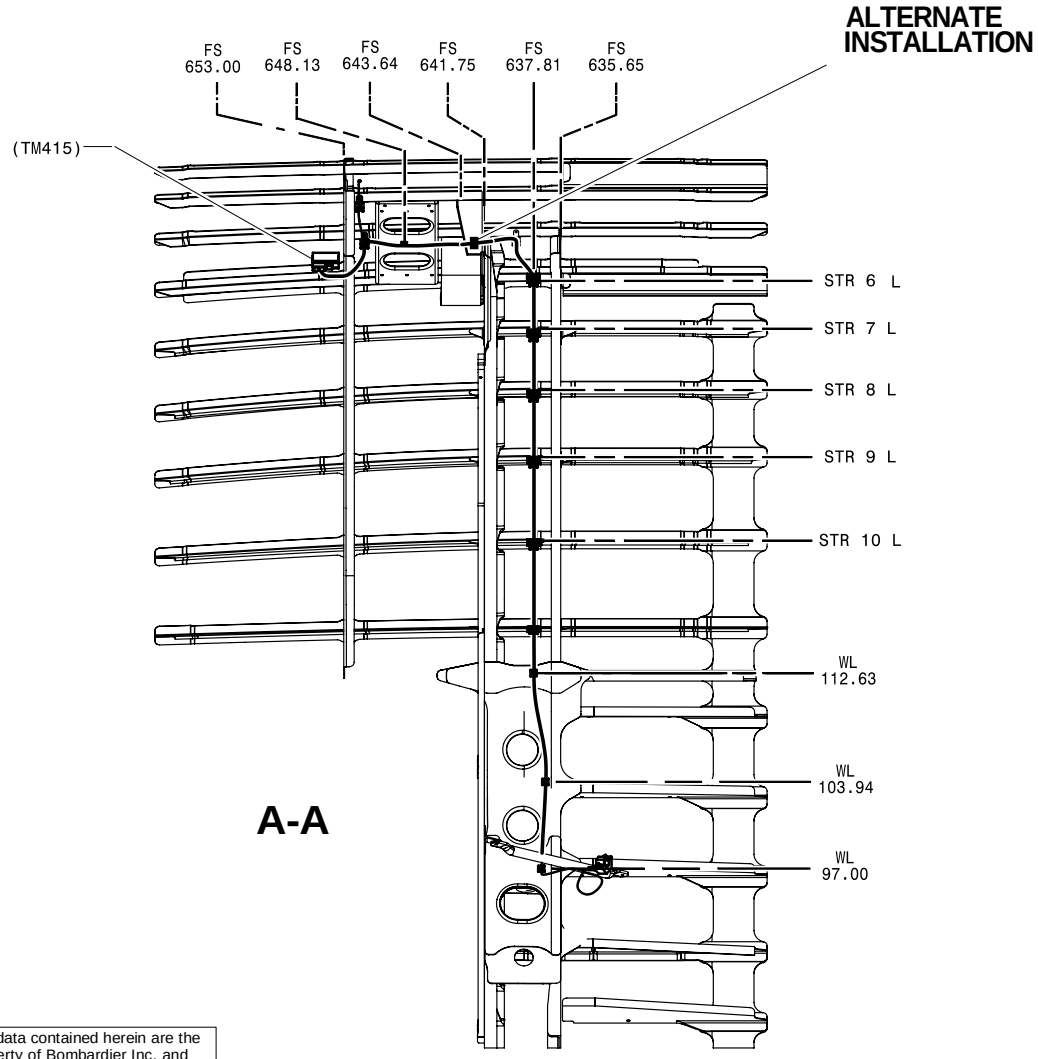

Drawings and data contained herein are the exclusive property of Bombardier Inc. and their copy or reproduction by any third party is strictly forbidden.

Figure 4 – Alternate Installation

GENERAL NOTES: UNLESS OTHERWISE SPECIFIED

1. NOT USED.
2. THE INTENT OF THIS DRAWING IS TO:
   INSTALL PLACARDS FOR BAGGAGE HEATERS.
3. PART NUMBER IDENTIFICATION PER BEST SHOP PRACTICE TO BE CARRIED OUT AFTER ALL MANUFACTURING PROCESSES USING INDELIBLE INK.
4. BOND ITEM 11 USING FASTBOND 30NF PER MANUFACTURER INSTRUCTIONS.
5. MANUFACTURER: BOMBARDIER INC.
   CAGE CODE: 3AB48

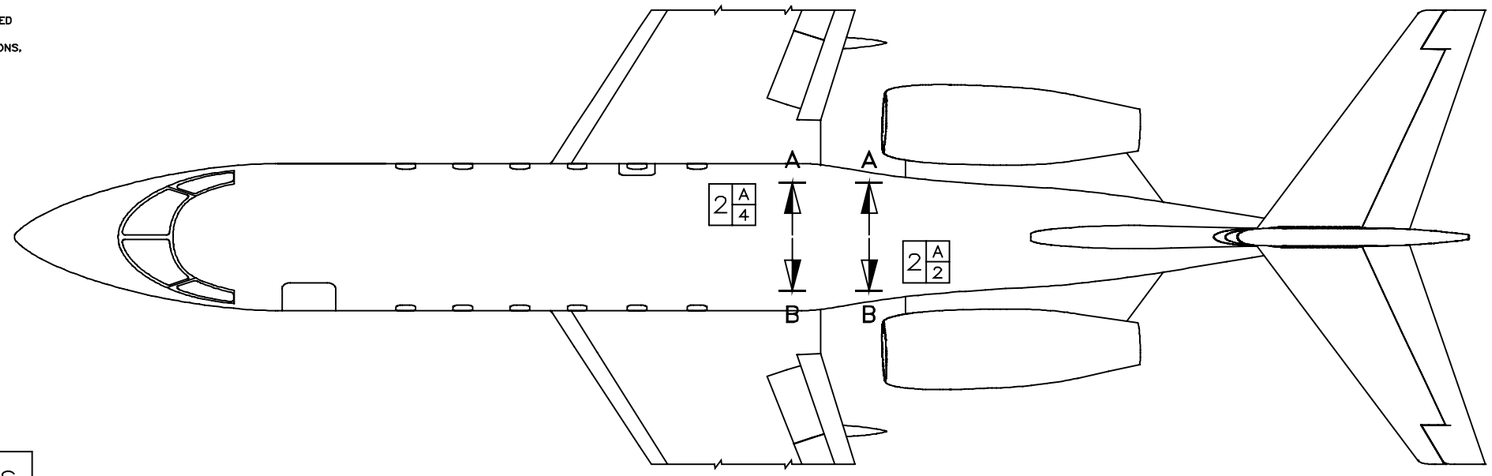

STANDARD MECHANICAL PRACTICES	AIRCRAFT MODEL
	CHALLENGER 300
CUTTING OF SHEET METAL	SRM 51-28-28
FORMING OF SHEET METAL	SRM 51-28-12
FINISH CODES	SRM 51-01-04
INSTALLATION OF SOLID RIVETS	SRM 51-42-08
INSTALLATION OF BLIND RIVETS	SRM 51-42-16
INSTALLATION OF BOLTS, SCREWS AND RELATED ITEMS	SRM 51-41-04
INSTALLATION OF PLUMBING LINES	AMM 20-22-00
INSTALLATION OF POTTED INSERTS	BAPS 730-006

BAS68038168-1 BAGGAGE HEATER PLACARD INSTL

QTY	ITEM	PART NUMBER	DESCRIPTION	MATERIAL	SPEC	SIZE/WGT/FINISH
2	11	604DX1131000-373-B-L	PICTOGRAM BAGGAGE/HEATER		5	
1	1	-1	BAGGAGE HEATER PLACARD INSTL			

REVISION		
A	SHEET 1: IN BOM, CHANGE P/N OF ITEM 11.	M.DESROCHES – 04 MAY 2011
REVISION RECORD		N.S.S.R.
		M.DESROCHES – 04 MAY 2011
		DRAWN / STRESS/ENG / APVD

PROPRIETARY INFORMATION: THE INFORMATION CONTAINED ON THIS DOCUMENT IS PROPRIETARY TO BOMBARDIER AEROSPACE OR ONE OF ITS COMPANIES OR DIVISIONS AND MAY NOT BE REPRODUCED IN WHOLE OR IN PART FOR ANY PURPOSE WITHOUT THE WRITTEN PERMISSION OF BOMBARDIER AEROSPACE OR ONE OF ITS COMPANIES OR DIVISIONS.
COPYRIGHT © 2002 BOMBARDIER INC.
CAGE CODE: 3AJ74

UNLESS OTHERWISE SPECIFIED DIMENSIONS ARE IN INCHES
LINEAR TOLERANCES: .XX = ±.03, .XXX = ± .010 | ANGULAR TOLERANCES: MACH. ± 0° 30' | FORMED ± 2°
LES XXXX = LEARJET ENGR SPEC
MPS XXX = CANADAIR MATERIALS AND PROCESSES SPECIFICATION
MPS XXXX = BCOM MATERIALS AND PROCESSES SPECIFICATION
S-XXX(X) = LEARJET ENGR STD
S-XXXX = CANADAIR EXTRUSION NO.
FINISH SPEC:
FINISH CODE:
ALL MACHINED SURFACES: 125

DRAWN:	M.DESROCHES	16 MAR 2011
CHECK:	E.BOUCHARD	16 MAR 2011
STRESS/ENG:	N.S.S.R.	16 MAR 2011
A/C LEAD:	M.SELINIOTAKIS	21 MAR 2011
GROUP LEAD:	J-F HAMEL	17 MAR 2011

BOMBARDIER AEROSPACE — Business Aircraft Services

BAGGAGE HEATER – PLACARDS – INSTALLATION

SIZE	DWG NO	REV
B	BAS68038168	A

MOD: 0050 | SCALE: NTS | SHEET: 1 OF 2

USERNAME: md003910 C:\Program Files (x86)\Motiva\Workspace\BAS68038168_NC.3_111230026_3\BAS68038168.dwg
PLOT TIME: 04 May 2011 – 08:38:44 INDEX: 2096240 REV: NC.3

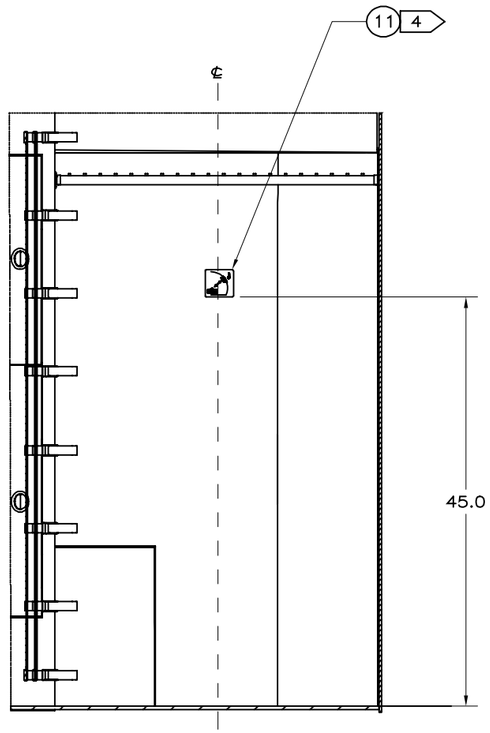

1 C 2 VIEW A–A
LOOKING OUTBD RH SIDE – BAGGAGE BAY
SCALE 1:5

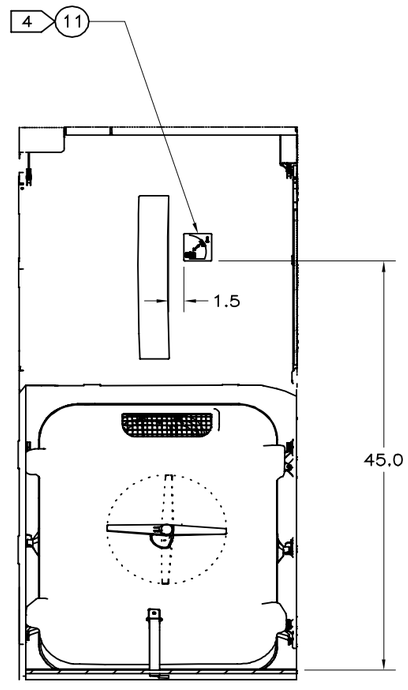

1 C 2 VIEW B–B
LOOKING OUTBD LH SIDE – BAGGAGE BAY
SCALE 1:5

BOMBARDIER AEROSPACE | Business Aircraft Services

BAGGAGE HEATER – PLACARDS – INSTALLATION

SIZE	DWG NO	REV
B	BAS68038168	A

SHEET: 2 OF 2

USERNAME: md003910 C:\Program Files (x86)\Motiva\Workspace\BAS68038168_NC.3_111230026_3\BAS68038168.dwg
PLOT TIME: 04 May 2011 – 08:38:44 INDEX: 2096240 REV: NC.3

GENERAL NOTES: UNLESS OTHERWISE SPECIFIED

1. NOT USED.
2. THE INTENT OF THIS DRAWING IS TO:
   INSTALL HEATER FOR THE WATER TANK CONNECTION.
3. PART NUMBER IDENTIFICATION PER BEST SHOP PRACTICE TO BE CARRIED OUT AFTER ALL MANUFACTURING PROCESSES USING INDELIBLE INK.
4. BOND ITEM 51, 52 & 53 USING LORD 201/19 ACRYLIC ADHESIVE PER STANDARD PRATICES MANUAL CHAPTER 51-21-67.
5. FOR ORDERING PURPOSES, REFER TO WIRING DIAGRAM BAS68028059 FOR PART NUMBER AND QUANTITY OF ELECTRICAL EQUIPMENT.
6. ATTACH WIRING TO SUPPORT ASSY (1005230111-007) PER CL300 WIRING MANUAL CHAPTER 20.
7. MANUFACTURER: PARKER-HANNIFIN CORPORATION
   CAGE CODE: 99321
8. MANUFACTURER: LORD CORPORATION
   CAGE CODE: 0Y5K6
9. USE EXISTING STANDOFF HARDWARE TO ATTACH WIRING.
10. IF AIRCRAFT CONFIGURATION IS DIFFERENT FROM THE ONE SHOWN BETWEEN FS 653 AND 643, ROUTE WIRING APPROXIMATELY AS SHOWN. IF DEVIATION IS REQUIRED, ROUTE WIRING IN ACCORDANCE WITH SPM 20-12-00, WIRING MAINTENANCE PRACTICES.

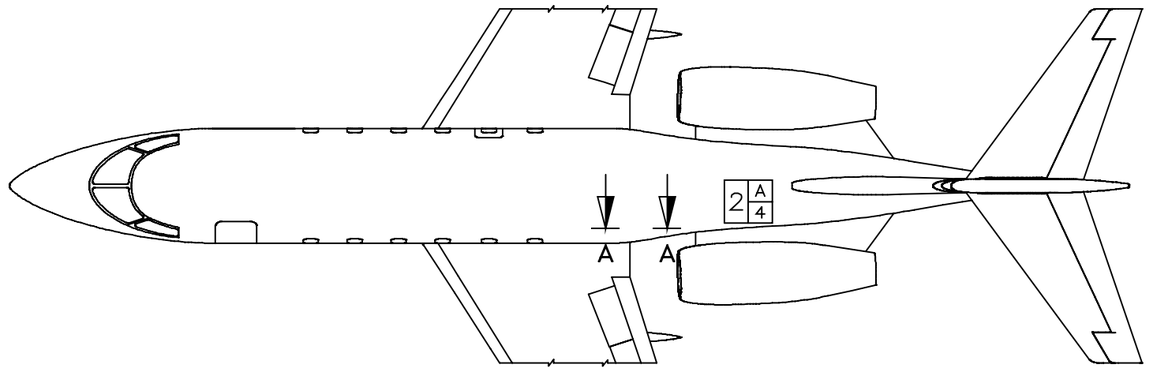

BAS68038169-1 WATER TANK HEATER INSTALLATION

STANDARD MECHANICAL PRACTICES	AIRCRAFT MODEL
	CHALLENGER 300
CUTTING OF SHEET METAL	SRM 51-28-28
FORMING OF SHEET METAL	SRM 51-28-12
FINISH CODES	SRM 51-01-04
INSTALLATION OF SOLID RIVETS	SRM 51-42-08
INSTALLATION OF BLIND RIVETS	SRM 51-42-16
INSTALLATION OF BOLTS, SCREWS AND RELATED ITEMS	SRM 51-41-04
INSTALLATION OF PLUMBING LINES	AMM 20-22-00
INSTALLATION OF POTTED INSERTS	BAPS 730-006

QTY	ITEM	PART NUMBER	DESCRIPTION	MATERIAL	SPEC	SIZE/WGT/FINISH
AR	100	LORD 201/19	ACRYLIC ADHESIVE		8	
1	53	ALBCBS-310-59-1	BRACKET HARNESS SUPPORT			
5	52	ALBCBS-304-59-01	CLIP HARNESS SUPPORT			
5	51	ABM1M-AT	BASE MOUNTING 4 WAY			
5 (1)	11	325-0296-01	HEATER, TUBE COUPLING NUT		7	
1	-1		WATER TANK HEATER INSTALLATION			

REVISION		
A	SHT 1: NOTE 10 ADDED. SHT 2: VIEW A-A, NOTE 10 ADDED	REVISION RECORD
	P.GIGUERE - 2013-01-18	DRAWN
	N.S.S.R.	STRESS/ENG
	C.WATSON - 2013-01-18	APVD

PROPRIETARY INFORMATION: THE INFORMATION CONTAINED ON THIS DOCUMENT IS PROPRIETARY TO BOMBARDIER AEROSPACE OR ONE OF ITS COMPANIES OR DIVISIONS AND MAY NOT BE REPRODUCED IN WHOLE OR IN PART FOR ANY PURPOSE WITHOUT THE WRITTEN PERMISSION OF BOMBARDIER AEROSPACE OR ONE OF ITS COMPANIES OR DIVISIONS.
COPYRIGHT © 2002 BOMBARDIER INC.
CAGE CODE: 3AJ74

UNLESS OTHERWISE SPECIFIED DIMENSIONS ARE IN INCHES
LINEAR TOLERANCES .XX = ±.03 .XXX = ± .010 | ANGULAR TOLERANCES MACH. ± 0° 30' FORMED ± 2°
LES XXXX = LEARJET ENGR SPEC
MPS XXX = CANADAIR MATERIALS AND PROCESSES SPECIFICATION
MPS XXXX = BCCM MATERIALS AND PROCESSES SPECIFICATION
S-XXX(X) = LEARJET ENGR STD
S-XXXX = CANADAIR EXTRUSION NO.
FINISH SPEC:
FINISH CODE:
ALL MACHINED SURFACES: 125

DRAWN:	M.DESROCHES	16 MAR 2011
CHECK:	E.BOUCHARD	16 MAR 2011
STRESS/ENG:	N.S.S.R.	16 MAR 2011
A/C LEAD:	M.SELINIOTAKIS	16 MAR 2011
GROUP LEAD:	J-F HAMEL	17 MAR 2011

BOMBARDIER AEROSPACE Business Aircraft Services

WATER TANK - HEATER - INSTALLATION

SIZE	DWG NO	REV
B	BAS68038169	A

MOD: 3032 | SCALE: NTS | SHEET: 1 OF 2

USERNAME: MD003910 C:\Program Files\Motiva\Workspace\BAS68038169_NB.3_1\0700040_3\BAS68038169.dwg
PLOT TIME: 16 Mar 2011 - 14:04:42 INDEX: 9701245 REV: NB.3

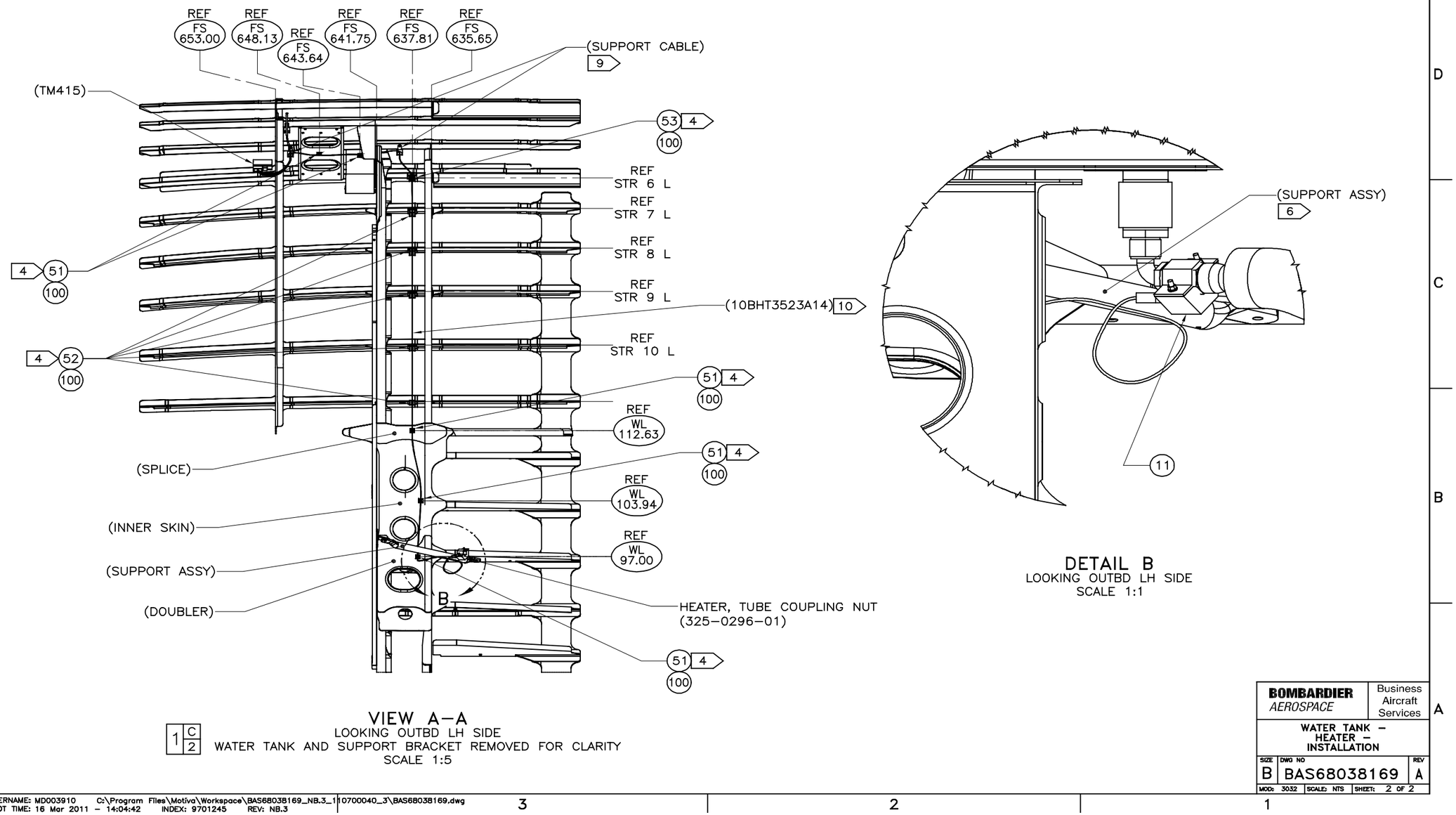

VIEW A–A
LOOKING OUTBD LH SIDE
WATER TANK AND SUPPORT BRACKET REMOVED FOR CLARITY
SCALE 1:5

1 C 2

DETAIL B
LOOKING OUTBD LH SIDE
SCALE 1:1

BOMBARDIER AEROSPACE | Business Aircraft Services

WATER TANK – HEATER – INSTALLATION

SIZE	DWG NO	REV
B	BAS68038169	A

MOD: 3032 | SCALE: NTS | SHEET: 2 OF 2

USERNAME: MD003910 C:\Program Files\Motiva\Workspace\BAS68038169_NB.3_110700040_3\BAS68038169.dwg
PLOT TIME: 16 Mar 2011 – 14:04:42 INDEX: 9701245 REV: NB.3

BAS68038169 – Water Tank – Heater Installation
(Sheet 2 of 2, Rev. A)

GENERAL NOTES: UNLESS OTHERWISE SPECIFIED

1. NOT USED.
2. THE INTENT OF THIS DRAWING IS TO:
   INSTALL SPACERS BETWEEN THE LH SIDEWALL PANEL AND THE PANEL HEATER FOR AIRCRAFT EQUIPPED WITH AN FACC INTERIOR.
3. PART NUMBER IDENTIFICATION PER BEST SHOP PRACTICE TO BE CARRIED OUT AFTER ALL MANUFACTURING PROCESSES USING INDELIBLE INK.
4. BOND ITEM 12 TO LH SIDEWALL PANEL OR PANEL DOUBLER, USING DP-460 EPOXY ADHESIVE (3M) PER MANUFACTURER INSTRUCTIONS.
5. LOCATE ITEM 12 ON LH SIDEWALL AND PANEL DOUBLER APPROXIMATELY AS SHOWN.
6. MANUFACTURER: FACC
   CAGE CODE: 0278N
7. MANUFACTURER: 3M CO.
   CAGE CODE: 52152
8. MANUFACTURER: AAR COMPOSITES.
   CAGE CODE: 9X645
9. IF THE PANEL HEATER IS INSTALLED ON THE SIDEWALL WITHOUT SCREWS, FIRST, MARK THE PANEL HEATER POSITION ON THE SIDEWALL PANEL BEFORE REMOVAL. THEN REMOVE THE PANEL HEATER. CLEAN THE SURFACES BY USING CHALLENGER 300 SPM TASK 51-25-00-110-801. DRILL HOLES ON THE PANEL HEATER AS PER DETAIL B ON SHT 2. LOCATE THE INSERTS ON SIDEWALL PANEL (253-11503-112) IN CONJUNCTION WITH THE PANEL HEATER HOLES. INSTALL POTTED INSERT USING SERVICE BULLETIN 100-25-35.

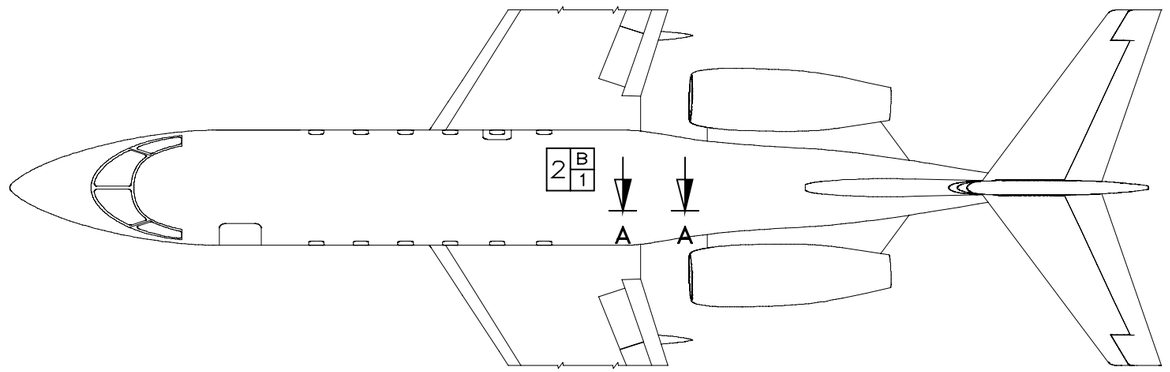

BAS68038170-1 LH SIDEWALL PANEL MODIFICATION

STANDARD MECHANICAL PRACTICES

	AIRCRAFT MODEL
	CHALLENGER 300
CUTTING OF SHEET METAL	SRM 51-28-28
FORMING OF SHEET METAL	SRM 51-28-12
FINISH CODES	SRM 51-01-04
INSTALLATION OF SOLID RIVETS	SRM 51-42-08
INSTALLATION OF BLIND RIVETS	SRM 51-42-16
INSTALLATION OF BOLTS, SCREWS AND RELATED ITEMS	SRM 51-41-04
INSTALLATION OF PLUMBING LINES	AMM 20-22-00
INSTALLATION OF POTTED INSERTS	BAPS 730-006

QTY	ITEM	PART NUMBER	DESCRIPTION	MATERIAL	SPEC	SIZE/WGT/FINISH
AR	101	ATR 525 A/B	EPOXY ADHESIVE		8	
AR	100	DP-460	EPOXY ADHESIVE		7	
6	53	NAS1836-06-07	INSERT			
6	52	NAS1149GN632P	WASHER			
6	51	MS35206-228	SCREW			
16	12	253-44020-060	FELT SPACER		6	
6	11	253-44020-061	FELT SPACER		6	
1	1	-1	LH SIDEWALL PANEL MODIFICATION			
-1						

REVISION			
C	SHT1: ADD NOTE 8 AND 9. SHT1: ADD ITEM 101 & 53. SHT2: DETAIL B, ADD INSERTS MEASUREMENTS FROM THE PANEL HEATER. SHT2: UP-DATE SECTION C-C	P. GIGUERE 16 JAN 2013	NSSR
B	ALL SHTS: CHANGE DRAWING NAME FROM "LH BAGGAGE HEATER INSTALLATION" TO "LH SIDEWALL PANEL MODIFICATION".	P. LAFLAMME 06 JUL 2012	NSSR
A	SHT 2: PANEL HEATER REFERENCED PART NUMBER WAS 3436-06.	P. GIGUERE 23 APR 2012	NSSR
REVISION RECORD ◀	DRAWN	STRESS/ENG	APVD
	C. WATSON 16 JAN 2013	C. WATSON 09 JUL 2012	C. WATSON 11 JUN 2012

PROPRIETARY INFORMATION: THE INFORMATION CONTAINED ON THIS DOCUMENT IS PROPRIETARY TO BOMBARDIER AEROSPACE OR ONE OF ITS COMPANIES OR DIVISIONS AND MAY NOT BE REPRODUCED IN WHOLE OR IN PART FOR ANY PURPOSE WITHOUT THE WRITTEN PERMISSION OF BOMBARDIER AEROSPACE OR ONE OF ITS COMPANIES OR DIVISIONS.

COPYRIGHT © 2002 BOMBARDIER INC.

CAGE CODE: 3AJ74

UNLESS OTHERWISE SPECIFIED DIMENSIONS ARE IN INCHES
LINEAR TOLERANCES .XX = ±.03 .XXX = ± .010 ANGULAR TOLERANCES MACH. ± 0° 30' FORMED ± 2°

LES XXXX = LEARJET ENGR SPEC
MPS XXX = CANADAIR MATERIALS AND PROCESSES SPECIFICATION
MPS XXXX = BCCM MATERIALS AND PROCESSES SPECIFICATION
S-XXX(X) = LEARJET ENGR STD
S-XXXX = CANADAIR EXTRUSION NO.

FINISH SPEC:
FINISH CODE:
ALL MACHINED SURFACES: 125

DRAWN: M.DESROCHES	16 MAR 2011	
CHECK: E.BOUCHARD	16 MAR 2011	
STRESS/ENG: N.S.S.R.	16 MAR 2011	
A/C LEAD: M.SELINIOTAKIS	21 MAR 2011	
GROUP LEAD: J-F HAMEL	17 MAR 2011	

BOMBARDIER AEROSPACE Business Aircraft Services

LH SIDEWALL PANEL MODIFICATION

SIZE	DWG NO	REV
B	BAS68038170	C

MOD: 3032 SCALE: NTS SHEET: 1 OF 2

USERNAME:
PLOT TIME:

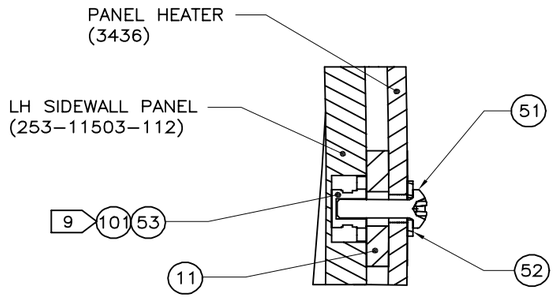

SECTION C–C
TYPICAL 6 PL
SCALE 4:1

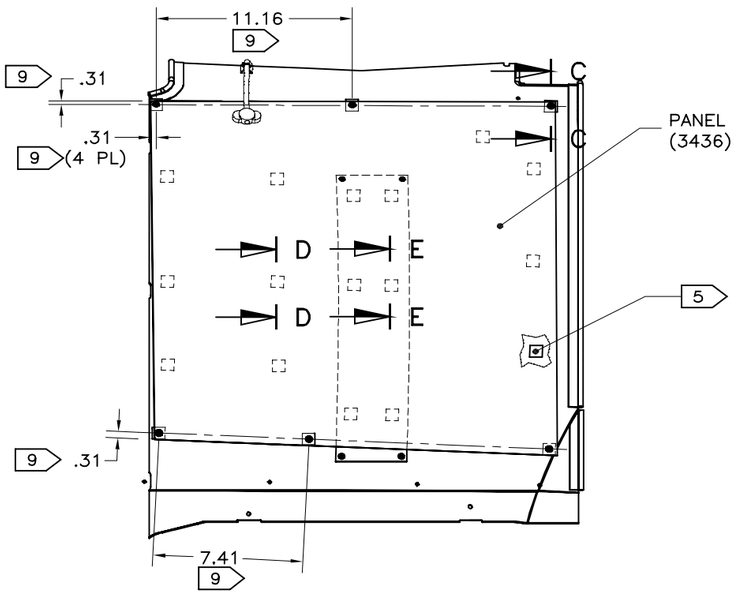

DETAIL B
LKG INDB AT SIDEWALL PANEL – HEATER ASSY
SCALE 2:1

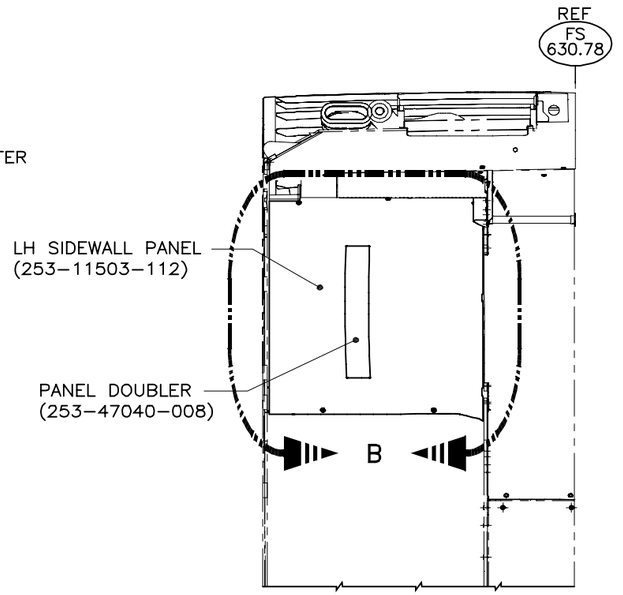

1 D 2

VIEW A–A
LKG OUTBOARD AT LH SIDEWALL
VIEW ROTATED 180°
SCALE 1:1

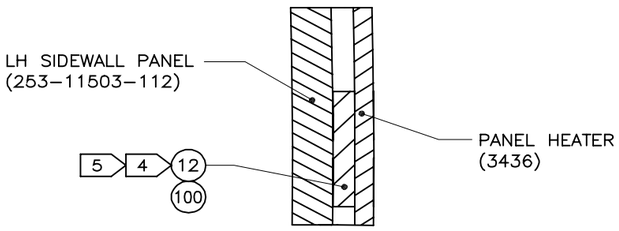

SECTION D–D
TYPICAL 10 PL
SCALE 4:1

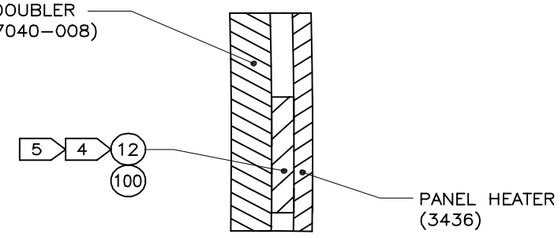

SECTION E–E
TYPICAL 6 PL
SCALE 4:1

BOMBARDIER AEROSPACE | Business Aircraft Services

LH SIDEWALL PANEL MODIFICATION

SIZE	DWG NO	REV
B	BAS68038170	C

MOD: 30.32 | SCALE: NOTED | SHEET: 2 OF 2

USERNAME:
PLOT TIME:

BAS68038170 – LH Sidewall Panel – Modification
(Sheet 2 of 2, Rev. C)

GENERAL NOTES: UNLESS OTHERWISE SPECIFIED

1. NOT USED.
2. THE INTENT OF THIS DRAWING IS TO:
   INSTALL SPACERS BETWEEN THE LH SIDEWALL PANEL AND THE PANEL HEATER FOR AIRCRAFT EQUIPPED WITH A PPI INTERIOR.
3. PART NUMBER IDENTIFICATION PER BEST SHOP PRACTICE TO BE CARRIED OUT AFTER ALL MANUFACTURING PROCESSES USING INDELIBLE INK.
4. BOND ITEM 12 TO LH SIDEWALL PANEL OR PANEL DOUBLER, USING DP-460 EPOXY ADHESIVE (3M) PER MANUFACTURER INSTRUCTIONS.
5. LOCATE ITEM 12 ON LH SIDEWALL AND PANEL DOUBLER APPROXIMATELY AS SHOWN.
6. MANUFACTURER: FACC
   CAGE CODE: 0278N
7. MANUFACTURER: 3M CO.
   CAGE CODE: 52152

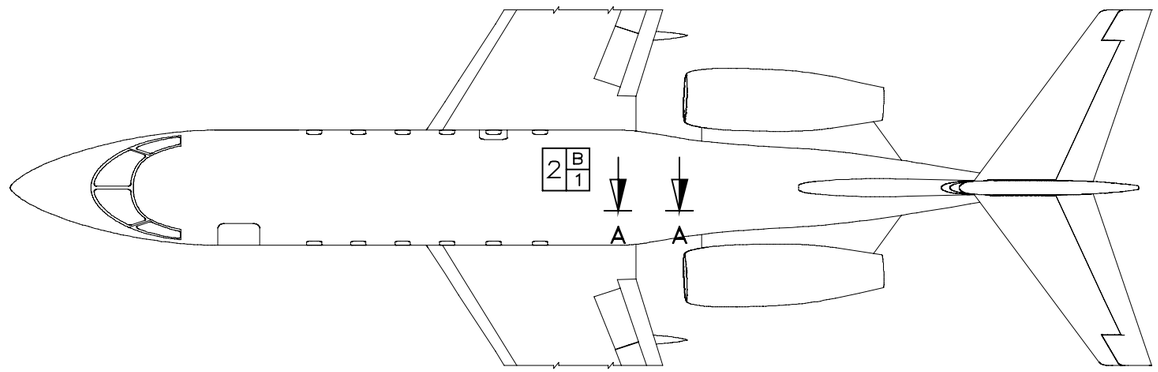

BAS68038171-1 LH SIDEWALL PANEL MODIFICATION

STANDARD MECHANICAL PRACTICES	AIRCRAFT MODEL
	CHALLENGER 300
CUTTING OF SHEET METAL	SRM 51-28-25
FORMING OF SHEET METAL	SRM 51-28-12
FINISH CODES	SRM 51-01-04
INSTALLATION OF SOLID RIVETS	SRM 51-42-08
INSTALLATION OF BLIND RIVETS	SRM 51-42-16
INSTALLATION OF BOLTS, SCREWS AND RELATED ITEMS	SRM 51-41-04
INSTALLATION OF PLUMBING LINES	AMM 20-22-00
INSTALLATION OF POTTED INSERTS	BAPS 730-006

ITEM	PART NUMBER	DESCRIPTION	MATERIAL	SPEC	SIZE/WGT/FINISH
AR	100	DP-460	EPOXY ADHESIVE		7
6	52	NAS1149GN832P	WASHER		
6	51	MS35206-243	SCREW		
16	12	253-44020-060	FELT SPACER		6
6	11	253-44020-061	FELT SPACER		6
	1	-1	LH SIDEWALL PANEL MODIFICATION		
-1 QTY					

REVISION		
B	ALL SHTS: CHANGE DRAWING NAME FROM "LH BAGGAGE HEATER INSTALLATION" TO "LH SIDEWALL PANEL MODIFICATION"	P. LAFLAMME 06 JUL 2012
A	SHT 2: PANEL HEATER REFERENCED PART NUMBER WAS 3436-06.	P. GIGUERE 23 APR 2012
REVISION RECORD ◀	DRAWN	NSSR
STRESS/ENG	NSSR	C. WATSON 11 JUN 2012
APVD	C. WATSON 09 JUL 2012	

PROPRIETARY INFORMATION: THE INFORMATION CONTAINED ON THIS DOCUMENT IS PROPRIETARY TO BOMBARDIER AEROSPACE OR ONE OF ITS COMPANIES OR DIVISIONS AND MAY NOT BE REPRODUCED IN WHOLE OR IN PART FOR ANY PURPOSE WITHOUT THE WRITTEN PERMISSION OF BOMBARDIER AEROSPACE OR ONE OF ITS COMPANIES OR DIVISIONS.
COPYRIGHT © 2002 BOMBARDIER INC.
CAGE CODE: 3AJ74

UNLESS OTHERWISE SPECIFIED DIMENSIONS ARE IN INCHES
LINEAR TOLERANCES: .XX = ±.03, .XXX = ± .010
ANGULAR TOLERANCES: MACH. ± 0° 30', FORMED ± 2°
LES XXXX = LEARJET ENGR SPEC
MPS XXX = CANADAIR MATERIALS AND PROCESSES SPECIFICATION
MPS XXXX = BCCM MATERIALS AND PROCESSES SPECIFICATION
S-XXX(X) = LEARJET ENGR STD
S-XXXX = CANADAIR EXTRUSION NO.
FINISH SPEC:
FINISH CODE:
ALL MACHINED SURFACES: 125

DRAWN:	M.DESROCHES	16 MAR 2011
CHECK:	E.BOUCHARD	16 MAR 2011
STRESS/ENG:	N.S.S.R.	16 MAR 2011
A/C LEAD:	M.SELINIOTAKIS	16 MAR 2011
GROUP LEAD:	J-F HAMEL	17 MAR 2011

BOMBARDIER AEROSPACE — Business Aircraft Services

LH SIDEWALL PANEL MODIFICATION

SIZE	DWG NO	REV
B	BAS68038171	B

MOD: 3032 | SCALE: NTS | SHEET: 1 OF 2

USERNAME: eb006355 C:\Program Files (x86)\Motiva\Workspace\BAS68038171_NC.1_120880073_1\BAS68038171.dwg
PLOT TIME: 23 Apr 2012 - 08:49:05 INDEX:733 BAS6 REV: NC.1

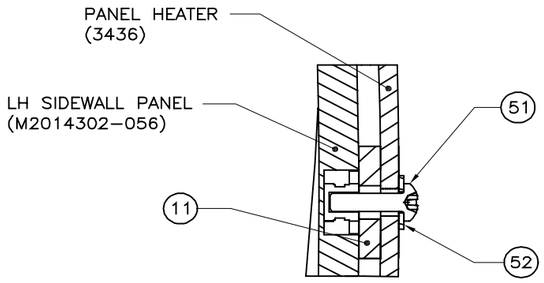

SECTION C–C
TYPICAL 6 PL
SCALE 4:1

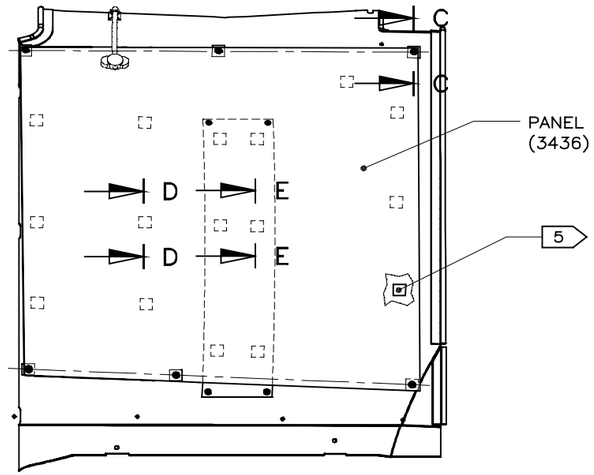

DETAIL B
LKG INDB AT SIDEWALL PANEL – HEATER ASSY
SCALE 2:1

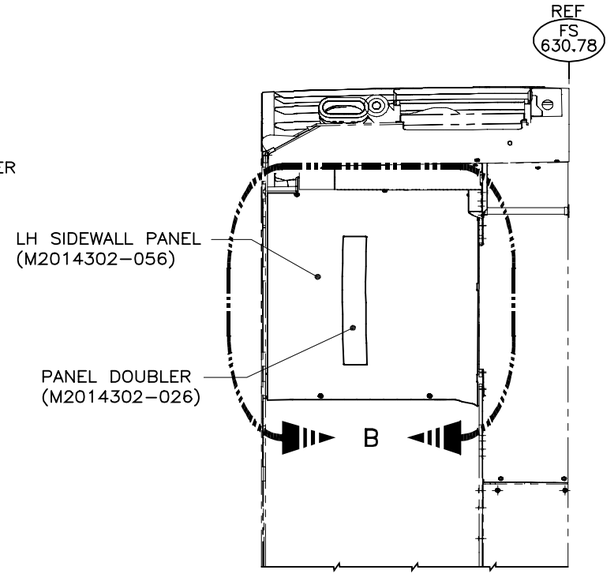

1 D 2

VIEW A–A
LKG OUTBOARD AT LH SIDEWALL
VIEW ROTATED 180°
SCALE 1:1

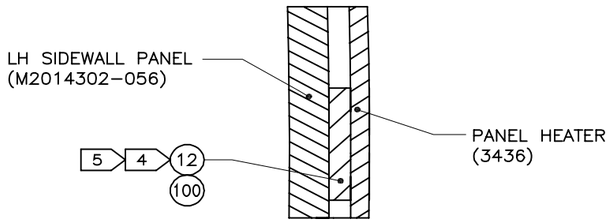

SECTION D–D
TYPICAL 10 PL
SCALE 4:1

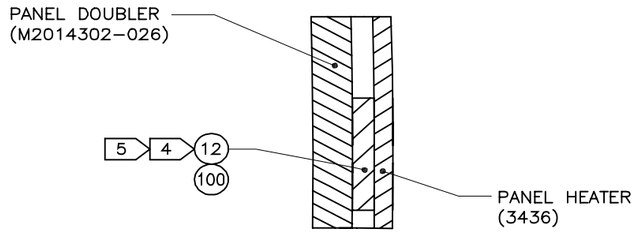

SECTION E–E
TYPICAL 6 PL
SCALE 4:1

BOMBARDIER AEROSPACE	Business Aircraft Services
LH SIDEWALL PANEL MODIFICATION	
SIZE: B	DWG NO: BAS68038171	REV: B
MOD: 30332	SCALE: NTS	SHEET: 2 OF 2

USERNAME: eb006355 C:\Program Files (x86)\Motiva\Workspace\BAS68038171_NC.1_120880073_1\BAS68038171.dwg
PLOT TIME: 23 Apr 2012 – 08:49:05 INDEX:733 BAS6 REV: NC.1

BAS68038171 – LH Sidewall Panel – Modification
(Sheet 2 of 2, Rev. B)

GENERAL NOTES: UNLESS OTHERWISE SPECIFIED

1. INSTALL IAW STANDARD PRACTICES MANUAL, CHAPTER 20 – STANDARD PRACTICES – WIRING.
2. WIRE TYPE IAW MIL–W–22759/34, SHIELDED AND/OR TWISTED CABLE IAW MIL–C–27500 AND COAXIAL CABLE IAW MIL–C–17.
3. ALL INSTALLED WIRE TO BE 20 AWG UNLESS OTHERWISE SPECIFIED AND EMC WIRE CODING: No 1 SYSTEMS AND No 2 SYSTEMS SHALL BE ROUTED SEPARATELY. IN ADDITION, AC (MARKED *), AUDIO (MARKED **), DATA BUS 1 AND 2 (MARKED # OR ##), HIGH POWER DC (MARKED !!!) AND COAXIAL CABLES SHALL BE ROUTED SEPARATELY.
4. – – – – – INDICATES EXISTING WIRE OR COMPONENT OR REROUTED WIRING.
   ~~~~~~~ INDICATES EQUIPMENT OR WIRES TO BE DELETED.
   ——— INDICATES NEW.
   ⏚—— OR ⏚– – – INDICATES CAP AND STOW WIRE.
   ⊛ INDICATES VENDOR–SUPPLIED EQUIPMENT.
5. THE INTENT OF THIS DRAWING IS TO CONNECT THE BAGGAGE HEATERS IN SERIES AND ADD A HEATER UNDER THE WATER TANK.
6. POWER REQUIREMENTS FOR LOAD ANALYSIS: REMOVE 501 WATTS (18A) FROM 28VDC R AUX BUS.
7. THIS MODIFICATION IS SUBJECT TO TRANSPORT CANADA APPROVAL AND IS RELATED TO AD CF–2009–38.
8. AFTER INSTALLATION, VERIFY OPERATION PER SMM DOCUMENT BAS68058003, CHAPTER 21–42 TASK "OPERATIONAL TEST OF THE BAGGAGE COMPARTMENT HEAT MODIFICATION".
9. REFERENCE BOMBARDIER AEROSPACE DRAWING HW21445XXX, "WD BAGGAGE HEAT".
10. REWIRE AS SHOWN.
11. REMOVE AND DISCARD GROUND WIRE FBH5385N–14 FROM TM418.
12. DELETED.
13. DELETED.
14. DELETED.
15. REWORK EXISTING HEATER P/N 3436–06 TO NEW P/N 3436–07.
    – P/N 3436–06 MAY ALSO BE REFERED TO AS 3436–06–I/O OR 3436–06–1/0.
    – P/N 3436–07 MAY ALSO BE REFERED TO AS 3436–07–I/O OR 3436–07–1/0.
16. PANEL HEATER AND TUBE COUPLING NUT HEATHER ARE SUPPLIED WITH 36 INCHES LEADWIRES.
17. REFERENCE BOMBARDIER AEROSPACE DRAWING BAS6803817X, "LH BAGGAGE HEATHER INSTALLATION" FOR MECHANICAL INSTALLATION.

ITEM	PART NUMBER	DESCRIPTION	MATERIAL	SPEC	SIZE/WGT/FINISH
QTY					
–1	–1	INSTL			
15	3436–07	PANEL HEATER	M/F 3436–06	COX AND COMPANY	
	HFA–R	FUSE HOLDER, IN–LINE		COOPER BUSSMANN	1/4"x 1–1/4"
	MDA–5–R	FUSE, IN–LINE 5A		COOPER BUSSMAN	1/4"x 1–1/4"
	M81824/1–2	SPLICE, CRIMP BLUE		QPL	
	325–0296–01	HEATER, CLAMP B–NUT, 3W		SHAW AERO DEVICES	
	MS25036–108	LUG, TERMINAL #10		QPL	16–24 AWG
	M39029/22–605	CONTACT #12		QPL	
	–1	INSTL			
2	M39029/22–191	CONTACT, SOCKET		QPL	#22

REVISION					
F	SHT 1: – NOTE 8 AND FLAG NOTE 15 MODIFIED. – UPDATED BOM ITEM 17 P/N.	REVISION RECORD ◄			
	P. LAFLAMME 08 JANUARY 2013	DRAWN			
	NSSR	STRESS/ENG			
	C. WATSON 08 JANUARY 2013	APVD			
REVISION	A	B	C	D	E
REVISION RECORD ◄	SHT 1: – FLAG NOTES 11 AND 13 MODIFIED. – FLAG NOTE 14 ADDED. – ITEMS 15 AND 16 ADDED TO BOM. SHT 2: – ITEMS 15 AND 16 AND FLAG NOTE 14 ADDED.	SHT 1: NOTE 7 UPDATED.	SHT 1: –MODIFY NOTE 8. DELETE FLAG NOTES 12, 13 & 14. ADD FLAG NOTES 15 AND 16. –IN BOM, CHANGE QTY ITEM 10. REMOVE ITEM 14. MODIFY P/N ITEMS 13, 15 AND 16 AND ADD ITEM 17. SHT 2: –EXISTING LH BAGGAGE HEATER REPLACED WITH NEW ONE. –SEVERAL MISC. CHANGES.	–SHT 1: MODIFY NOTE 15, UPDATE BOM ITEM 17.	–SHT 1: MODIFY NOTE 15, UPDATE BOM ITEM 17.
DRAWN	C. HILARIO 15 MAY 2011	M. DESROCHES 1 SEP 2011	P. LAFLAMME 19 APR 2012	P. LAFLAMME 21 JUNE 2012	P. LAFLAMME 10 JULY 2012
STRESS/ENG	NSSR	NSSR	NSSR	NSSR	NSSR
APVD	M. SELINIOTAKIS 17 MAY 2011	C. HILARIO 1 SEP 2011	C. WATSON 20 APR 2012	C. WATSON 21 JUNE 2012	C. WATSON 10 JULY 2012

PROPRIETARY INFORMATION: THE INFORMATION CONTAINED ON THIS DOCUMENT IS PROPRIETARY TO BOMBARDIER AEROSPACE OR ONE OF ITS COMPANIES OR DIVISIONS AND MAY NOT BE REPRODUCED IN WHOLE OR IN PART FOR ANY PURPOSE WITHOUT THE WRITTEN PERMISSION OF BOMBARDIER AEROSPACE OR ONE OF ITS COMPANIES OR DIVISIONS.

COPYRIGHT © 2002 BOMBARDIER INC.

CODE IDENT: 24210

UNLESS OTHERWISE SPECIFIED DIMENSIONS ARE IN INCHES
LINEAR TOLERANCES , ANGULAR TOLERANCES
.XX = ±.03 .XXX = ± .010 | MACH. ± 0° 30' | FORMED ± 2°

LES XXXX = LEARJET ENGR SPEC
MPS XXX = CANADAIR MATERIALS AND PROCESSES SPECIFICATION
MPS XXXX = BCCM MATERIALS AND PROCESSES SPECIFICATION
S–XXX(X) = LEARJET ENGR STD
S–XXXX = CANADAIR EXTRUSION NO.

FINISH SPEC:
FINISH CODE:
ALL MACHINED SURFACES: 125

DRAWN:	C. HILARIO	29.APR.11
CHECK:	F. RIENDEAU	29.APR.11
STRESS/ENG:	NSSR	
A/C LEAD:	M. SELINIOTAKIS	29.APR.11
GROUP LEAD:	D. GEORGE	29.APR.11

BOMBARDIER *AEROSPACE* Business Aircraft Services

WD – BAGGAGE HEAT WIRING MODIFICATION

SIZE	DWG NO	REV
B	BAS68028059	F

MOD: 1001 | SCALE: NTS | SHEET: 1 OF 2

USERNAME:
PLOT TIME:
   ~~~~~~~

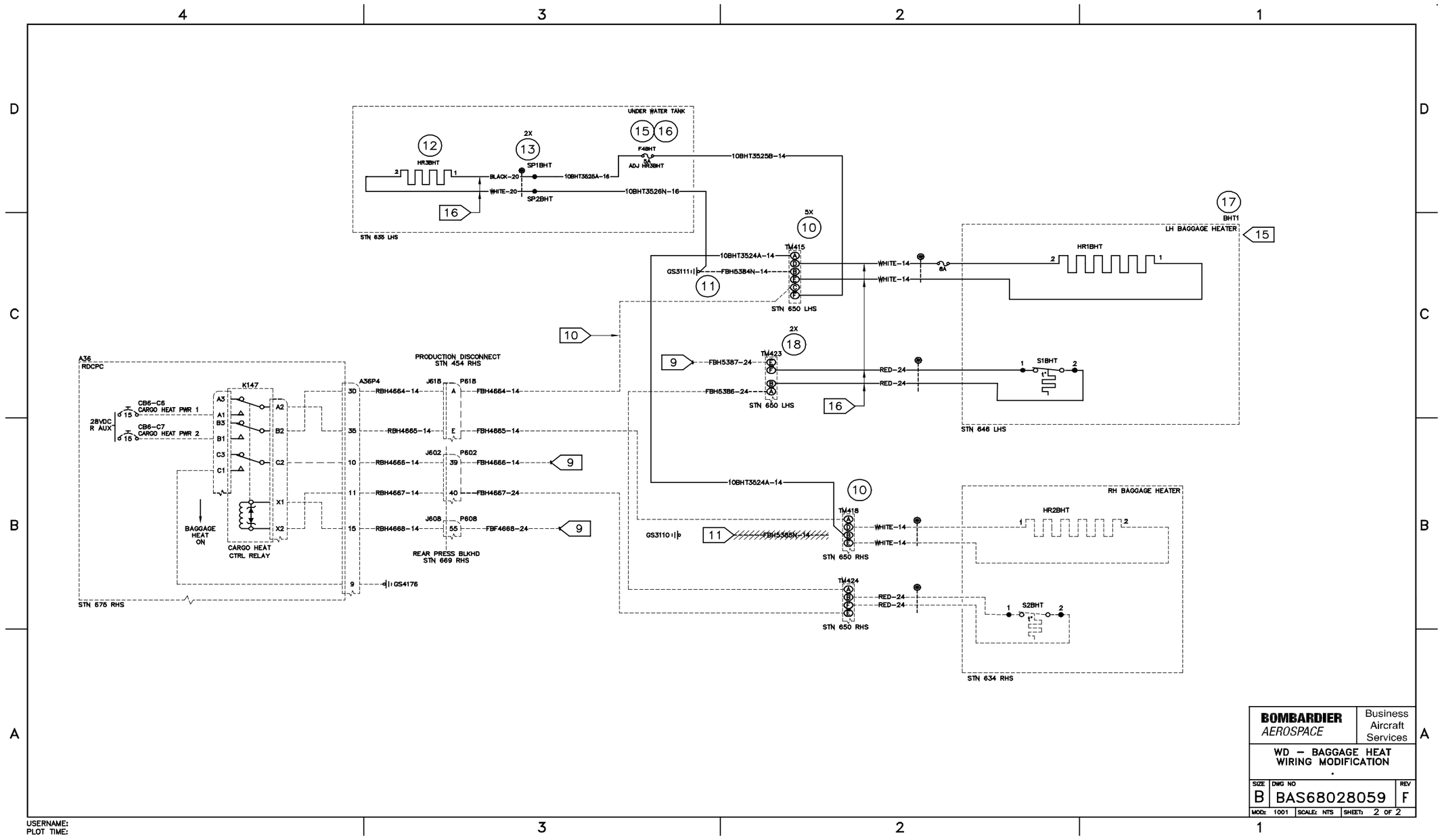

BAS68028059 – WD – Baggage Heat Wiring Modification
(Sheet 2 of 2, Rev. F)

SERVICE BULLETIN EVALUATION FORM

(Your ideas will help us provide better bulletins)

SERVICE BULLETIN:	100-25-35	ISSUE:	Rev. 02	DATED:	Jan 11/2016

TITLE: Modification – Baggage Compartment – Modification to the LH & RH Baggage Bay Heater Installations and Reactivation of the LH Baggage Bay Heater After Modification and Re-identification as Part No. 3436-07

In an effort to improve the quality of our technical communications, we are replacing the standard **Service Bulletin Evaluation Form** with an on-line **Service Bulletin Survey** and we are requesting your feedback. Please take a moment to fill out our easy on-line Service Bulletin survey:

http://csefeedback.aero.bombardier.com

SERVICE BULLETIN INCORPORATION SHEET – "100-25-35"

BOMBARDIER SUBMISSION	Upon completion of the Service Bulletin, please fill-in, fax to (514) 855-8798 or e-mail to Fracas at fracas.montreal@aero.bombardier.com **If your aircraft is registered on CAMP and you are reporting to them, please do not send the incorporation sheet to Bombardier.** If your aircraft is on another tracking system, please contact Bombardier to make arrangements for automated data submission.

Service Bulletin Number	Rev.	* Parts Completed	COMPLIED WITH YES	NO	N/A	Remarks/Reason
100-25-35	02	-	☐	☐	☐	
-	-	-	☐	☐	☐	
-	-	-	☐	☐	☐	

Actual hours to accomplish Service Bulletin: _____

* NOTES:

1. Where the Service Bulletin is divided into a number of parts (e.g., PARTS A, B, C, D, etc.) which can be carried out separately, indicate only those parts completed at this time.

2. For repetitive checks (usually PART A) only the initial check should be reported unless otherwise stated in the Service Bulletin.

3. When more than one part is carried out at the same time, each part should be reported.

Aircraft Serial No. _____ Aircraft Reg. No. _____

Airframe Hours: _____ Airframe Landings _____

S.B. Incorporation date _____ Service Order No. _____

(dd/mm/yy)

Facility Incorporating S.B. _____

Name _____ Signature _____ Date _____

Signature not required if sent by E-Mail (dd/mm/yy)

-- --

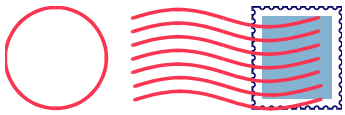

Bombardier Business Aircraft Customer Services (BBACS)

P.O. Box 6087, Station Centre-ville
Montreal, Québec, Canada H3C 3G9

Attention: Customer Support Department, Maintenance Engineering

-- --