

Civil version: LP

ALERT SERVICE BULLETIN

SUBJECT: DOORS - Side stairway door

Improvement of the locking system
Corresponds to modification 0728281

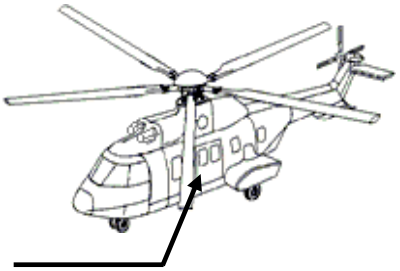

For the attention of
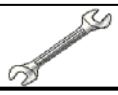

Revision No.	Date of issue
Revision 0	2017-08-29

Summary:

The purpose of this ALERT SERVICE BULLETIN is to improve the locking system of the LH side stairway door.

Compliance:

Airbus Helicopters renders compliance with this ALERT SERVICE BULLETIN mandatory.

1. PLANNING INFORMATION

1.A. EFFECTIVITY

1.A.1. Helicopters/installed equipment or parts

Helicopters equipped with the LH side stairway door assy PRE MOD 0728281.

NOTE 1

Refer to the Individual Inspection Record (or RIC AMS), the Equipment Log Cards (FM) of the side stairway door and the aircraft Log Book to identify the actual modification status of the aircraft.

1.A.2. Non-installed equipment or parts

Side stairway door assy PRE MOD 0728281.

NOTE 2

Refer to the FM of the side stairway door and the aircraft Log Book to identify the actual modification status of the aircraft.

1.B. ASSOCIATED REQUIREMENTS

Not applicable.

1.C. REASON

During an AS532 flight, the amber "DOOR" indicator light came on. Shortly afterwards, the LH side stairway door opened in flight, tearing off its attachment fittings. The door remained attached to the helicopter by the load compensator system cable. The helicopter landed without further consequences.

The door handles were in the closed position but the locking of the door was not secured by the internal claw engagement system of the lock, due to the presence of paint preventing handle return. In-flight vibrations led to the opening of the LH side stairway door.

The purpose of this ALERT SERVICE BULLETIN is to improve the locking system of the LH side stairway door.

The purpose of this ALERT SERVICE BULLETIN supersedes the instructions of ALERT SERVICE BULLETIN No. 52A014 (Check for correct locking of the side stairway door).

1.D. DESCRIPTION

This ALERT SERVICE BULLETIN consists in:
- Removing the LH side stairway door.
- Removing the handle assy.
- Removing the lock control lever.
- Modifying the stop support box.
- Installing a locking visualization system (Helicopters PRE MOD 0726391 only).
- Installing a new handle assy.
- Installing the LH side stairway door.

1.E. COMPLIANCE

1.E.1. Compliance at H/C manufacturer level

Airbus Helicopters recommends compliance with instructions given in paragraph 3.B. of this ALERT SERVICE BULLETIN, in accordance with operational and contractual constraints.

1.E.2. Compliance in service

The works must be performed on the helicopter and on non-installed equipment by the Operator.

Helicopters/installed equipment or parts:

For helicopters PRE MOD 0726391 (VIP door closing immediate warning), comply with paragraph 3.B. within 24 months, following receipt of this ALERT SERVICE BULLETIN issued on the date mentioned in page footer.

For helicopters POST MOD 0726391 (VIP door closing immediate warning), comply with paragraph 3.B. except paragraph 3.B.2.d. within 24 months, following receipt of this ALERT SERVICE BULLETIN issued on the date mentioned in page footer.

Non-installed equipment or parts:

Modify stock as per paragraph 3.B.5. before installation or at the latest within 24 months following receipt of this ALERT SERVICE BULLETIN issued on the date mentioned in page footer.

1.F. APPROVAL

Approval of modifications:

The information or instructions relate to modification 0728281 which was approved on October 11, 2016 under the authority of EASA Design Organization Approval No. 21J.700 for helicopters of civil versions subject to an Airworthiness Certificate.



Approval of this document:

The technical information contained in this ALERT SERVICE BULLETIN Revision 0 was approved on August 29, 2017 under the authority of EASA Design Organization Approval No. 21J.700 for helicopters of civil versions subject to an Airworthiness Certificate.

The technical information contained in this ALERT SERVICE BULLETIN Revision 0 was approved on August 29, 2017 under the prerogatives of the recognition of design capability FRA21J-002-DGA for French Government helicopters.

1.G. MANPOWER



For compliance with this ALERT SERVICE BULLETIN, Airbus Helicopters recommends the following personnel qualifications:

Qualification:
- 1 Mechanical Technician.
- 1 Airframe Technician.



Time for the operations is indicated for reference, for a standard configuration.

Time for the operations:
- 6 hours approximately for the Mechanical Technician.
- 2 hours approximately for the Airframe Technician.



The estimated helicopter downtime is approximately 1 day.

1.H. WEIGHT AND BALANCE



Negligible.

1.I. POWER CONSUMPTION

Not applicable.

1.J. SOFTWARE UPGRADES/UPDATES

Not applicable.

1 K. REFERENCES

The following documents are necessary for compliance with this ALERT SERVICE BULLETIN.

Aircraft Maintenance Manual (MMA):
MMA: 52-13-01-061: Removal-Installation – Side stairway door.

Standard Practices Manual (MTC):
MTC: 20-02-05-404: Joining by bolts and nuts.
MTC: 20-02-06-404: Safetying with cotter pins.
MTC: 20-02-06-409: Safetying with Loctite compound.
MTC: 20-04-01-102: Use of cleaning products on individual parts and on aircraft.
MTC: 20-04-04-403: Touch-up of protective treatment with Alodine 1200.
MTC: 20-04-05-402: Use of EPOXY primer P05 and P20.
MTC: 20-04-05-422: Use of Polyurethane SATINE finish paint (1500-M).
MTC: 20-05-01-212: Implementation of sealing compound PR 1829 B2.
MTC: 20-07-03-406: Instructions applicable when working on an aircraft electrical circuit and power generating systems.
MTC: 20-08-05-101: Drafting and updating the log card (FM).
MTC: 20-08-05-103: Monitoring of parts in operation - marking - service life customization.

1.L. OTHER AFFECTED PUBLICATIONS



This ALERT SERVICE BULLETIN will give rise to amendment of the following documents by Airbus Helicopters:

- Illustrated Parts Catalog (IPC),
- Aircraft Maintenance Manual (MMA),

These documents will be updated during a future revision.

1.M. PART INTERCHANGEABILITY OR MIXABILITY

Interchangeability:

Side stairway doors PRE MOD 0728281 are not interchangeable with POST MOD 0728281 doors.

Mixability:

Not applicable.

2. EQUIPMENT OR PARTS INFORMATION

2.A. MATERIAL: PRICE - AVAILABILITY - PROCUREMENT

For any information concerning cost of kits and components of modifications, contact the Airbus Helicopters Network Sales and Customer Relations Department.

Airbus Helicopters
Etablissement de Marignane
Direction Ventes et Relations Client
13725 MARIGNANE CEDEX
FRANCE

NOTE 1

On the purchase order, please always specify the mode of transport, the destination and the serial numbers of the helicopters to be modified.

NOTE 2

For ALERT SERVICE BULLETINS, order by:
Telex: HELICOP 410 969F
Fax: +33 (0)4.42.85.99.96.

2.B. LOGISTIC INFORMATION

Not applicable.

2.C. EQUIPMENT OR PARTS REQUIRED PER HELICOPTER/COMPONENT

Kits to be ordered for one helicopter or one assembly:

For helicopters PRE MOD 0726391:
Order, as required, one kit 332A08-1666-0571 and one kit 332A08-0907-0271.

For helicopters POST MOD 0726391:
Order, as required, one kit 332A08-1666-0571 only.

Designation	Qty	New P/N	Item	Former P/N	Instruction
VIP door locking improvement kit including:		**332A08-1666-0571**			
Stairway door lock including:	1	330A22-2442-01	1	330A22-2442-00	Scrap
Handle	1	/	1a		
Pins	3	/	1b		
Cover	1	/	1c		
Screw	4	/	1d		
Spring	1	/	1e		
Lever	1	/	1f		
Axle	1	/	1g		
Screw, pressure	1	/	1h		

Designation	Qty	New P/N	Item	Former P/N	Instruction
VIP door locking improvement kit including (cont'd):		**332A08-1666-0571**			
Lock, cylinder	1	/	1j		
Box	1	/	1k		
O-ring	1	/	1m		
Handle, outer	1	330A22-2443-21	2	330A22-2443-20	Scrap
Cover, upper	1	332A22-0332-20	3		
Cover, lower	1	332A22-0333-20	4		
Support, spring	1	332A22-0330-20	5		
Spring	1	330A22-2494-20	6		
Shim	1	330A22-2411-46	7		
Ring, retaining	1	23201AM0160T	8		
Washer	5	23111AG050LE	9		
Screw	5	22271BC050014L	10		
Nut	2	ASN52320BH050N	24		
Pin	3	NSA5319-05-025	43		

Designation	Qty	New P/N	Item	Former P/N	Instruction
VIP door closing direct visualization kit including:		**332A08-0907-0271**			
Plexiglass	1	332A22-0326-20	11		
Window, visualization	1	332A22-0326-01	12		
Blanking cap, fixed	1	332A22-0326-02	13		
Lever, control, pennant door	1	332A22-0326-03	14		
Shim, adjustment	1	332A22-0326-22	15		
Flame assy	1	332A22-0326-04	16		
Screw, csk head	2	22256BC040004L	17		
Screw, hexagonal head	2	22208BC040014L	18		
Screw, special	4	A0164TK040S010X	19		
Nut, self-locking	6	ASN52320BH040N	20		
Washer	6	23111AG040LE	21		
Washer, plain	2	23112AG040LE	22		
Pin, conical	2	53301-30-30BCL	23		
Nut	1	ASN52320BH050N	24		

Components to be ordered separately:

Order components listed below:

Designation	Qty	New P/N	Item	Former P/N	Instruction
Outer label, White (EN)	1	332A00-0688-AE	35		
Outer label, White (FR)	1	332A00-0688-AF	36		
Inner label, White (EN)	1	332A00-0649-AJ	37		
Inner label, White (FR)	1	332A00-0649-AK	38		

Consumables to be ordered separately:

As per Work Cards and Tasks mentioned in this ALERT SERVICE BULLETIN and list below:

Designation	Qty	Product P/N	CM	Item
Red paint	AR	ECS2018.40-2801	CM 4185	25
Adhesive, Loctite (242)	AR	ASNA4018	CM 683	26
Sealant (PR1829B2)	AR	ECS6046-1198	CM 6232	27
Chemical transformation agent	AR	ALODINE1200	CM 316	28
EPOXY primer (P05)	AR	DHS186-111.20	CM 487	29
Grease	AR	AIR4210B	CM 115	30
Green paint	AR	ECS2018.40-2455	CM 4186	44

The consumables can be ordered separately from the company KLX AEROSPACE SOLUTIONS.
Website : https://www.klxaerospace.com/klxaero/
Telephone: +1.305.925.2600
AOG: +1.305.471.8888

2.D. EQUIPMENT OR PARTS TO BE RETURNED

Not applicable.

3. ACCOMPLISHMENT INSTRUCTIONS

3.A. GENERAL

- Unless otherwise mentioned, comply with instructions for joining by bolts and nuts as per MTC Work Card 20-02-05-404.
- Read and comply with instructions on safetying with cotter pins as per MTC Work Card 20-02-06-404.
- Read and comply with instructions for protection touch-up with Alodine 1200 as per MTC Work Card 20-04-04-403.
- Read and comply with instructions for use of epoxy primer P05-P20 as per MTC Work Card 20-04-05-402.
- Read and comply with instructions for implementation of sealing compound PR 1829 B2 as per MTC Work Card 20-05-01-212.

3.B. WORK STEPS

3.B.1. Preliminary steps

- Disconnect all electrical supply sources as per MTC Work Card 20-07-03-406.
- Install suitable access means.
- Remove protective carpet.
- Remove stairway door (a) (Figure 1) as per MMA Task 52-13-01-061.
- Remove screws (m), cups (n) and step No. 4 (o) from stairway door (a).

3.B.2. Procedure

3.B.2.a. Replacement of the handle assy (Figure 1, Figure 3 and Figure 5)

As per Figure 1:
- On inside door:
  - Remove screw (g), washer (h), nut (j) from rod (f) (DETAIL B).
  - Disconnect rod (f) from lock (e).
  - Remove screw (g), washer (h), nut (j) from rod (k).
  - Disconnect rod (k) from lock (e).
  - Scrap nuts (j).
- On outside door:
  - Remove and scrap retaining ring (ac) and outer handle (ab) (DETAIL C).
  - Remove screws (ad), washers (ae) and lock (e).
  - Remove barrel (af) from lock (e).
  - Scrap lock (e).

As per Figure 3 and Figure 5:
- On lock (1) (DETAIL J Figure 5):
  - Remove the two pins (1b) and handle (1a) (DETAIL K).
  - Remove screws (1d) and cover (1c).
  - Remove spring (1e).
  - Remove pin (1b), lever (1f) and axle (1g).
  - On axle (1g), loosen screw (1h) and remove barrel (1j).
  - Scrap pins (1b) and store barrel (1j).
- Install barrel (af) on axle (1g), tighten screw (1h) to standard torque.
- Put box (1k) and lower cover (4) in position on stairway door (a) by interlaying sealant (27).

- Attach box (1k) and lower cover (4) with three screws (10) and three washers (9) (DETAIL C Figure 3).
- Put support (5), shim (7) and handle (2) in position on axle (1g) (DETAIL K Figure 5).
- Align holes (Ø 2 mm) of handle (2), support (5) and shim (7).

CAUTION

SPRING (6) MUST FAVOR THE LOCKING (CLOCKWISE ROTATION) OF THE MECHANISM WHEN ACTUATING HANDLE (2).

- Install spring (6) on axle (1g).

NOTE 1

The longer end of spring (6) must be inserted in support (5), shim (7) and handle (2).

- Install axle (1g) equipped with support (5), shim (7) and spring (6) on box (1k) by inserting the shortest end of spring (6) in hole T (DETAIL J).

NOTE 2

Make sure that o-ring (1m) is correctly positioned in its housing before inserting axle (1g).

NOTE 3

Turn axle (1g) with handle (2) in the counterclockwise direction (spring tensioned) until spring (6) is aligned with hole T of box (1k).

- Install lever (1f) and a pin (43) on axle (1g) (DETAIL K).
- Install spring (1e) on lever (1f).
- Install cover (1c) by inserting the end of the spring in its orifice.
- Attach cover (1c) with screws (1d) to match box (1k).
- Install handle (1a) and two pins (43).
- Apply grease (30) to ball-ends of lever (1f) (DETAIL J).
- Connect rods (f) and (k) (DETAIL B Figure 3) on lever (1f) (DETAIL J Figure 5).
- Install screws (g), washers (h) and nuts (24) (DETAIL B Figure 3).
- Adjust the locking system as per paragraph 4.A.1.a.
- Install retaining ring (8) (DETAIL C Figure 3).
- Put upper cover (3) in position on stairway door (a) by interlaying sealant (27).
- Attach upper cover (3) with three screws (10) and three washers (9) (DETAIL C).

3.B.2.b. Removal of the upper lock control lever (Figure 1)

As per Section D-D:
- Remove conical pin (y) and upper lock (x).
- Remove conical pin (y) and upper lock axle (aa) from lock control lever (q).
- Scrap conical pins (y).
- Remove screws (u), washers (v) and lock support (w).

As per Detail B:
- Remove axle (r), washers (s), nut (t) and lock control lever (q) from rod (p).
- Scrap lock control lever (q) and nut (t).

3.B.2.c. Modification of the stop support box (Figure 1 and Figure 2)

As per Detail A, Figure 1:
- Remove screws (c), washers (d) and stop (b) from box (z).

As per Figure 2:
- Cut out box (z) to diameter 34 mm as per Detail I.
- Drill four holes dia. 4.5 mm on box (z).
- Drill two holes dia. 4.5 mm on box (z) as per Detail F.
- Countersink at 100° the two holes dia 4.5 mm on box (z).
- Cut out the riser No. 4 of door (a) as per Detail G.
- Cut out the coating of door (a) as per Detail H.
- Deburr and protect with chemical transformation agent (28) and primer (29) the modified areas of box (z) and door (a).

3.B.2.d. Installation of the locking visualization system (Figure 3 and Figure 4) (PRE MOD 0726391 only)

- Apply red paint (25) to upper lock (x) as per MTC Work Card 20-04-05-422 and Detail I of Figure 4.
- Install glass (11), window (12), screws (19), washers (21) and nuts (20) (DETAIL G).
- Seal glass (11) with sealant (27).
- Install fixed blanking cap (13), screws (17), washers (21) and nuts (20).
- Install stop (b), screws (c) and washers (d) on box (z) (DETAIL E).
- Adjust the visualization system as per paragraph 4.A.1.b.
- Perform the marking as per paragraph 4.A.1.c.
- Install lock support (w), screws (u) and washers (v) (SECTION D-D Figure 3).
- Install upper lock (x) and conical pin (23) on axle (aa).
- Put axle (aa) in position in lock support (w).
- Assemble lever (14), shim (15) and flame assy (16) with screws (18) and washers (22) (DETAIL H Figure 4).
- Put the assembly in position on axle (aa) (DETAIL F Figure 4).
- Check the adjustment of shim (15) and flame assy (16).

NOTE 4

Flame assy (16) and axle (aa) must be correctly centered and rotation must be frictionless.

CAUTION

FLAME ASSY (16) AND FIXED BLANKING CAP (13) ARE ADJUSTED AND ATTACHED SUCH THAT WHENEVER THE LOCK IS CLOSED, ONLY THE GREEN COLOR MUST BE VISIBLE. THE RED COLOR MUST APPEAR AT THE SLIGHTEST MOTION OF THE LOCKS WARNING ABOUT THE DANGER THAT REPRESENTS THE OPEN DOOR.

- Check the position of flame assy (16) and fixed blanking cap (13).
- Remove screws (18) one by one and install them by applying loctite adhesive (26) (DETAIL H).
- Install lever (14), shim (15), flame assy (16) and conical pin (23) on axle (aa) (DETAIL F).
- Apply grease (30) to ball-end of lever (14).
- Connect rod (p) to lever assy (14), shim (15) and flame assy (16): screw (r), washer (s), nut (24) (DETAIL B Figure 3).

3.B.2.e. Modification of the door marking (Figure 6 and Figure 7)

- Identify the door areas where labels will be bonded as per Figure 6 and Figure 7.
- Clean these areas as per MTC Work Card 20-04-01-102.
- Bond label (35) or (36) to the external face of the door as per helicopter configuration and Figure 6.
- Bond label (37) or (38) to the internal face of the door as per helicopter configuration and Figure 7.

3.B.2.f. Identification of the door

- Modify door P/N as per paragraph 3.C.
- Create the log card (FM) of the stairway door P/N 330A22-2400-06 as per MTC Work Card 20-08-05-101.

3.B.3. Tests

- Install stairway door (a) (Figure 3) as per MMA Task 52-13-01-061.
- Close and lock stairway door (a).
- Check the locking mechanism of the door as per paragraph 4.A.2.a.
- Check the travel as per paragraph 4.A.2.b.
- Check the handle kinematics as per paragraph 4.A.2.c.

3.B.4. Final steps

- Open stairway door (a) (Figure 1).
- Install step No. 4 (o) on stairway door: screw (m), cups (n).
- Install protective carpet.
- Close stairway door (a).
- Remove the access means.
- Connect all electrical supply sources as per MTC Work Card 20-07-03-406.

3.B.5. Work steps for non-installed equipment or parts

- Modify stock of side stairway door P/N 330A22-2400-0502 as per paragraph 3.B.2. before installation on helicopter.
- Scrap stock of outer handle P/N 330A22-2443-20.
- Scrap stock of lock P/N 330A22-2442-00.

3.C. COMPLIANCE CONFIRMATION

Compliance with this document:

Record compliance with this ALERT SERVICE BULLETIN with the Revision number
- in the aircraft documents.
- on the log card (FM) of the stairway door P/N 330A22-2400-06 as per MTC Work Card 20-08-05-101.

Tracking of modifications in the documentation:

Record compliance with modification 0728281:
- in the aircraft documents.

Identification of modifications on equipment or parts:

Identify parts / assemblies as per table below and/or as per MTC Work Card 20-08-05-103:

Designation	Former P/N	New P/N	MOD	Type of marking
Lateral stairway door	330A22-2400-0502	330A22-2400-06	MOD 0728281	Indelible ink

3.D. OPERATING AND MAINTENANCE INSTRUCTIONS

Operating instructions:

Not applicable.

Maintenance instructions:

The Aircraft Maintenance Manual (MMA) will include these locking mechanism check and adjustment instructions (Appendices 4.A.) in a further revision. Once these instructions are included in the MMA, refer to it.

PAGE LEFT BLANK INTENTIONALLY

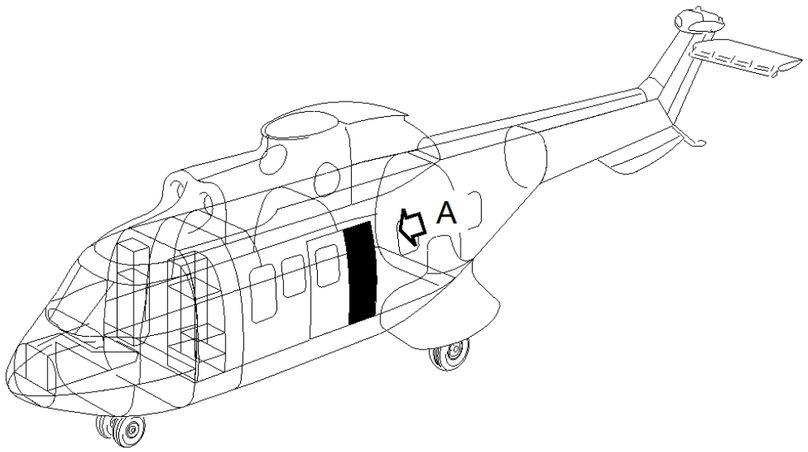

SECTION
D-D

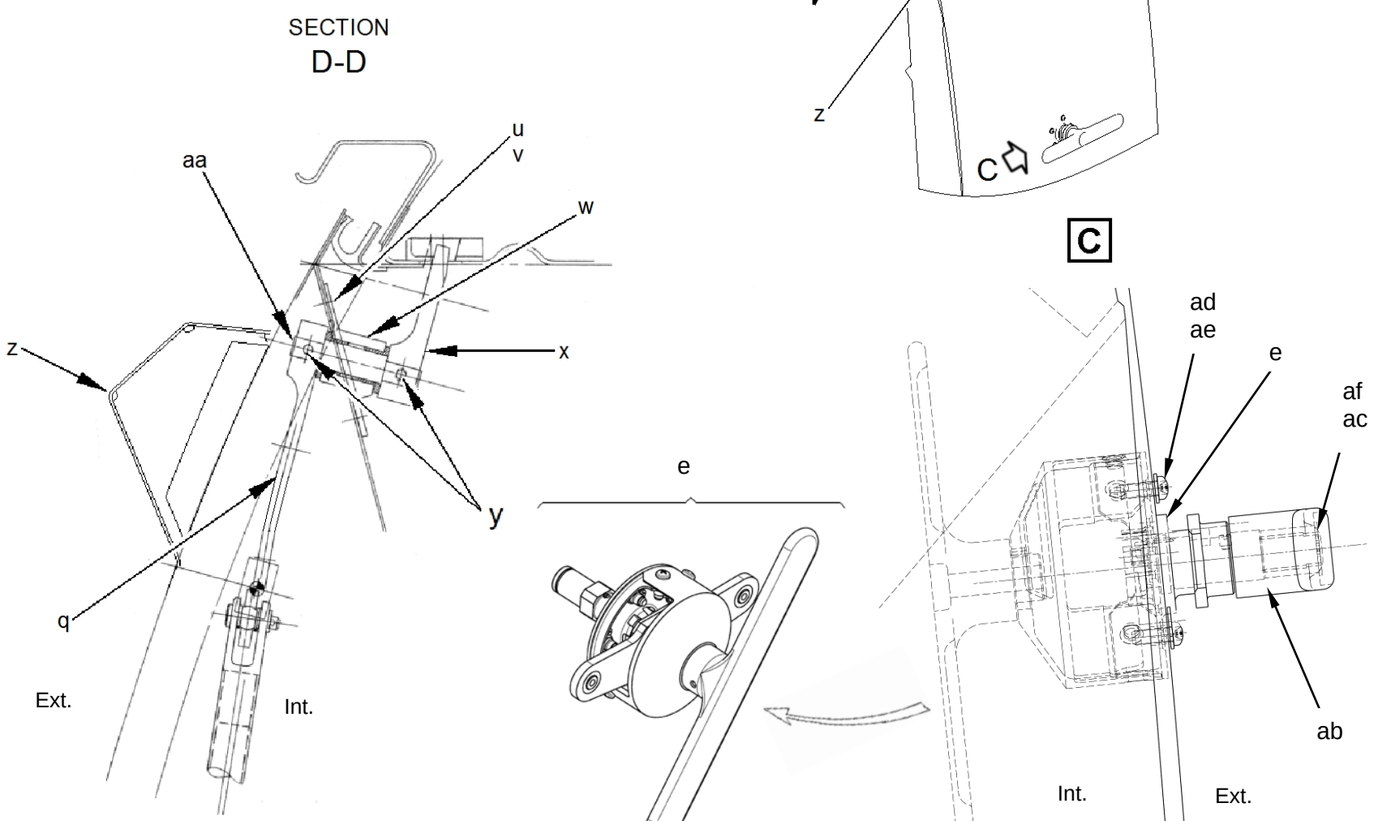

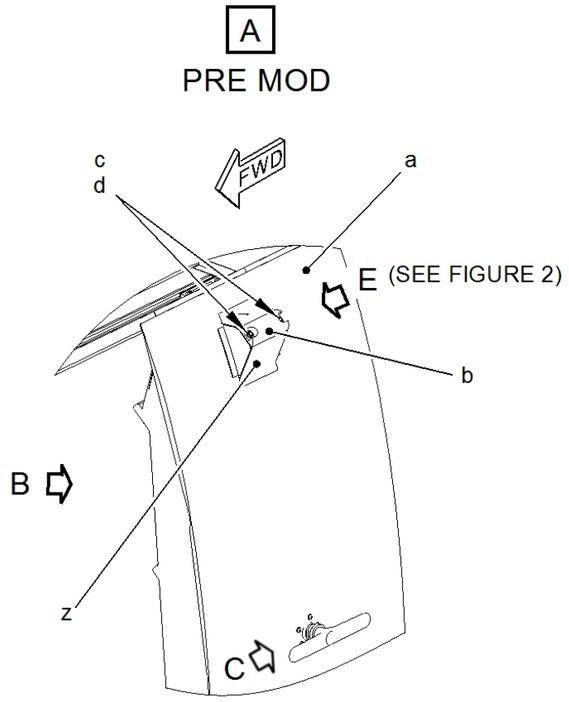

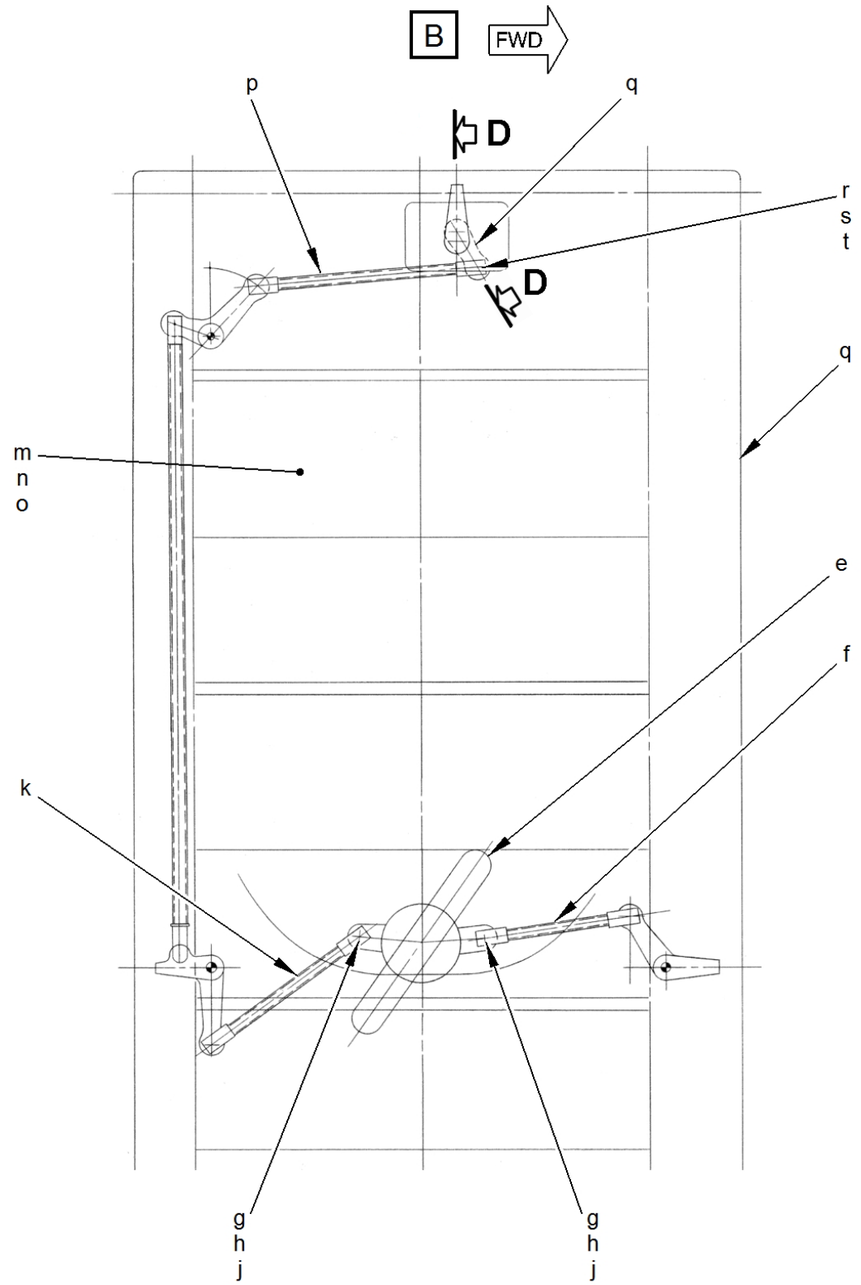

Figure 1

This document is available on the Internet: www.airbushelicopters.com/techpub/

PAGE LEFT BLANK INTENTIONALLY

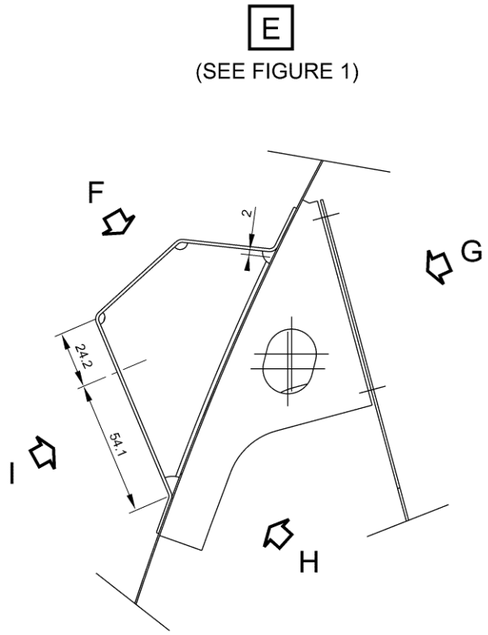
E
(SEE FIGURE 1)
F
G
H
I
2
24.2
54.1

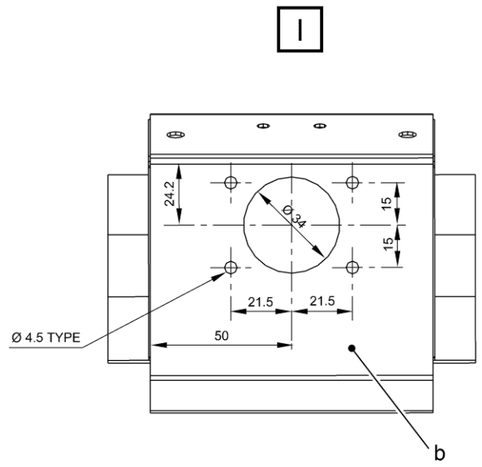
I
24.2
Ø 34
15
15
21.5
21.5
50
Ø 4.5 TYPE
b

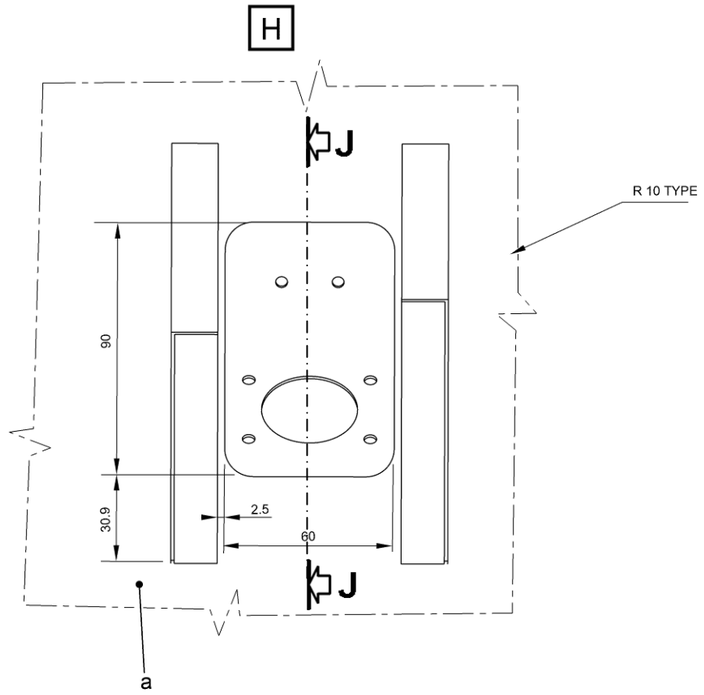
H
J
J
R 10 TYPE
90
30.9
2.5
60
a

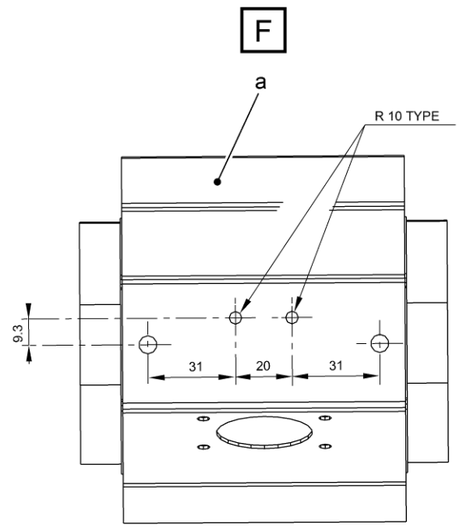
F
a
R 10 TYPE
9.3
31
20
31

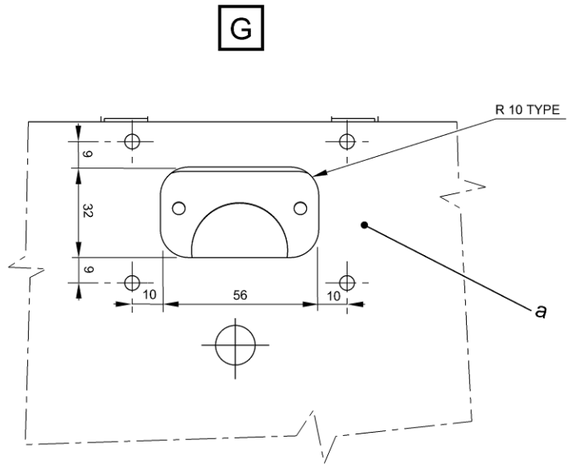
G
R 10 TYPE
9
32
9
10
56
10
a

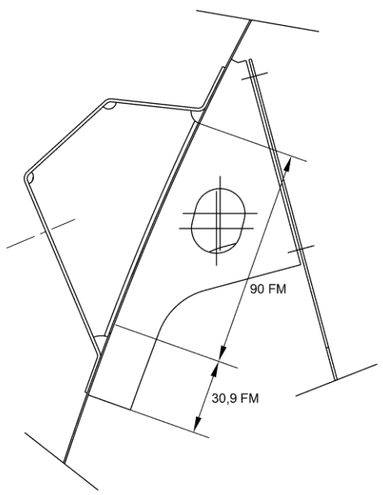
SECTION
J-J
90 FM
30,9 FM

Figure 2

PAGE LEFT BLANK INTENTIONALLY

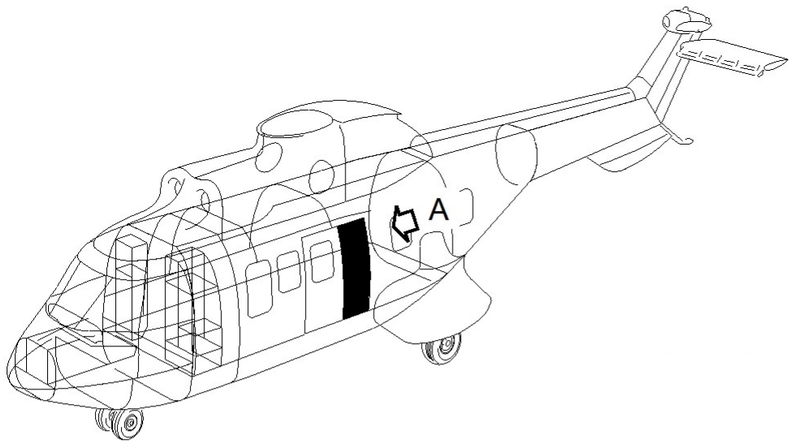

A

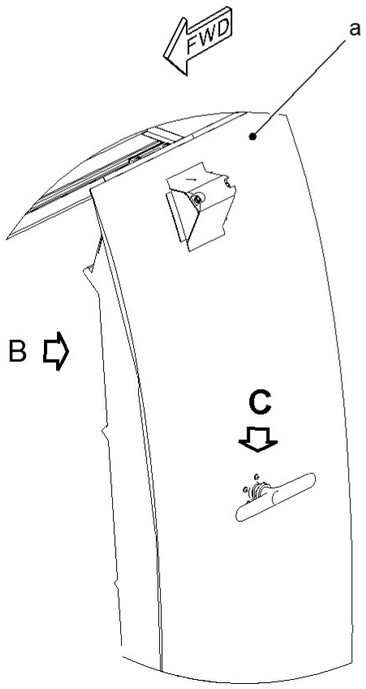

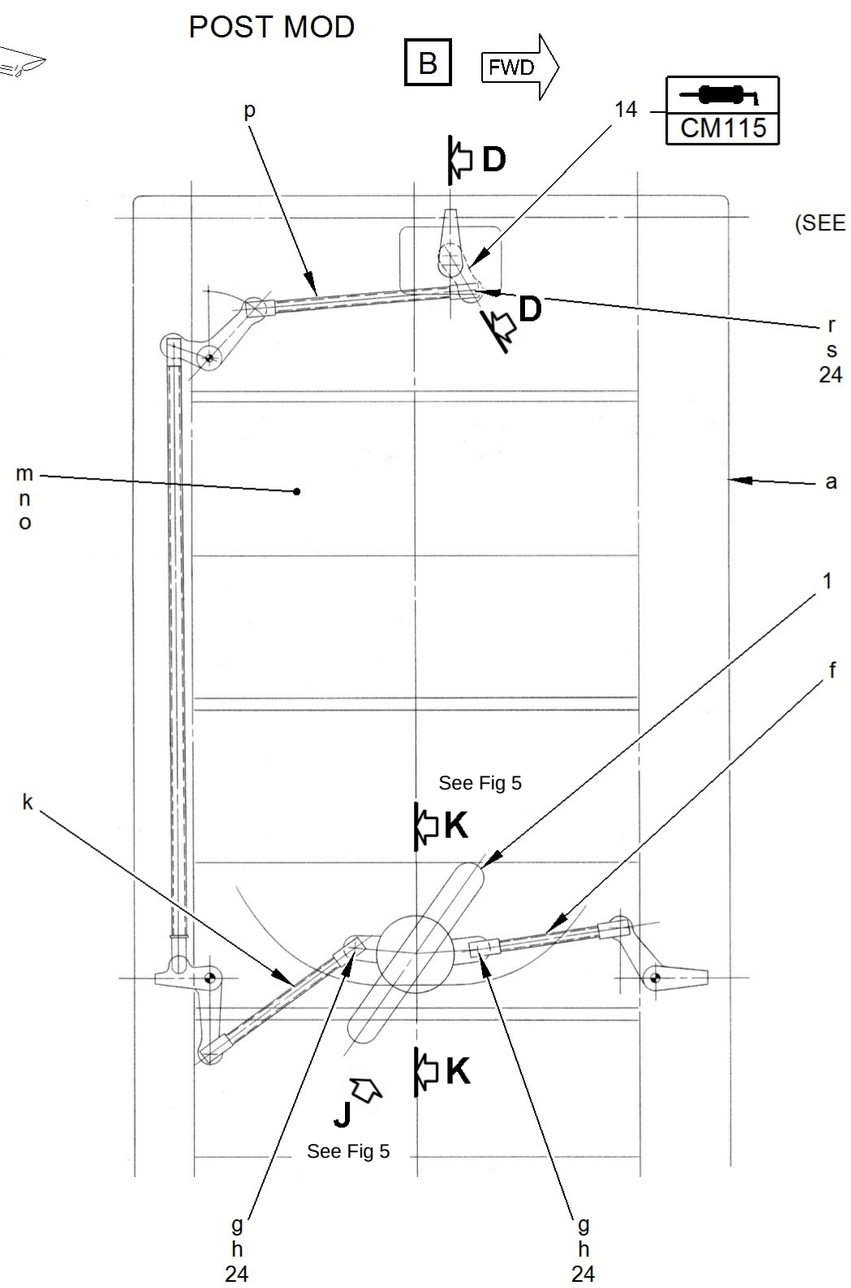

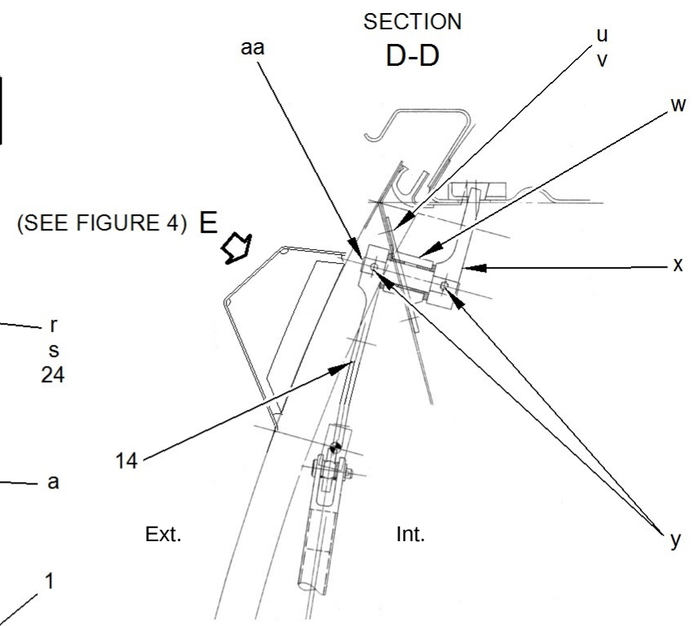

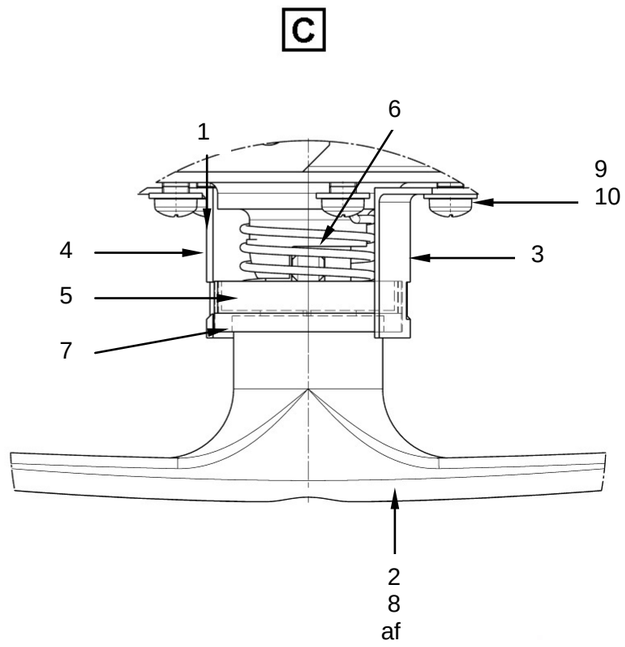

Figure 3

This document is available on the Internet: www.airbushelicopters.com/techpub/

PAGE LEFT BLANK INTENTIONALLY

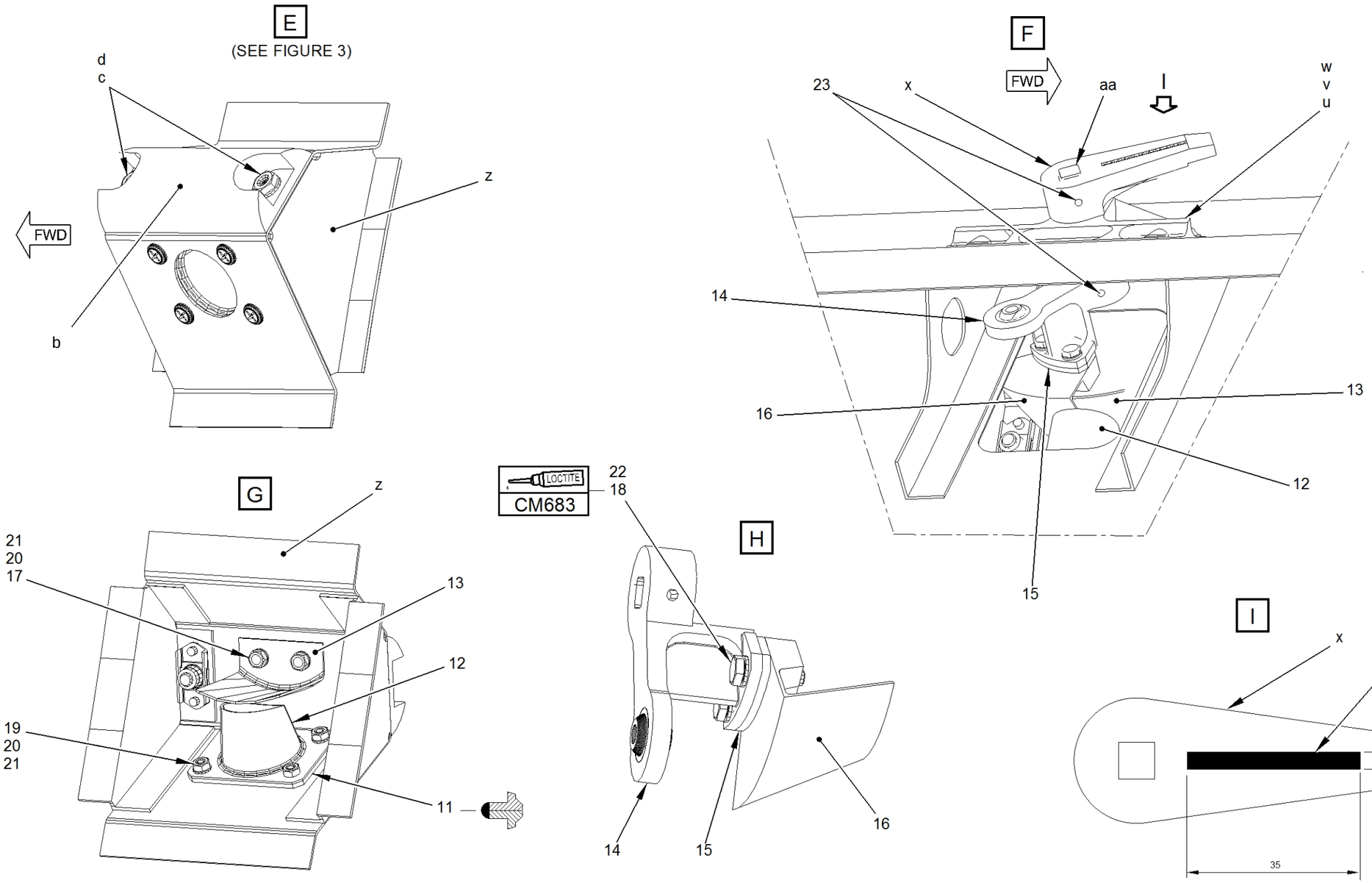
E
(SEE FIGURE 3)
d
c
z
FWD
b
F
FWD
23
x
aa
I
w
v
u
14
16
13
12
15
G
z
21
20
17
13
12
19
20
21
11
LOCTITE
CM683
22
18
H
14
15
16
I
x
25
2
35

Figure 4

PAGE LEFT BLANK INTENTIONALLY

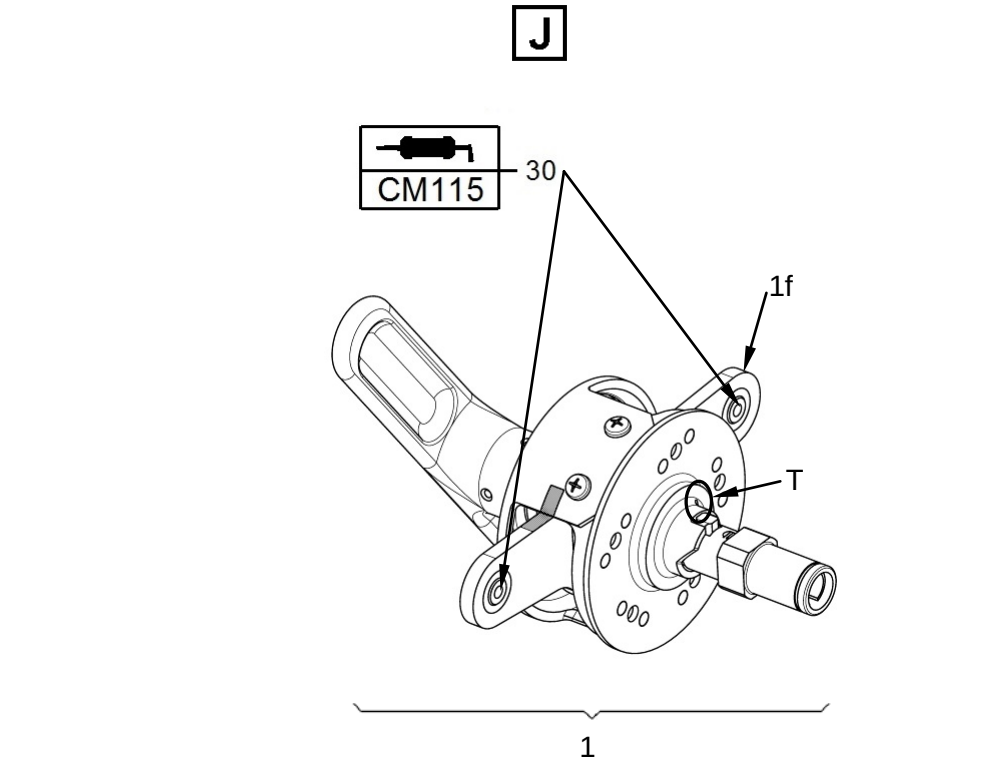
J
CM115
30
1f
T
1
K
2
7
5
6
1k
1f
1e
1c
1a
8
1j
af
EXT.
INT.
1g
1h
3/4
1m
1d
1b
43

Figure 5

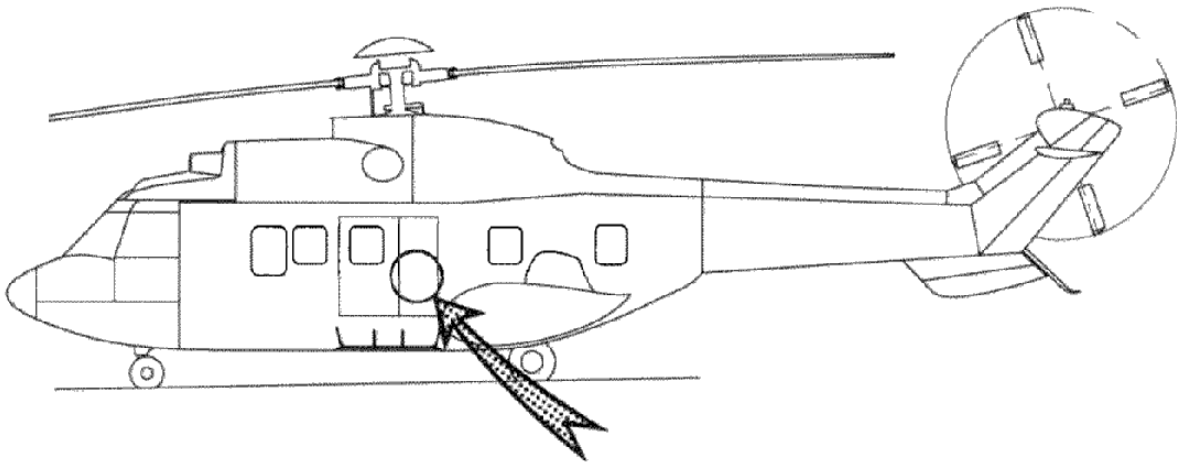

STAIRWAY DOOR
SEE FROM OUTSIDE

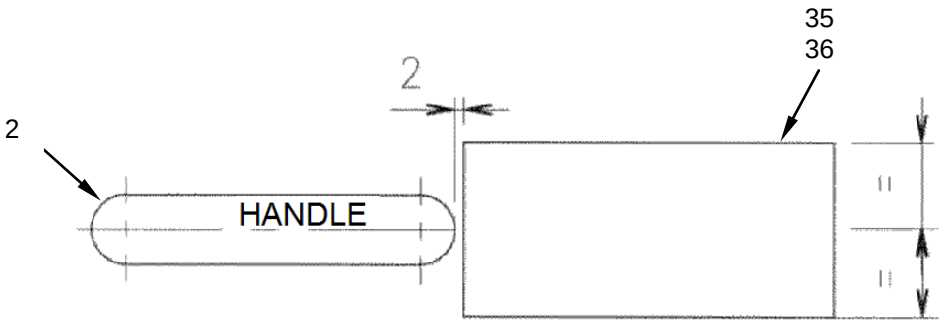

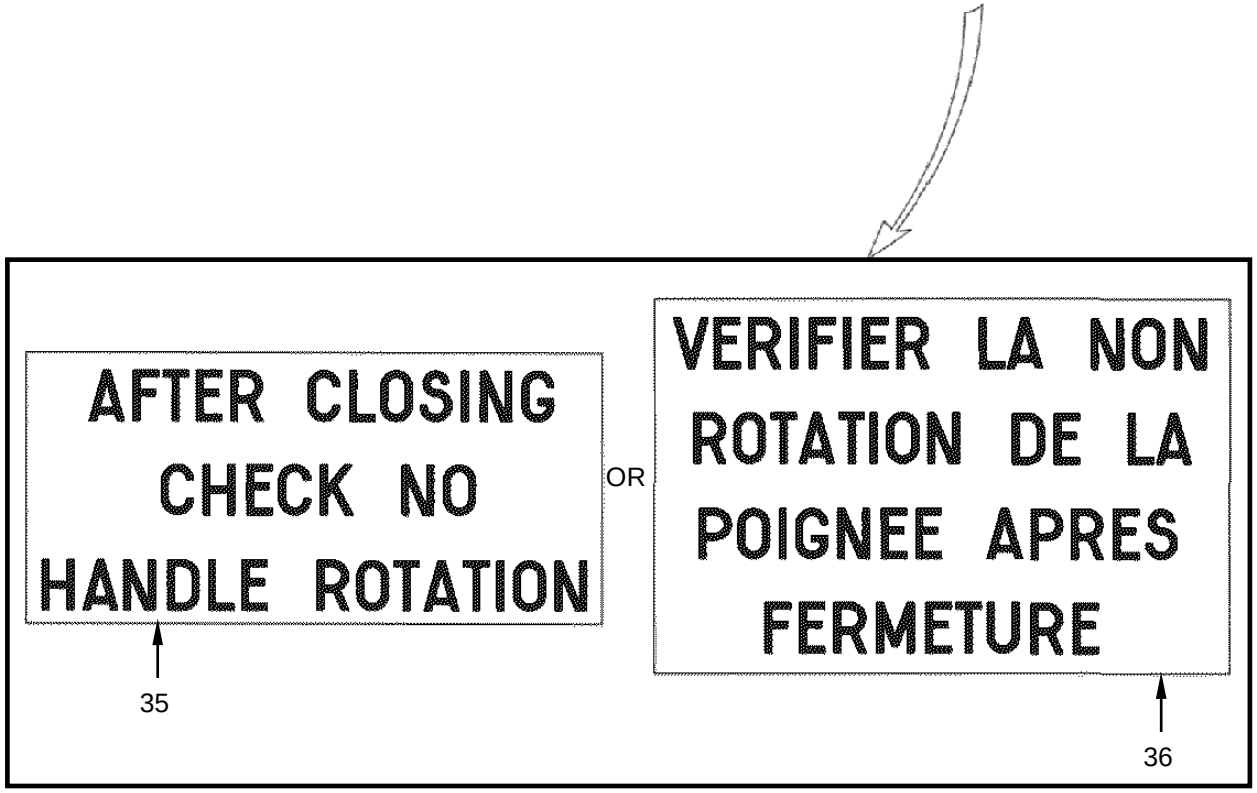

Figure 6

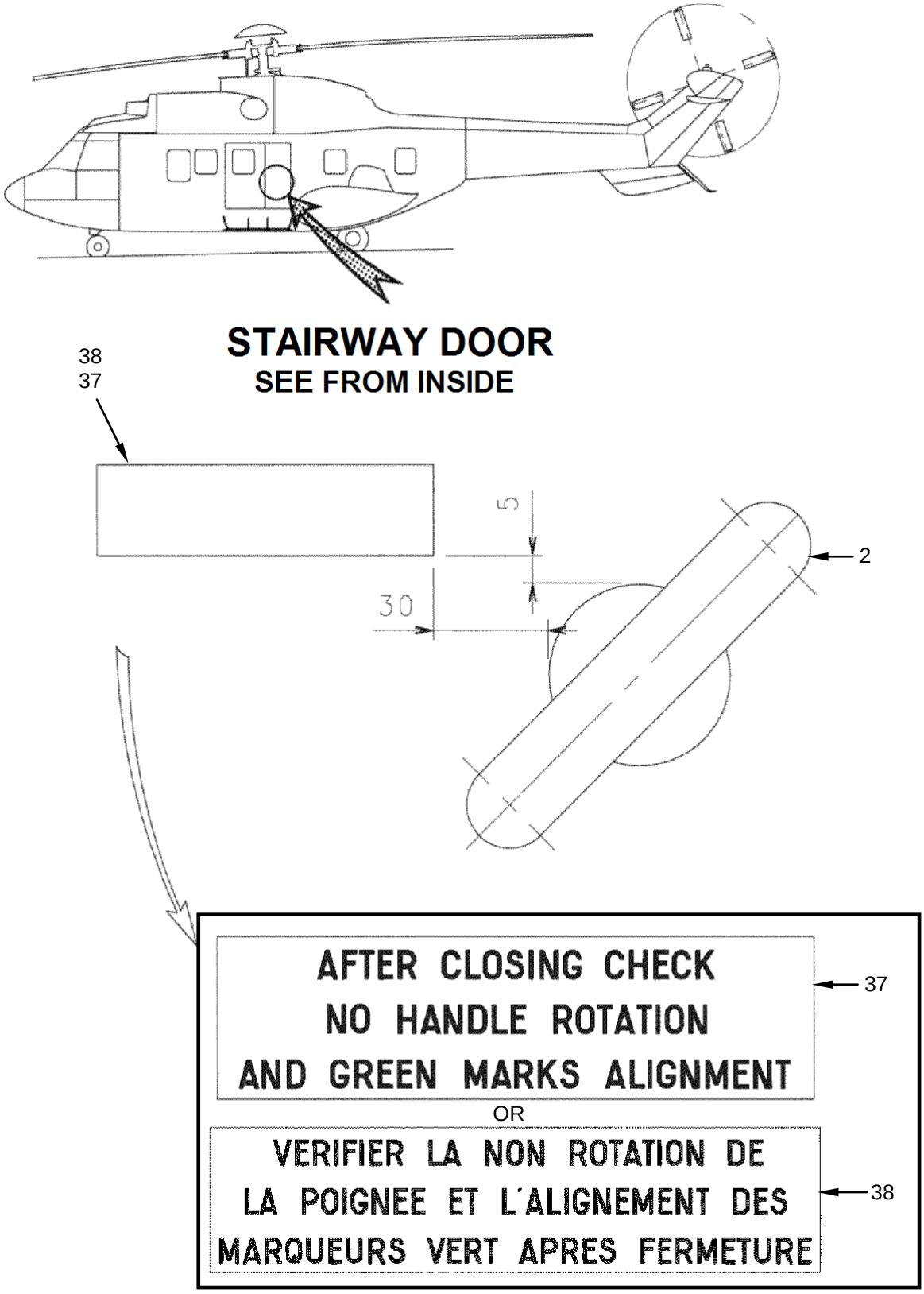
STAIRWAY DOOR
SEE FROM INSIDE
38
37
5
30
2
AFTER CLOSING CHECK
NO HANDLE ROTATION
AND GREEN MARKS ALIGNMENT
37
OR
VERIFIER LA NON ROTATION DE
LA POIGNEE ET L'ALIGNEMENT DES
MARQUEURS VERT APRES FERMETURE
38

Figure 7

4. APPENDIX

4.A. ADJUSTMENT OF THE LOCKING MECHANISM

During the adjustment phases, the locking mechanism must be in the "closed-locked door" position.

4.A.1. Adjustment of the stairway door locking mechanism

4.A.1.a. External adjustment

The external adjustment must be performed in compliance with paragraph 3.B.2.a.

4.A.1.a.1. Adjustment of the visual indicator in translational direction along Y axis

- The adjustment of the visual indicators is performed using a circular peel shim. This shim is used to adjust the spring support.
- Delaminate shim until the green visual indicator is in the correct position through the upper and lower fairing ports.

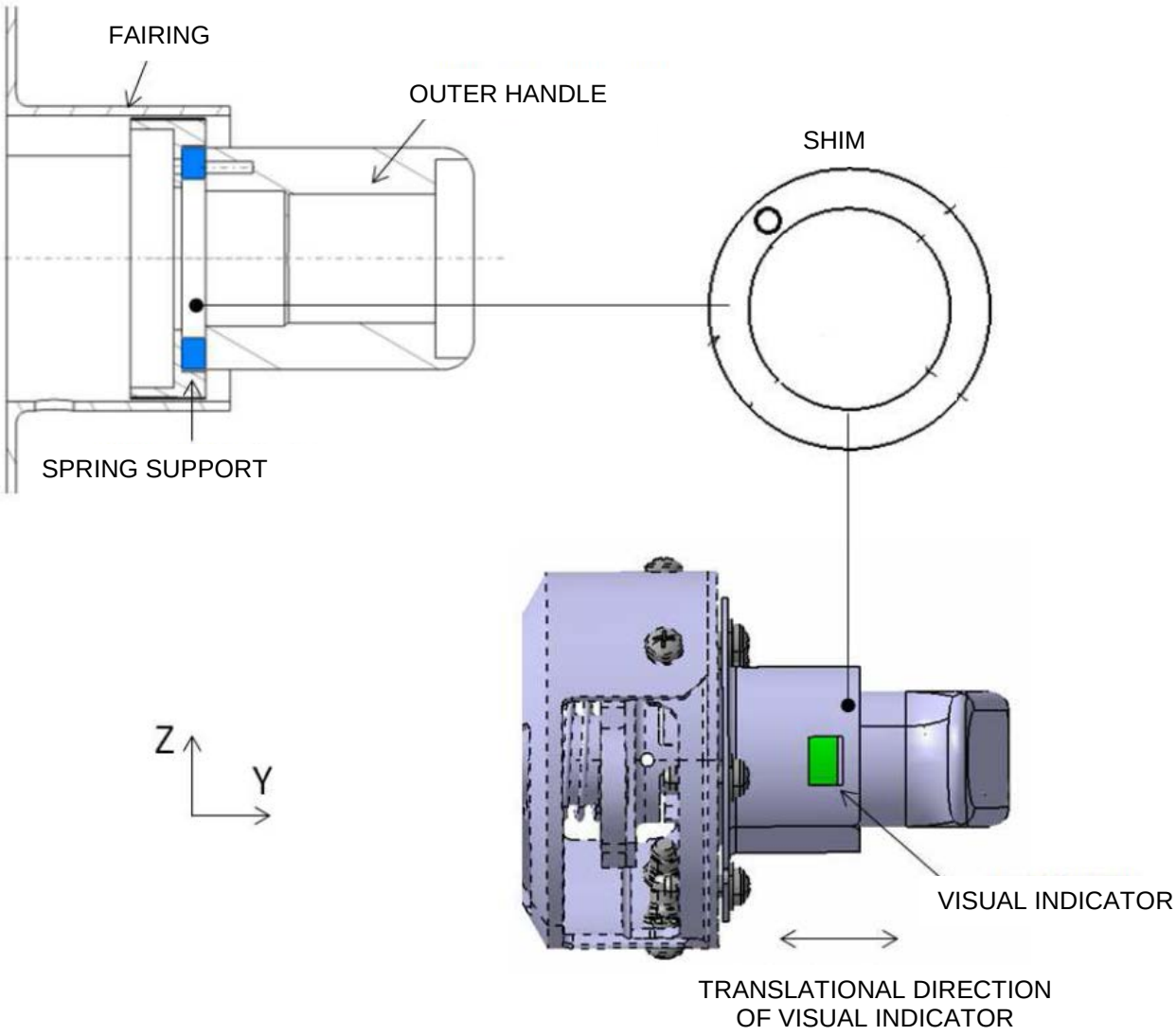

Adjustment of the external visual indicator

CRITERION: In the closed and locked position, no red mark must be visible.

4.A.1.a.2. Adjustment of the visual indicator in rotational direction along Y axis

- The adjustment of the visual indicators in rotational direction is performed through paint touch-up using paints (25) and (44) as per MTC Work Card 20-04-05-422.
- Apply touch-up on the spring support.

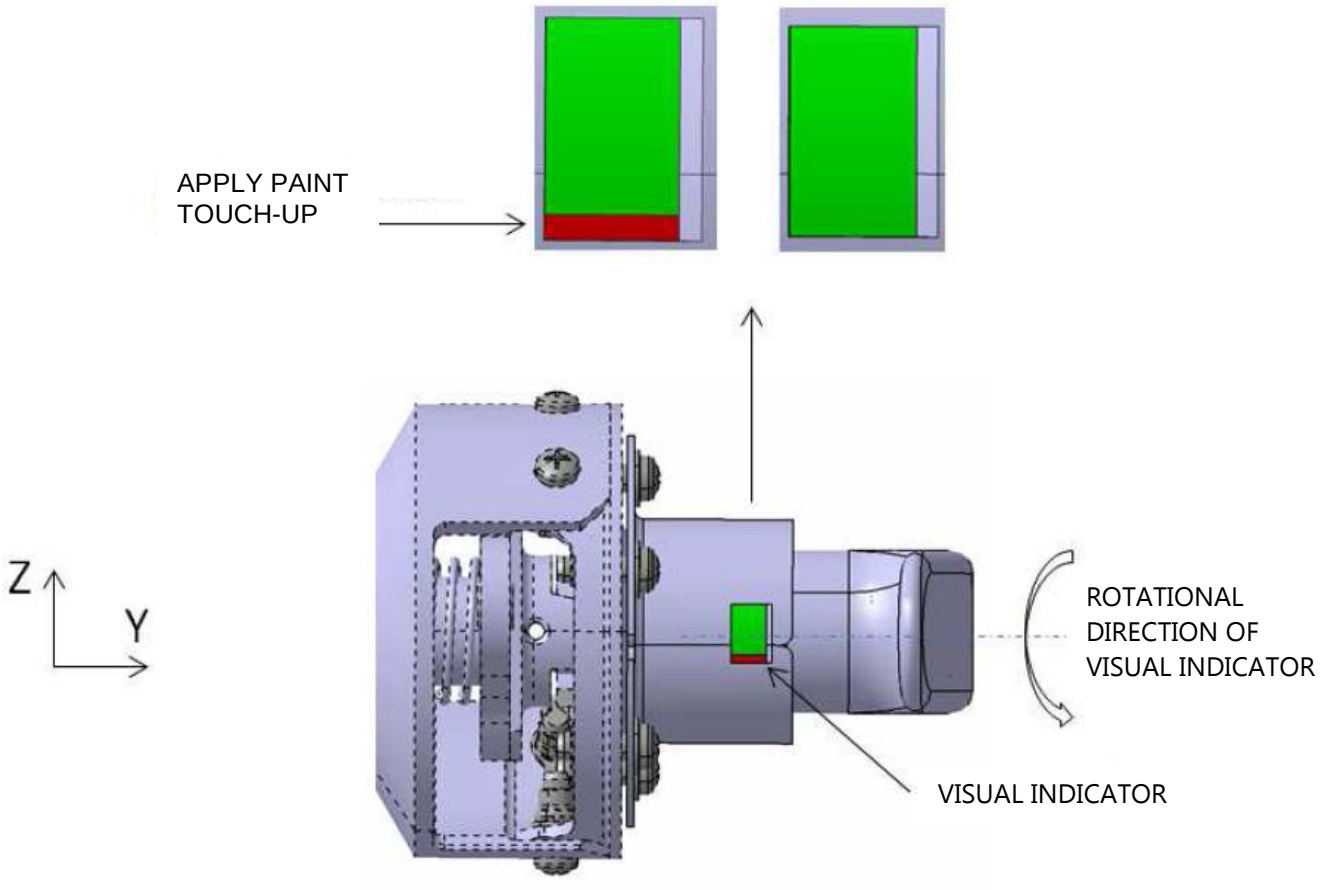

<u>CRITERION</u>: In the closed and locked position, no red mark must be visible on either side of the ports (LH and RH).

4.A.1.b. Internal adjustment

The internal adjustment must be performed in compliance with paragraph 3.B.2.d.

- The drive square must be drilled in accordance with the hub and the handle to the given dimensions.
- Ensure the engagement of pins (A, B and C) in the drive square then evaluate the distance by gauging on either side of drillings.
- The engagement for pins B and C is identical. See VIEW AS PER DETAIL 1 for assembly details.

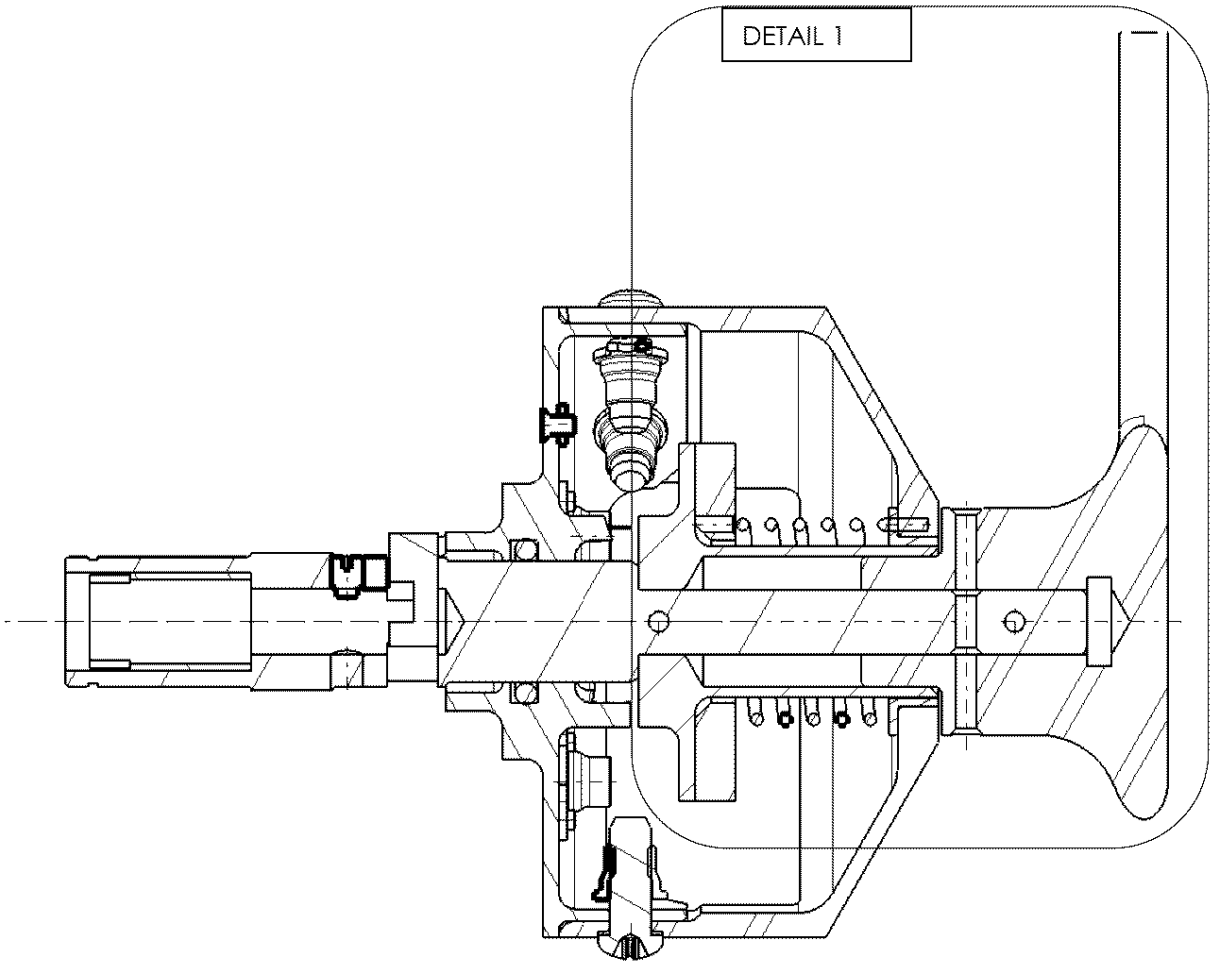

Pin assembly

CRITERION: The clearance for pin engagement must be 1.5 mm (.059 in) max. for pins A, B and C (see Detail 1).

View as per Detail 1

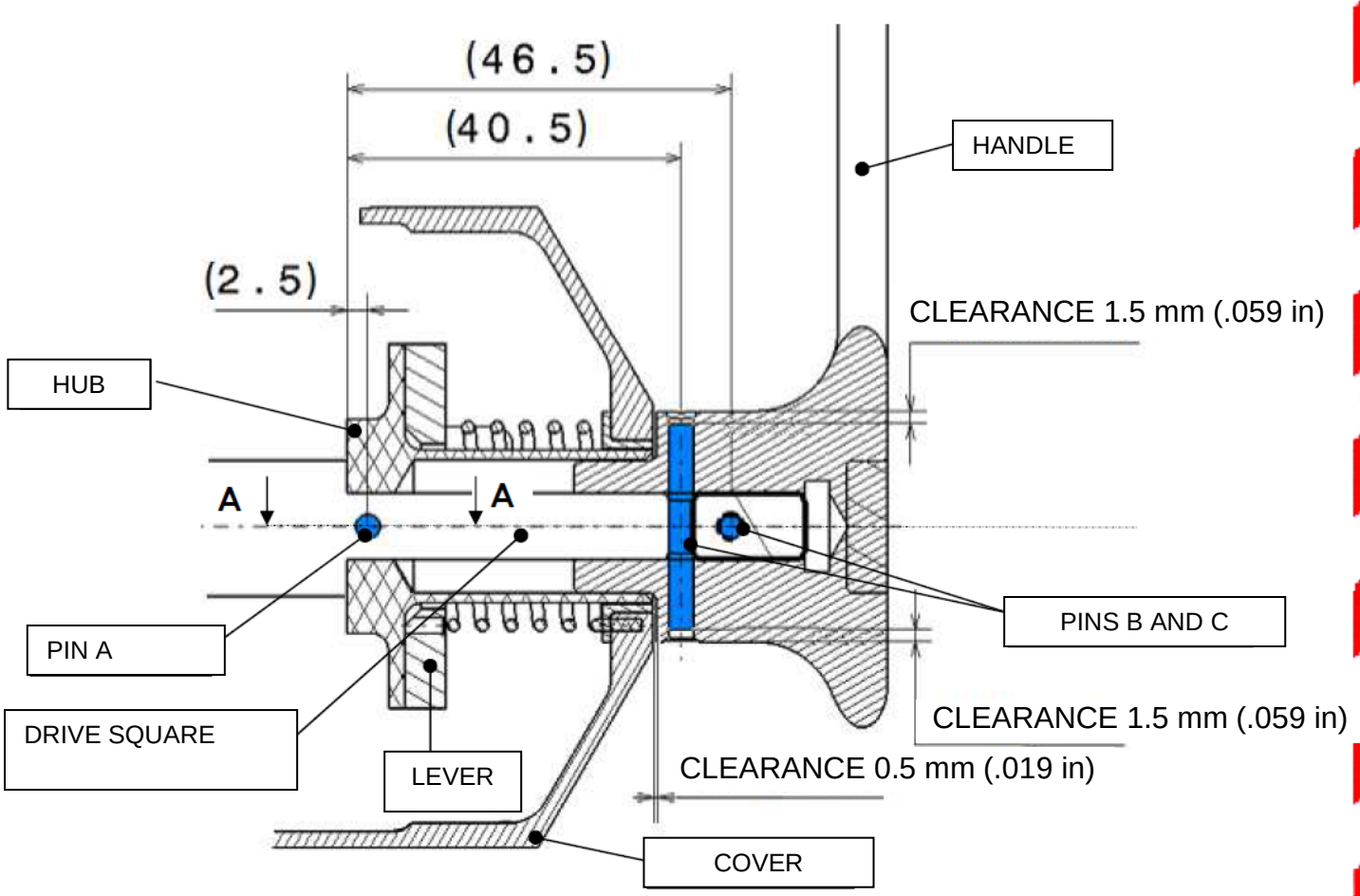

Pinning of handle and hub

TYPICAL SECTION A-A describes the max. clearance to be checked during pin assembly. This section is valid for all the system pins.

TYPICAL SECTION A-A

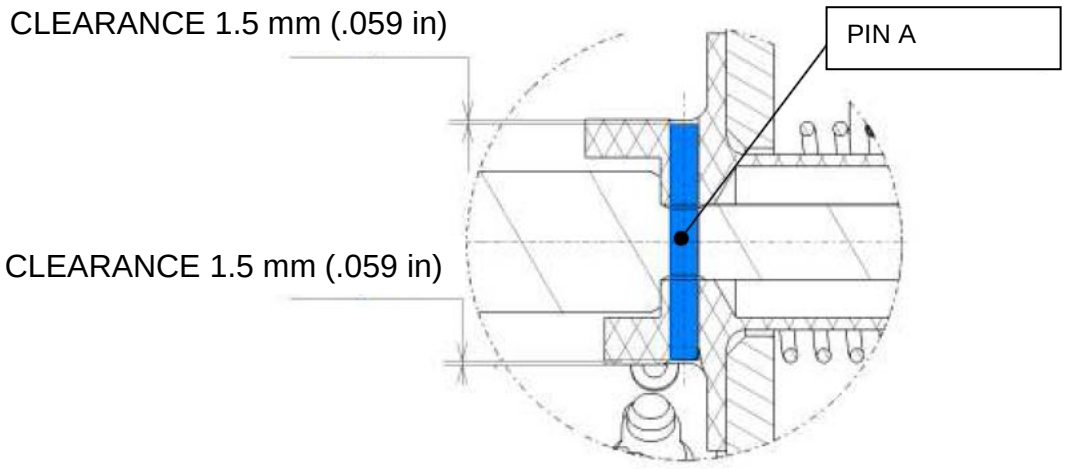

Pinning of handle and hub

4.A.1.c. Inside marking

The inside marking must be performed in compliance with paragraph 3.B.2.d.

- Once the adjustment has been performed, do the green marking on the cover and lever as per MTC Work Card 20.04.05.422.
  The slightest translational or rotational mechanism motion must enable the marking misalignment.

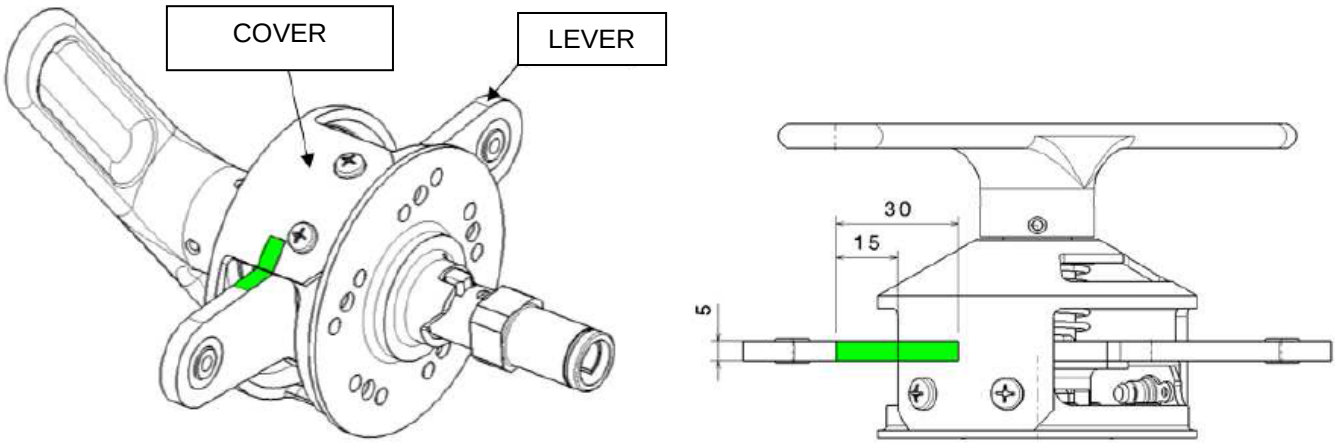

Marking after adjustment of cover and lever

CRITERION: the green marks after adjustment must be aligned at ± 0.1 mm (.0039 in)

- The position of the red visual indicator is the result of the previous adjustments. The red visual indicator must come on when the mechanism is in translational motion.
- If the red visual indicator is visible in the "closed and locked door" position, apply a finish paint touch-up.
- If the red visual indicator is not visible in the "closed and unlocked door" position, apply a finish paint (25) touch-up as per MTC Work Card 20.04.05.422.

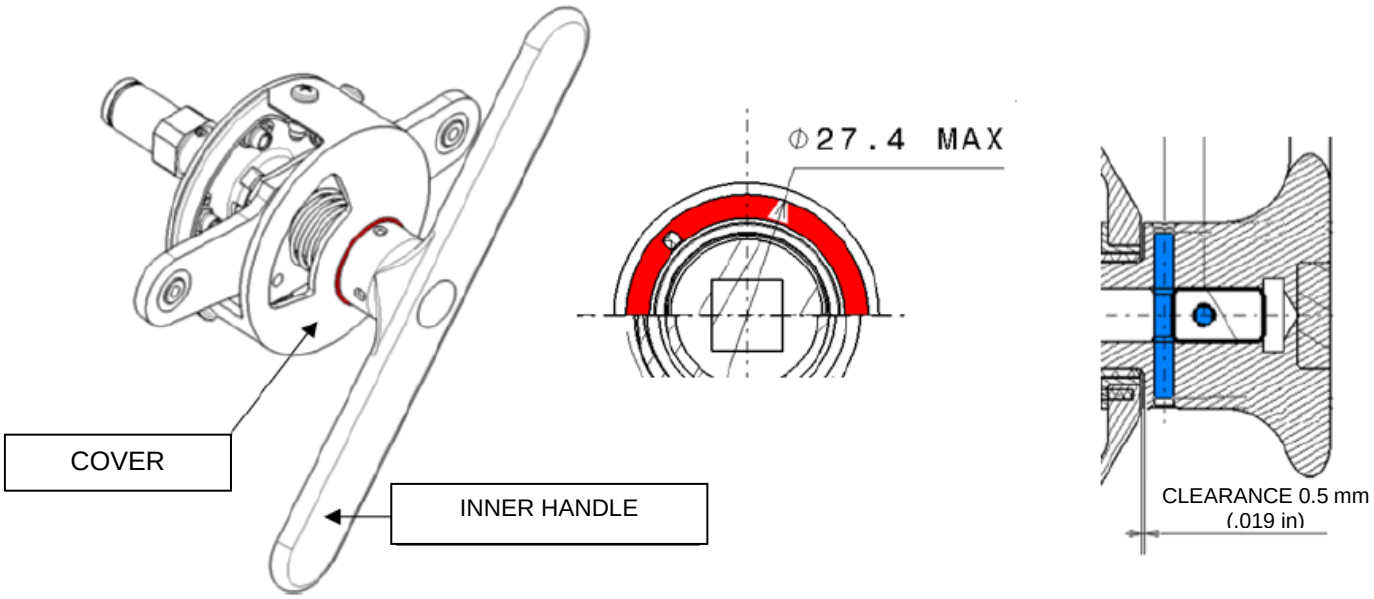

Check of the red visual indicator

CRITERION: When the green marks are aligned, the maximum tolerated clearance between inner handle and cover must be 0.5 mm (.019 in). The red visual indicator must not be visible.

4.A.2. Check

4.A.2.a. Check of the locking mechanism

4.A.2.a.1. Check of the inside marking

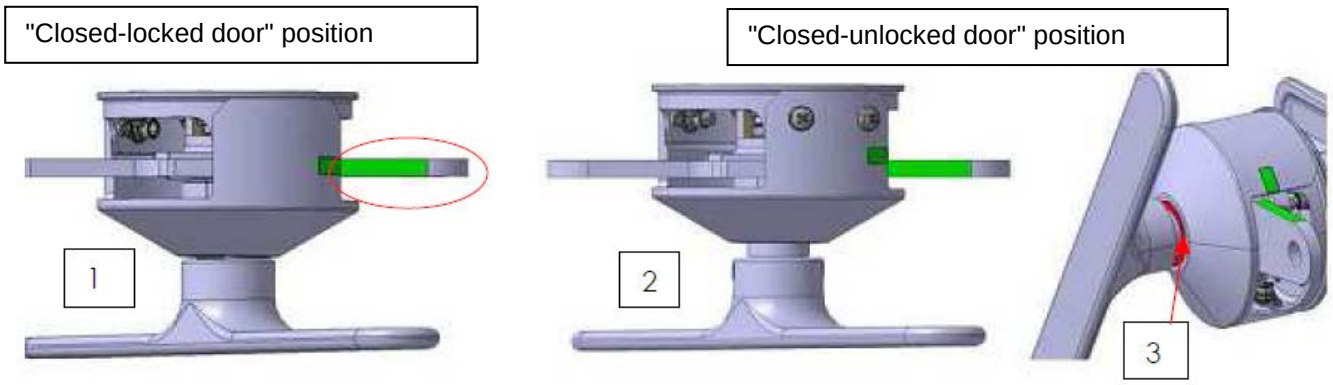

Visual checks of the locking mechanism closing (inner handle)

CRITERIA:

- **When the mechanism is in the "closed and locked door" position, the green visual indicators must be aligned (1).**
- **When the mechanism is in the "closed and unlocked door" position, the green visual indicators must be misaligned (2).**
- **When the mechanism is in the "closed and unlocked door" position, the red visual indicator is visible (3).**

4.A.2.a.2. Check of the outside marking

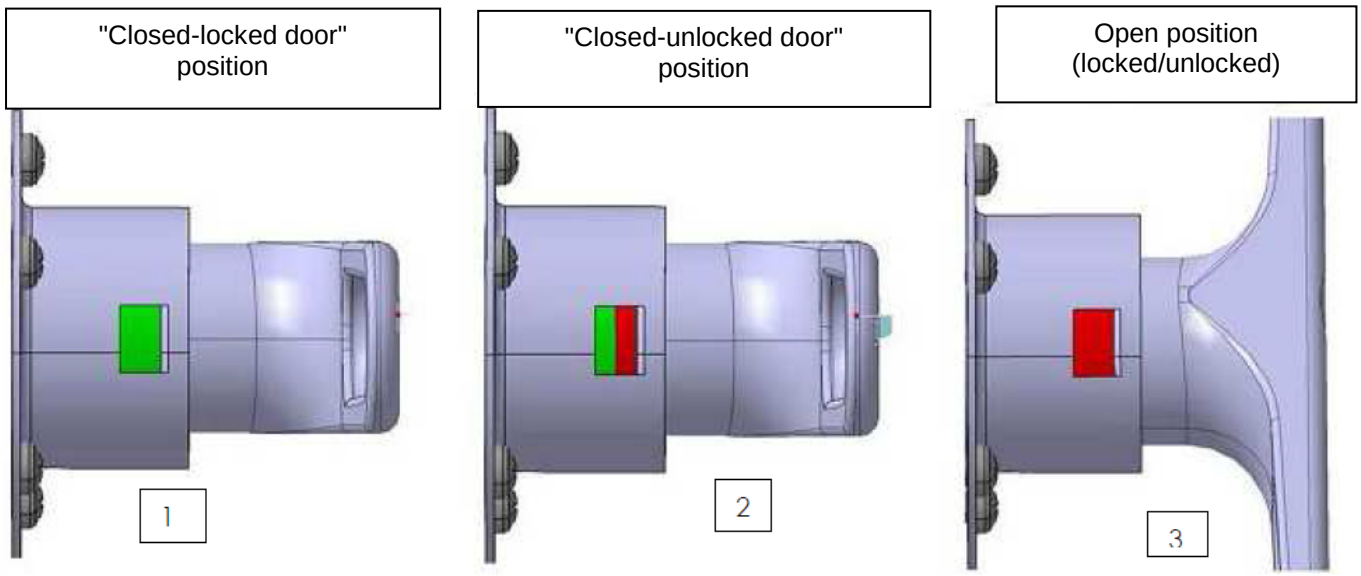

Visual checks of the locking mechanism closing (outer handle)

CRITERIA:

- **When the mechanism is in the "closed and locked door" position, only the green visual indicator must be visible (1).**
- **When the mechanism is in the "closed and unlocked" position, the green and red visual indicators must be visible (2).**
- **When the mechanism is in the "open door" position, only the red visual indicator must be visible (3).**

4.A.2.b. Check of the travel

- The mechanism unlocking travel must not be more than 6 mm (.236 in).

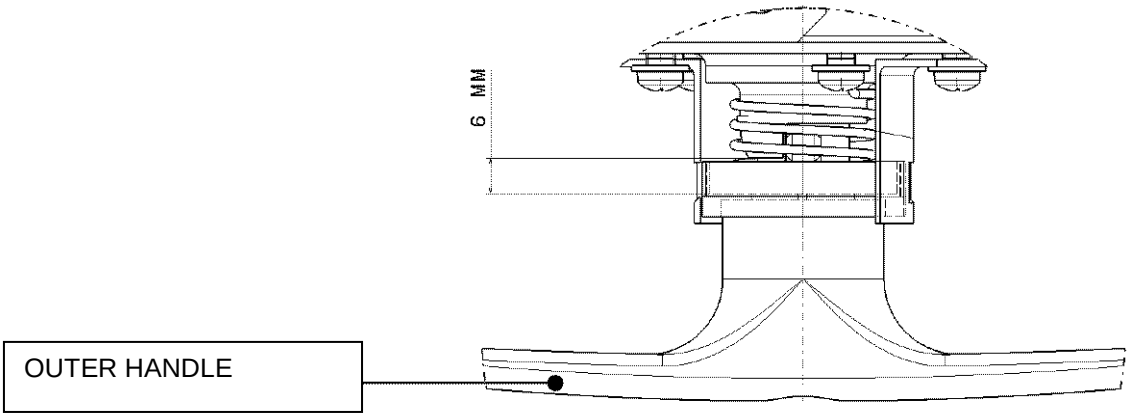

Mechanism travel

4.A.2.c. Check of the handle kinematics

- Once they are installed, the springs must favour the locking of the mechanism when actuating the handle.

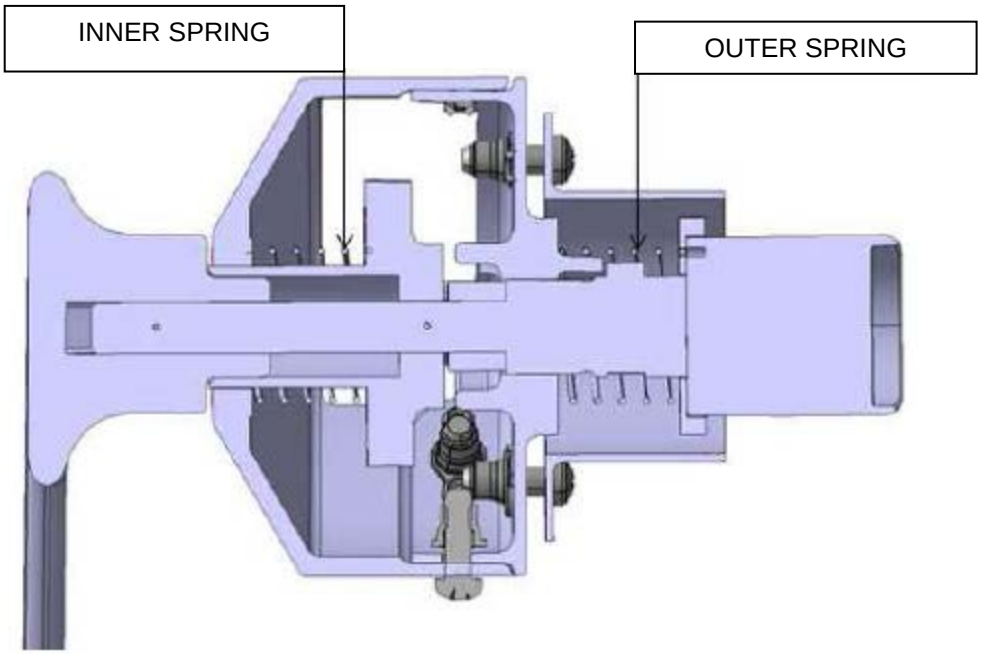

Visualization of the springs