SERVICE BULLETIN
REVISION TRANSMITTAL SHEET

AIRBUS
CUSTOMER SERVICES DIRECTORATE
1 Rond Point Maurice Bellonte
31707 BLAGNAC CEDEX
FRANCE
Tel : (33) 5 61 93 33 33
Telex : AIRBU 530526F
Fax : (33) 5 61 93 42 51

ATA SYSTEM: 53

TITLE: FUSELAGE - MAIN STRUCTURE - INTRODUCE COLD WORKING AT STOP FITTING FR66 / FR68

MODIFICATION No.: 156085G0974

This page transmits Revision No.01 of Service Bulletin No.A320-53-1290

ADDITIONAL WORK

****CONF ALL**

No additional work is required by this revision for aircraft modified by any previous issue.

REASON

Revision No. 01 issued to extend the effectivity of this Service Bulletin and to add West Coast Industries (WCI) as alternative supplier for cold working tools.

CHANGES

The main changes of this revision are:

- Effectivity extended
- Paragraph MATERIAL INFORMATION updated
  - . Procurement address updated
  - . Availability of Kit 531290C01R00 updated
  - . Standard tool TOOLC01 updated
  - . WCI added as an alternative supplier for cold working tools
- Figure A-SBAAA modified
  - . Diameter of the four stop fitting holes modified
- Minor changes applied.

Printed in FRANCE © AIRBUS S.A.S. 2007. All rights reserved.

SERVICE BULLETIN
REVISION TRANSMITTAL SHEET

FRONT MATTER		
FUSELAGE - MAIN STRUCTURE - INTRODUCE COLD WORKING AT STOP FITTING FR66 / FR68	CONFIGURATION UPDATED	R
SUMMARY		
REASON/DESCRIPTION/OPERATIONAL CONSEQUENCES	REASON UPDATED	R
MATERIAL PRICE INFORMATION	MATERIAL PRICE INFORMATION TABLE UPDATED	R
EFFECTIVITY	OPERATOR LIST UPDATED	R
REFERENCES / REPERCUSSIONS	REFERENCES/REPERCUSSIONS TABLE UPDATED	R
PLANNING INFORMATION		
EFFECTIVITY	EFFECTIVITY RELATED INFORMATION UPDATED	R
Configuration definition		
CONF 001	CONFIGURATION DEFINITION UPDATED	R
Material Effectivity	MATERIAL EFFECTIVITY UPDATED MATERIAL SET QUANTITY UPDATED MATERIAL SET UPDATED	R
REASON		
Objective/Action	OBJECTIVE/ACTION UPDATED	R
MANPOWER	MANPOWER UPDATED	R
	MANPOWER UPDATED CONFIGURATION UPDATED	R
REFERENCES	REFERENCED DOCUMENTATION UPDATED	R
PUBLICATION AFFECTED	PUBLICATIONS AFFECTED UPDATED	R
MATERIAL INFORMATION		
MATERIAL - PRICE AND AVAILABILITY		
Procurement Addresses	PROCUREMENT ADDRESSES UPDATED	R
Price and Availability	PRICE AND AVAILABILITY UPDATED MATERIAL AVAILABILITY UPDATED	R
TOOLING		
Tooling - Price and Availability		
Procurement Addresses	PROCUREMENT ADDRESSES UPDATED MATERIAL SET UPDATED	R
Price and Availability	PRICE AND AVAILABILITY UPDATED MATERIAL SET UPDATED	R
Tools	TOOLS UPDATED	R
Standard tool TOOLC01	TOOL MATERIAL SET UPDATED QUANTITY UPDATED TOOL UPDATED	R
Standard tool TOOLC02	TOOL MATERIAL SET ADDED	N
ACCOMPLISHMENT INSTRUCTIONS		
TASK 531290- 831-942-001-Modification	TASK SOLUTION UPDATED NOTE UPDATED	R

Printed in FRANCE © AIRBUS S.A.S. 2007. All rights reserved.

Subtask 531290-941-601-001	SUBTASK SOLUTION UPDATED NOTE UPDATED	R
Subtask 531290-020-601-001	SUBTASK SOLUTION UPDATED NOTE UPDATED CONFIGURATION UPDATED	R
Subtask 531290-020-602-001	SUBTASK SOLUTION UPDATED NOTE UPDATED CONFIGURATION UPDATED	R
Subtask 531290-831-601-001	SUBTASK SOLUTION UPDATED TOOL UPDATED REFERENCED DOCUMENTATION UPDATED NOTE UPDATED QUANTITY UPDATED CONFIGURATION UPDATED FIGURE REFERENCE UPDATED MATERIAL LIST UPDATED	R
Subtask 531290-831-602-001	SUBTASK SOLUTION UPDATED TOOL UPDATED REFERENCED DOCUMENTATION UPDATED NOTE UPDATED QUANTITY UPDATED CONFIGURATION UPDATED FIGURE REFERENCE UPDATED MATERIAL LIST UPDATED	R
Subtask 531290-831-603-001	SUBTASK SOLUTION UPDATED	R
Subtask 531290-831-604-001	SUBTASK SOLUTION UPDATED	R
Subtask 531290-942-601-001	SUBTASK SOLUTION UPDATED	R
Fig. A-SBAAA		
Fig. A-SBAAA Sheet 02	SHEET UPDATED	R

FILING INSTRUCTIONS

This Service Bulletin has been generated electronically and is reissued as a complete document. Replace the complete document.

Put this Revision Transmittal Sheet in front of the Service Bulletin.

HISTORY OF PREVIOUS REVISIONS

No previous revision

REVISION SEQUENCE

ORIGINAL: Oct 10/14

REVISION No. : 01 - Oct 03/16

Printed in FRANCE © AIRBUS S.A.S. 2007. All rights reserved.

This Page Intentionally Left Blank

Printed in FRANCE © AIRBUS S.A.S. 2007. All rights reserved.

SERVICE BULLETIN
SUMMARY

AIRBUS
CUSTOMER SERVICES DIRECTORATE
1 Rond Point Maurice Bellonte
31707 BLAGNAC CEDEX
FRANCE
Tel : (33) 5 61 93 33 33
Telex : AIRBU 530526F
Fax : (33) 5 61 93 42 51

This summary is for information only and is not approved for modification of the aircraft.

ATA SYSTEM: 53

TITLE: FUSELAGE - MAIN STRUCTURE - INTRODUCE COLD WORKING AT STOP FITTING FR66 / FR68

****CONF ALL**

MODIFICATIONS

MODIFICATION CLASSIFICATION					
MAJOR	None				
MINOR	156085G0974				

NOTE: As per EASA IR 21, a minor change is one that has no appreciable effect on the mass, balance, structural strength, reliability, operational characteristics affecting the airworthiness of the product. All other changes are major changes.

REASON/DESCRIPTION/OPERATIONAL CONSEQUENCES

Following inspection programs on in service aircraft cracks were detected at door stop fitting fasteners holes in Frame (FR) FR66 and FR68. To prevent this area from potential major repairs the fastener holes must be reinforced.

This Service Bulletin details the cold working of the fastener holes in the airframe structure for the door stop fittings installation in FR66 and FR68.

The procedure as described in this Service Bulletin is to be performed if no Airbus repair and/or repair improvement has been previously performed in the same area. In case of repairs performed previously, please contact AIRBUS Repair Support department for further instructions.

Accomplishment of this Service Bulletin will contribute to prevent further inspections and major repairs in the airframe structure of FR66 and FR68 stop fitting area.

The accomplishment of this Service Bulletin will increase the inspection interval requirements as per Inspection Service Bulletin 53-1288.

GENERAL EVALUATION

EVALUATION TABLE			
COMPLIANCE	RECOMMENDED (1)	CANCELS INSPECTION SB	NO
POTENTIAL AD	NO	A/C OPERATION AFFECTED	NO
RELIABILITY AFFECTED	NO	PAX COMFORT AFFECTED	NO

Printed in FRANCE © AIRBUS S.A.S. 2007. All rights reserved.

SERVICE BULLETIN
SUMMARY

EVALUATION TABLE			
COST SAVING	NO	ETOPS AFFECTED	NO
STRUCTURAL LIFE EXTN	NO	VENDOR SB INVOLVED	NO

NOTE (1): Service Bulletin recommended to be accomplished to prevent significant operational disruptions.

MATERIAL PRICE INFORMATION

MATERIAL PRICE INFORMATION TABLE			
MATERIAL SET	**QTY PER A/C**	**PRICE PER A/C (USD)**	**MAIN PARTS**
Kit 531290C01R00	2	1,220.00	Bolts, nuts
Standard tool TOOLC01	1	See SB	FTI tooling for cold expansion
Standard tool TOOLC02	1	See SB	WCI tooling for cold expansion

EFFECTIVITY

This Service Bulletin is applicable to this (these) operator(s) :

03Q	11S	13Y	15T	16T	17M	17R	17S	20Q	23R	27V	29S	31V
31X	32Q	36R	38W	40N	40S	41N	41S	43S	45O	46U	47P	48O
48P	52T	53Z	56O	59N	59Z	61W	66P	69X	73W	74T	76W	78X
79W	80X	81P	82U	83Q	85T	86P	86Z	87Q	89Q	89T	91X	95V
95W	96Q	98W	98X	AAF	AAL	AAR	AAW	AAY	ABL	ABQ	ABY	ACA
ACI	ADR	AEE	AFL	AFR	AHY	AIC	AIJ	ALK	AMC	AMU	ANA	ANR
ANZ	AOJ	APJ	ART	ARU	ASL	ASV	ATR	AUA	AUH	AVA	AWC	AWW
AXM	AZA	AZI	B2V	BAW	BEC	BEL	BER	BGF	BGH	BHP	BIE	BJN
BKP	BRS	BSX	BTK	BTN	BUC	C2C	CBG	CBJ	CCA	CCM	CDC	CEB
CEF	CES	CFG	CGH	CHB	CQH	CQN	CRK	CSA	CSC	CSN	CSZ	CTN
CTV	DAL	DAT	DCS	DKH	DLH	DNU	DQA	DRK	DTR	DWI	EAA	EDW
EIN	ELB	ETD	ETJ	EVA	EVE	EVJ	EWG	EZY	F2I	FCB	FFT	FHY
FIA	FIN	FJW	FLI	FRN	FTZ	G4I	G8E	GAF	GAP	GBB	GCA	GCR
GFA	GHT	GLG	GMI	GOW	GSW	GWI	GZQ	HDA	HFY	HIM	HKE	HKJ
HRM	HTU	HVN	HYP	I2L	I2T	IAW	IBE	IBS	IGO	IND	IRA	IRC
IRM	ISR	ISS	IYE	IZG	JAD	JAS	JAV	JBU	JBW	JJP	JSA	JST
JZR	KAC	KAY	KFR	KHO	KHV	KKK	KNE	KPM	KZR	LAA	LAN	LAO
LBT	LFO	LIM	LJB	LKE	LLC	LLM	LLP	LLX	LMJ	LMU	LUR	LWA
LZB	MAC	MAU	MEA	MJF	MJN	MLD	MLM	MLR	MMA	MON	MOV	MRJ
MSC	MSR	MXA	MYX	NIA	NKS	NLY	NMA	NMB	NVD	NVR	NWS	OAW
OBS	OHY	OLY	OMS	ONE	ORF	OTF	OZW	PAL	PGT	PIA	PIC	PKZ
PTI	QAF	QDA	QSM	QTR	R1T	RBA	RBG	RCT	RFJ	RJA	RJD	RNA
ROT	RYW	RZO	SAA	SAI	SAS	SBI	SDM	SEY	SFJ	SFW	SGD	SGQ
SHJ	SHU	SKU	SLK	SND	SNG	SNX	SOL	SSG	SUD	SVA	SVR	SVW
SWM	SWR	SYR	TAE	TAI	TAM	TAP	TAR	TBA	TBJ	TBZ	TCW	TCX
TDR	TGW	THD	THY	TJS	TNA	TTW	UAE	UAL	UEA	UJX	UKN	UNA
USA	UZB	VAR	VAX	VIM	VIP	VIV	VJC	VKG	VLG	VNL	VOE	VOI
VRD	VRE	VTI	VVC	WGT	WHT	WOW	WRC	WZZ				

CONCURRENT REQUIREMENTS

Accomplishment of this Service Bulletin requires the prior or simultaneous accomplishment of the following Service Bulletin as per effectivity specified in this Service Bulletin:

Printed in FRANCE © AIRBUS S.A.S. 2007. All rights reserved.

SERVICE BULLETIN
SUMMARY

Service Bulletin No. A320-53-1288

NOTE: Service Bulletin No. A320-53-1288 (FUSELAGE - REAR FUSELAGE - INSPECTION OF THE DOOR STOP FITTING HOLES AT FR66 AND FR68 LHS/ RHS).

REFERENCES / REPERCUSSIONS

TFU	None
OEB	None
AOT	None
SIL	None
ISI	00.00.00198 51.48.00001
LINE MAINTENANCE AFFECTED	No
LIFE LIMIT	None
OTHER	None

NATURE OF THE WORK

AIRCRAFT	YES
EQUIPMENT	NO
HARD	NO
SOFT	NO
OBRM	NO

MANPOWER

Task 531290-831-942-001: Modification	
TOTAL MANHOURS	27.00
ELAPSED TIME (HOURS)	14.00

APPENDICES

Appendix 01 - Elapsed Time Assumption.

Printed in FRANCE © AIRBUS S.A.S. 2007. All rights reserved.

**CONF ALL

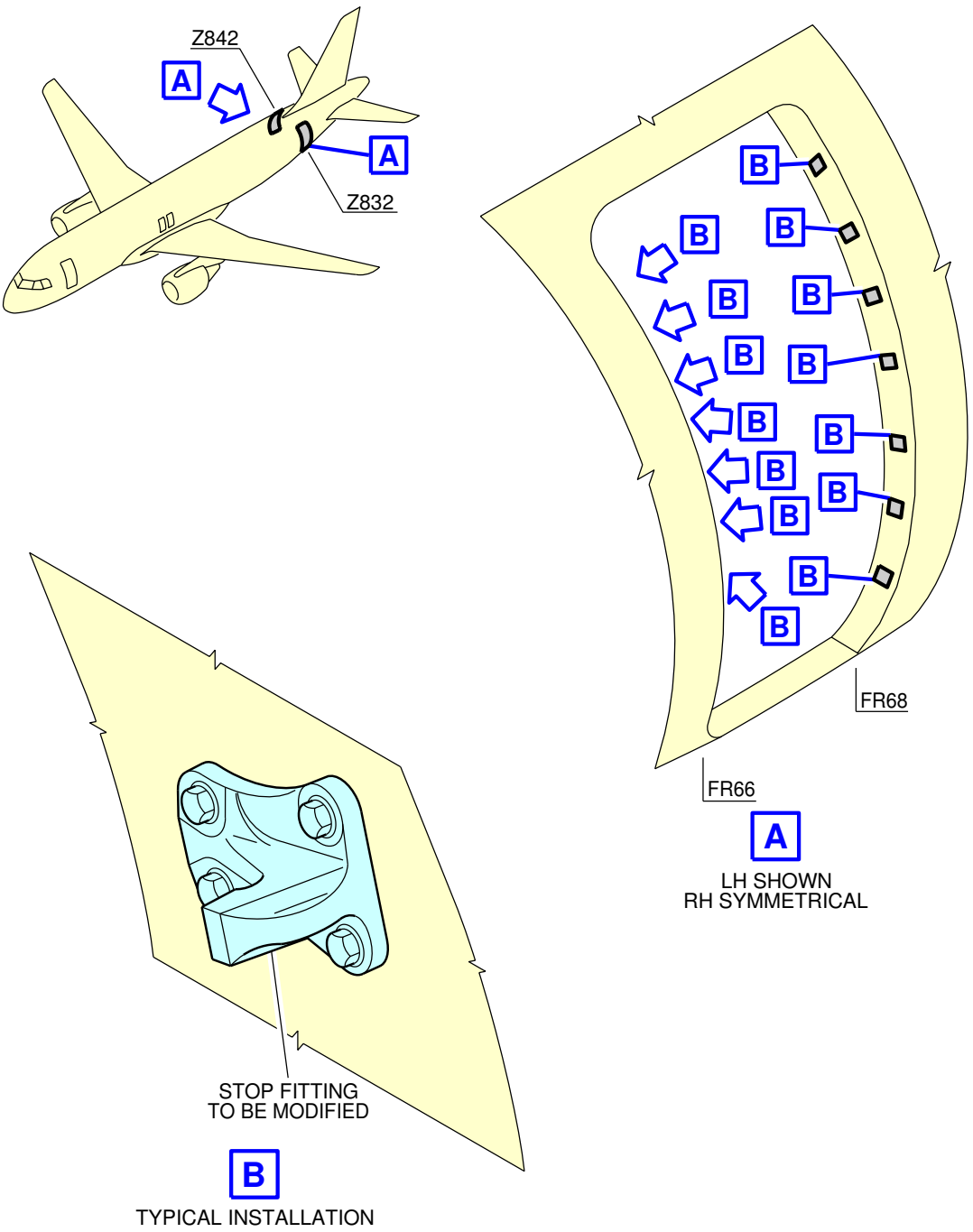

N_SB_531290_0_SAAA_01_00

Figure A-SSAAA - Sheet 01

Printed in FRANCE © AIRBUS S.A.S. 2007. All rights reserved.

AIRBUS
CUSTOMER SERVICES DIRECTORATE
1 Rond Point Maurice Bellonte
31707 BLAGNAC CEDEX
FRANCE
Tel : (33) 5 61 93 33 33
Telex : AIRBU 530526F
Fax : (33) 5 61 93 42 51

ATA SYSTEM: 53

TITLE: FUSELAGE - MAIN STRUCTURE - INTRODUCE COLD WORKING AT STOP FITTING FR66 / FR68

MODIFICATION No.: 156085G0974

This document contains AIRBUS PROPRIETARY INFORMATION and shall at all times remain the property of AIRBUS; no intellectual property right or licence is granted by AIRBUS in connection with any information contained in it. It is delivered on the express condition that said document and the information contained in it shall be treated as confidential, shall not be used for any purpose other than that for which it is hereby delivered. It shall not be disclosed in whole or in part to third parties and shall not be duplicated in any manner (except for the purposes of performing the tasks described hereunder and provided that any recipient of such document shall comply with the conditions herein), without AIRBUS prior written consent.

1. PLANNING INFORMATION

****CONF ALL**

A. EFFECTIVITY

NOTE: This modification is applicable by Service Bulletin only.

NOTE: This Service Bulletin is only applicable to aircraft on which MOD No.157039G1034 (INTRODUCE COLD WORKING AT STOP FITTING FR66/FR68 (SERIES SOLUTION)) is not embodied.

(1) Models

318-111	318-112	318-121	318-122	319-111	319-112	319-113	319-114
319-115	319-131	319-132	319-133	320-211	320-212	320-214	320-216
320-231	320-232	320-233	321-111	321-112	321-131	321-211	321-212
321-213	321-231	321-232					

(2) Effectivity by MSN

0029 0045-0046 0049-0057 0059 0064-0073 0076-0078 0081-0087 0093-0094 0099
0104 0110-0113 0115-0119 0121-0127 0135 0137-0138 0140-0142 0148-0150
0152-0154 0157-0162 0164-0166 0168-0169 0171-0175 0178 0181-0183 0185 0192
0194-0195 0197-0198 0200-0203 0205-0211 0213 0216-0220 0224 0229-0232 0234
0237 0239 0242-0244 0248-0249 0251-0256 0259-0260 0262-0263 0265-0269
0272-0273 0275-0277 0279 0281-0282 0284-0285 0287 0289-0298 0300-0303
0306-0309 0311-0312 0314 0316-0322 0324-0325 0328-0332 0339-0343 0345-0347
0350-0351 0353-0362 0364 0366-0368 0370-0373 0376 0378 0380-0383 0385-0388

Printed in FRANCE © AIRBUS S.A.S. 2007. All rights reserved.

0390 0393 0395 0398-0410 0412 0414-0418 0420-0424 0426-0432 0434-0436
0438-0439 0441-0442 0444-0445 0447-0450 0452 0454 0456-0458 0460 0462-0466
0468 0470 0472-0477 0479-0480 0482-0491 0493 0495-0514 0516-0535 0537-0546
0548-0556 0558-0587 0589 0591-0593 0595-0600 0603-0604 0607-0614 0616-0623
0625 0627 0629-0631 0633-0662 0664-0673 0675-0706 0709 0711-0752 0754-0771
0773-0788 0790-0798 0800-0898 0900-0955 0957-0977 0979-1043 1045-1067
1069-1073 1075-1097 1099-1112 1114-1185 1187-1217 1219-1277 1279-1304
1306-1332 1334-1373 1375-1463 1465-1607 1609-1659 1661-1675 1677-1697
1699-1726 1728 1730-1767 1769-1812 1814-1821 1823-1829 1831-1918 1920-1929
1931-1938 1940-1984 1986-1990 1993-2016 2018-2024 2026-2050 2052-2057
2059-2110 2112-2127 2129-2217 2219-2275 2277-2423 2425-2499 2501-2721
2723-3037 3039-3091 3093-3109 3111-3162 3164-3243 3245-3647 3649-4329
4331-6100 6102-6285 6287-6418 6420-6463 6465-6619 6622-6641 6643-6672
6674-6697 6699-6700 6739

(3) Effectivity by Operator

The Operator/MSN relationship is provided for information only and is correct at the time of issue in accordance with the information available to AIRBUS. Any future changes resulting from transfer of an aircraft from one operator to another will not be reflected in this list unless the Service Bulletin is revised for another reason.

OPERATOR	MSN
03Q	0584 0620 0770
11S	4211
13Y	0371
15T	0764 1494 2910 3261
16T	4024 4679
17M	5445
17R	5768
17S	3333
20Q	4842
23R	1730
27V	3826
29S	0291 0292
31V	0164 0293 0332 0420 0436 0565 0579 0591 0855 0932 0943 0992 1048
31X	4319
32Q	1228 1283
36R	1747 1818
38W	1194
40N	0065 0077
40S	1973
41N	3164
41S	0630
43S	4650
45O	3402 5040
46U	2906 2952 2982 3275 3296 3332 3674 3734 3986 4053 5218 5900 6032
47P	0619

Printed in FRANCE © AIRBUS S.A.S. 2007. All rights reserved.

OPERATOR	MSN
48O	3362 3412
48P	2192
52T	1599
53Z	1468
56O	1285
59N	1589
59Z	1556
61W	0112
66P	0368
69X	0219 0300 0328
73W	0087
74T	2165 4768
76W	0140 0157
78X	1081
79W	3751
80X	2748
81P	0308
82U	0279 0677 0891
83Q	0477 0495
85T	0234
86P	0913
86Z	1706 1750
87Q	0052
89Q	0427 0747
89T	3356
91X	2837
95V	3379
95W	2949 4199
96Q	5182
98W	0434 0441 0516 0524
98X	0551
AAF	0639 2180 2870 3136 3242 3289 4268 4589 4675 6012
AAL	5327 5678 5698 5704 5745 5753 5761 5781 5786 5788 5789 5798 5810 5827 5834 5842 5860 5884 5895 5904 5932 5938 5946 5955 5975 5983 5991 6020 6040 6046 6063 6070 6085 6094 6150 6154 6162 6222 6227 6238 6252 6256 6263 6271 6272 6277 6310 6313 6334 6346 6349 6384 6393 6401 6407 6429 6437 6456 6472 6473 6482 6491 6495 6520 6532 6552 6595 6644 6647 6650 6656 6667 6687
AAR	0802 1174 1356 1511 2247 2397 2459 3297 3437 3483 3496 3641 3873 4112 4142 5169 5173 5287 5350 5382 5462 5500 5636 5767 5774 6299 6395
AAW	3224 3236 3615 3657 4004 4521 5414 5448
AAY	0706 0714 0716 0730 0745 1108 1229 1255 1262 1288 1292 1318 1347 1467 1530 1540 1694 2224 2265 2271 2319 2387 2398 2420 2427 2450 2556 2586 2702 2709 2729 2821

Printed in FRANCE © AIRBUS S.A.S. 2007. All rights reserved.

OPERATOR	MSN
ABL	1227 1636 1670 1734 1970 2041 2045 2110 2226 2290 2422 2430 2732 2808 2840 2943
ABQ	3974 5891 5943 5966 6016 6067 6119
ABY	4468 4524 4806 4848 4890 4958 5017 5276 5307 5423 5452 5502 5576 5718 5772 5889 5903 5984 6000 6054 6080 6166 6176 6234 6293 6365 6430 6444 6481 6553 6665
ACA	0059 0068 0073 0084 0122 0126 0127 0141 0149 0150 0154 0159 0174 0175 0183 0210 0231 0232 0242 0248 0253 0254 0255 0265 0277 0284 0290 0309 0324 0330 0341 0378 0403 0404 0546 0572 0634 0656 0670 0672 0682 0688 0691 0693 0695 0697 0711 0719 0721 0728 0732 0736 0740 0742 0752 0757 0769 0773 0779 0785 0800 0813 0817 0829 0831 0840 0845 1299 1562 1577 1602 1611 1623 1632 1638 1673 1691 1719 1726 1742 1748 1772 1783 1787 1811 1853 1864 1874 1940 1975 2018 2145 3051 3401 3884
ACI	2152 3547
ADR	1000 4282 4301
AEE	1428 1433 1856 1909 1996 2468 2828 3033 3066 3074 3162 3302 3316 3322 3365 3392 3423 3439 3462 3478 3484 3519 3526 3527 3709 3714 3745 3748 3753 3773 3785 3812 3820 3829 3850 3878 3990 4065 4094 4165 6611 6643 6655
AFL	2106 2116 2133 2144 2330 2337 2875 2920 2947 2965 3052 3063 3157 3267 3334 3373 3410 3511 3545 3574 3627 3631 3640 3644 3699 3711 3778 3786 3789 3823 3835 3923 3954 4058 4074 4099 4103 4116 4133 4148 4160 4453 4461 4498 4500 4579 4625 4649 4656 4684 4692 4712 4835 5044 5059 5271 5421 5536 5565 5572 5578 5580 5585 5614 5720 5755 5790 5873 5881 5913 5921 5967 5970 5974 5982 5989 6017 6022 6043 6044 6060 6071 6090 6678
AFR	0115 0237 0239 0287 0498 0509 0521 0529 0544 0598 0600 0608 0618 0625 0637 0777 0796 0985 1020 1025 1036 1133 1151 1169 1176 1190 1201 1216 1267 1271 1344 1404 1415 1444 1449 1471 1476 1502 1505 1524 1616 1622 1640 1645 1658 1677 1699 1733 1859 1879 1894 1900 1924 1938 1949 2035 2059 2071 2081 2100 2109 2140 2317 2344 2350 2456 2582 2601 2686 2705 2716 2721 2750 2918 2938 2951 2961 2967 2972 3008 3009 3098 3372 3399 3419 3420 3441 3470 3777 3795 3814 3825 3859 3930 4063 4084 4105 4137 4139 4241 4251 4267 4295 4298 4335 4402 4601 4604 4664 4714 4747 4800 4820 4901 4908 5084 5129 5719 5802 5869
AHY	0331 2487 2516 2588 2685 2788 2846 2853 2865 2991 3006 6285
AIC	0045 0046 0049 0050 0051 0056 0057 0398 0416 0423 0431 0432 0486 0490 0499 2593 2624 2629 2907 3130 3146 3212 3271 3288 3300 3305 3326 3340 3344 3367 3498 3551 3557 3573 3619 3620 3687 3752 3792 3822 3874 3918 3955 3970 4002 4009 4020 4029 4052 4078 4089 4096 4121 4138 4155 4164 4201 4212 4236 4237 4280 6446 6690
AIJ	0169 1132 1162 1179 1244 1259 1308 1322 1780 2048 2227 2539 2930 2964 3021 3044 3123 3149 3160 3286 3304 3312 3374 3508 3514 3667 3690 4235 4304 4411 4730 4733 4924 4933 5163 5221 5358 5372 5653 5665 5867 5878 5933
ALK	2345 2584 3397 3636 4694 4869 4915 5086
AMC	2189 2291 2332 2382 2665 2768 3056 3068

Printed in FRANCE © AIRBUS S.A.S. 2007. All rights reserved.

OPERATOR	MSN
AMU	0631 0908 1758 1790 1850 1912 1926 1962 4197 5352 5459 5523 6324 6517
ANA	0383 0482 0501 0507 0531 0534 0549 0554 0658 0669 0685
ANR	0671 0726 0765
ANZ	2085 2090 2112 2130 2148 2153 2173 2257 2297 2445 2533 2594 2663 4553 4584 4884 4926 5629 5682 5847 5962 5993 6182 6460 6471 6533 6694
AOJ	4503
APJ	4887 4936 5015 5166 5304 5384 5440 5540 5640 5724 5874 6004 6107 6335 6640 6674
ART	0244 0359 0533 0566 0662 0936 0984 1823 1873 2211 2233
ARU	0573 0582 0805
ASL	1140 1159 2277 2296 2335 2587 2621 2645 3252 3317
ASV	5035
ATR	0314 0373 0393
AUA	0552 0570 0581 0768 0776 0797 0920 0935 1137 1150 1189 1385 1387 1458 1478 1504 1553 1678 1735 1931 1937 2009 2131 2174 2262 2416 2494 2547 2652
AUH	2403
AVA	1634 2328 2333 2358 2367 2377 2394 2523 2544 2552 2575 2662 3467 3518 3647 3664 3691 3961 3980 3988 3992 4001 4011 4026 4046 4051 4100 4167 4200 4281 4284 4345 4381 4567 4599 4763 4789 4821 4862 4939 5057 5119 5195 5360 5398 5454 5477 5622 5632 5840 5944 6138 6153 6167 6174 6209 6219 6399 6411 6511 6617 6692 6739
AWC	2564 2791 3830 4701
AWW	0597
AXM	0667 0743 0872 0874 1286 2137 2147 2162 2183 2425 2612 2633 2656 2683 2699 2760 2816 2826 2842 2881 2885 2956 2989 3000 3018 3064 3117 3140 3154 3173 3182 3194 3201 3223 3232 3277 3291 3299 3327 3338 3353 3370 3394 3404 3427 3448 3477 3486 3489 3505 3521 3536 3549 3568 3576 3582 3610 3628 3679 3701 3715 3729 3765 3776 3813 3875 3963 3997 4019 4035 4070 4079 4088 4098 4126 4147 4263 4278 4293 4302 4333 4346 4361 4367 4386 4390 4404 4426 4458 4462 4477 4486 4557 4571 4582 4793 4797 4807 4882 4889 4917 4964 4969 4979 4980 4989 5098 5137 5149 5153 5165 5200 5215 5272 5283 5325 5344 5347 5353 5359 5397 5420 5428 5430 5431 5468 5505 5547 5593 5619 5627 5657 5703 5706 5762 5812 5824 5839 5846 5851 5863 5866 5888 5897 5905 5908 5914 5918 5959 6015 6034 6048 6064 6075 6084 6088 6096 6105 6145 6158 6170 6178 6240 6262 6405 6428 6676
AZA	0513 0514 0526 0532 0576 0583 0586 0593 0599 0819 0848 0940 0951 0959 1138 1168 1217 1220 1226 1448 1457 1473 1480 1489 1722 1740 1745 1770 1779 2033 2057 2074 2083 2086 2101 2127 2869 2932 2995 3076 3079 3115 3138 3161 3343 3563 3598 3609 3643 3666 3695 3732 3815 3846 3885 3906 3921 3956 3976 3978 4075 4108 4119 4143 4152 4195 4249 4520 4523 4536 4759 4764 4859 4875 4910 5018 5130 5294 5383 5424
AZI	0527

Printed in FRANCE © AIRBUS S.A.S. 2007. All rights reserved.

OPERATOR	MSN
B2V	0185
BAW	1014 1082 1115 1118 1142 1177 1193 1197 1222 1225 1232 1236 1239 1258 1261 1279 1295 1329 1338 1380 1384 1418 1423 1424 1440 1445 1466 1482 1509 1510 1513 1529 1537 1558 1574 1590 1594 1604 1606 1613 1661 1665 1672 1687 1689 1690 1696 1708 1711 1754 1760 1771 1782 1804 1814 1829 1834 1871 1883 1892 1899 1902 1907 1910 1958 1987 2038 2040 2098 2188 2190 2194 2305 2320 2323 2324 2351 2363 2389 2429 2441 2466 2536 2653 2694 2697 2720 2799 2981 3049 3081 3089 3235 3254 3290 3301 3314 3351 3468 3499 3512 3550 3607 3649 3697 3703 3721 3726 3912 3926 4007 4039 4185 4238 4265 4306 4464 4551 4725 4791 4975 5634 5784 5856 5948 5985 6028 6091 6129 6155 6290
BEC	3199 5538
BEL	1086 1102 1160 1336 1388 1441 1493 1759 1797 1803 1838 1885 1963 2030 2114 2196 2207 2230 2392 2400 2700 2763 2810 2925 3255 3790 3895 4243 4275
BER	1629 1717 1769 1775 1852 1889 1961 1966 1988 1994 2003 2005 2562 2591 2606 2627 3055 3080 3121 3178 3202 3213 3295 3328 3464 3482 3502 3515 3516 3532 3540 3700 3704 3708 3749 3865 3945 4013 4101 4161 4269 4291 4329 4334 4433 4510 4565 4728 5038 5126 5133 6168 6432 6454 6501 6629 6639
BGF	3188
BGH	0142 1087 1554 2844 2863 3125 3139
BHP	2968 3245 3422 3604 4033 4187 4294 4631
BIE	0519 0827
BJN	3617 4956
BKP	2254 2273 2310 2362 2366 2417 2509 2531 2600 2634 2648 2660 2664 2783 3421 3424 3454 3694 3759 3911
BRS	2263
BSX	0648 0650
BTK	6164 6280 6309 6356 6361 6372 6505 6628 6695 6697
BTN	1541 1551
BUC	0256
C2C	5023 5088 5907
CBG	6204 6215
CBJ	2557 2561 2611 2644 2733 2985 3285 3520 3548 3561 3578 3580 3638 3842 3851 3914 3958 3982 4388 4410 4412 4428 4440 4471 4483 4505 4513 4529 4540 4580 4602 4677 5008 5072 5114 5185 5216 5331 5471 5630 5656 5722 5848 5997 6041 6198 6206 6212 6229 6426 6480 6580 6664

Printed in FRANCE © AIRBUS S.A.S. 2007. All rights reserved.

OPERATOR	MSN
CCA	0876 0921 1296 2000 2007 2015 2172 2202 2205 2237 2269 2285 2293 2298 2454 2499 2508 2525 2532 2545 2551 2559 2614 2643 2805 2819 2839 2847 2890 3195 3200 3215 3221 3226 3250 3307 3329 3337 3461 3506 3523 3601 3623 3653 3655 3665 3678 3722 3725 3766 3806 3940 3973 4022 4031 4062 4091 4131 4180 4221 4283 4317 4318 4348 4377 4472 4473 4494 4538 4566 4593 4617 4719 4771 4775 4803 4829 4834 4873 4895 4900 4949 4963 4985 4997 5014 5032 5054 5091 5124 5174 5199 5265 5346 5386 5419 5432 5435 5568 5573 5600 5664 5690 5743 5771 6013 6159 6169 6196 6239 6251 6273 6283 6308 6319 6354 6466 6514 6567 6579 6603 6641 6699
CCM	3325 3882 3952 5887 5906
CDC	6026 6055 6065 6157 6600 6648 6671 6679
CEB	2625 2638 2786 2790 2831 2852 2876 2994 3048 3272 3762 3767 4447 4508 4537 4574 4852 4861 4870 4927 4993 5045 5067 5250 5320 5381 5442 5498 5669 5687 5917 5934 6021 6051 6317 6325 6418 6441
CEF	2801 3085
CES	0665 0754 0838 0854 0897 0909 0925 0939 1028 1030 1070 1072 1093 1303 1312 1316 1330 1345 1357 1361 1377 1386 1532 1542 1601 1639 1906 1911 1964 1981 2022 2034 2036 2049 2056 2068 2219 2221 2235 2239 2244 2309 2315 2437 2451 2478 2493 2498 2543 2549 2693 2757 2825 2882 2895 3168 3170 3186 3197 3233 3247 3249 3262 3471 3481 3559 3593 3611 3612 3613 3639 3650 3677 3682 3692 3716 3775 3793 3797 3870 3904 3929 3937 3965 3969 4027 4037 4043 4045 4111 4144 4186 4198 4209 4220 4239 4240 4252 4297 4309 4340 4342 4355 4374 4423 4627 4638 4659 4685 4702 4709 4711 4718 4722 4723 4729 4746 4748 4765 4769 4776 4799 4831 4844 4857 4877 4886 4903 4938 4946 4967 4987 5047 5048 5053 5063 5135 5136 5144 5156 5192 5210 5227 5242 5267 5273 5309 5326 5330 5338 5363 5376 5380 5402 5412 5439 5461 5481 5508 5516 5519 5524 5527 5558 5575 5623 5628 5668 5691 5700 5705 5710 5711 5726 5735 5759 5770 5823 5826 5852 5864 5886 5920 5942 5973 5998 6052 6062 6089 6111 6116 6127 6137 6144 6151 6160 6180 6191 6199 6203 6213 6228 6250 6258 6260 6269 6274 6284 6298 6305 6307 6323 6340 6355 6368 6373 6379 6396 6431 6453 6469 6499 6519 6578 6582 6593 6624 6630 6649 6661 6668 6688
CFG	0774 0809 0884 0894 0905 0957 0971 1416 1437 1607 5969 6053 6376 6459 6590 6615
CGH	3768 3849 4522
CHB	4231 4262 4452 4482 4569 4644 4686 4687 4995 5105 5246 5626 5679 5740 5912 6023 6076 6120 6237 6492
CQH	2939 3014 3023 3747 3819 4072 4093 4168 4244 4331 4366 4373 4375 4499 4586 4738 4750 4760 4809 4816 4909 4978 4983 5022 5051 5108 5378 5403 5434 5446 5466 5562 5778 5816 5911 6073 6117 6216 6218 6220 6231 6318 6329 6358 6403 6410 6452 6497 6524 6591
CQN	0696 0698 0704 0705 3828 3836 3876 3901 3903 3941 4140 5645 5713 5930

Printed in FRANCE © AIRBUS S.A.S. 2007. All rights reserved.

OPERATOR	MSN
CRK	5147 5189 5416 5514 5544 6003 6246 6442
CSA	3043 3094 3406 3436 3452 3660 3892 4258 4713
CSC	0540 0556 0878 0915 0919 1013 2313 2348 2431 2510 2534 2597 2639 3114 3116 3124 3158 3167 3196 3210 3386 3449 3583 3591 3680 3730 3893 3962 3996 4018 4068 4288 4326 4378 4420 4424 4525 4575 4619 4642 4660 4707 4731 4824 4830 4856 4905 4911 4923 5041 5121 5141 5160 5197 5208 5233 5286 5303 5389 5470 5543 5609 5646 5647 5650 5670 5765 5868 5896 5910 5937 5953 5964 5977 6008 6030 6148 6303 6316 6339 6367 6369 6386 6397 6402 6421 6475 6486 6540 6581 6635 6654 6677
CSN	0712 0718 0720 0722 0849 0859 0881 0895 0900 0950 0966 1035 1039 1057 1596 1614 1776 1788 1971 1974 1986 1995 2004 2008 2067 2080 2200 2203 2232 2354 2361 2371 2408 2426 2435 2484 2505 2506 2511 2519 2521 2530 2541 2546 2554 2555 2558 2574 2579 2637 2680 2689 2701 2708 2713 2714 2741 2743 2759 2767 2770 2772 2796 2809 2824 2834 2855 2861 2877 2899 2901 2915 2936 2940 2948 2950 2960 2969 2971 2986 3020 3067 3075 3112 3144 3217 3241 3251 3258 3269 3311 3342 3459 3493 3507 3552 3566 3587 3645 3681 3764 3784 3847 3860 3867 3890 3910 3920 3934 3938 3951 3959 3981 3983 3999 4003 4017 4036 4038 4071 4172 4184 4189 4194 4205 4217 4224 4225 4230 4232 4248 4260 4266 4271 4274 4279 4290 4292 4299 4322 4325 4338 4341 4350 4362 4365 4369 4370 4387 4396 4416 4430 4456 4507 4550 4613 4671 4696 4751 4782 4794 4808 4836 4854 4864 4880 4883 4912 4919 4928 4982 5061 5151 5168 5170 5183 5202 5214 5225 5237 5268 5279 5288 5410 5480 5484 5503 5506 5534 5561 5564 5579 5602 5611 5655 5671 5693 5730 5736 5750 5756 5797 5817 5832 5837 5875 5890 5945 5949 5976 6018 6049 6078 6104 6106 6146 6186 6205 6211 6233 6241 6261 6366 6385 6440 6461 6462 6504 6506 6530 6551 6556 6612 6645
CSZ	2672 2684 2841 2905 2909 2935 2973 2980 3131 3132 3153 3206 3366 3383 3435 3440 3456 3528 3599 3696 3698 3756 3848 3855 3887 3898 3935 3971 4010 4028 4159 4176 4208 4214 4226 4300 4359 4407 4409 4435 4474 4514 4531 4620 4633 4666 4726 4845 4866 4876 4897 4920 4929 4977 4986 5002 5082 5110 5176 5369 5521 5550 5589 5639 5731 5766 5986 6019 6197 6217 6564 6686
CTN	0767 0833 1009 1029 1237 1252
CTV	0839 0892 1635 2598 2692 3147 3148 3861 4961 5351 5379 5394 5399 5415 5511 5541 5551 5556 5560 5571 5574 5597 5777 5830 6118 6207 6224 6243 6270 6322 6333 6408 6434 6503 6596

Printed in FRANCE © AIRBUS S.A.S. 2007. All rights reserved.

OPERATOR	MSN
DAL	0118 0121 0125 0152 0153 0160 0171 0192 0197 0206 0208 0213 0262 0263 0272 0273 0281 0282 0297 0298 0306 0307 0318 0319 0329 0339 0340 0355 0358 0360 0367 0372 0380 0381 0387 0388 0399 0408 0410 0417 0418 0766 0778 0786 0801 0807 0818 0830 0832 0846 0903 0907 0911 0923 0962 0964 0981 0988 0996 1011 1037 1058 1062 1191 1230 1249 1324 1325 1346 1392 1414 1434 1453 1456 1483 1498 1501 1520 1535 1543 1549 1567 1570 1582 1633 1641 1646 1659 1662 1683 1685 1693 1709 1714 1738 1746 1752 1766 1774 1789 1796 1800 1810 1812 1815 1820 1824 1828 1833 1839 1875 1897 1923 1959 1976 1982 1990 2002 2013 2026 2039 2047 2082 2087 2092 2095
DAT	0466 2957
DCS	1053 3243
DKH	2975 3027 3234 3268 3368 3485 3596 3605 3967 3984 4064 4102 4154 4276 4401 4429 4573 4587 4652 4833 4840 4981 5013 5070 5071 5131 5226 5329 5339 5455 5491 5674 5737 5876 6172 6221 6315 6392 6433 6435 6477 6542 6627 6637
DLH	0069 0070 0071 0072 0078 0083 0086 0093 0094 0104 0110 0111 0116 0162 0172 0202 0412 0458 0468 0473 0474 0484 0493 0502 0505 0518 0560 0563 0564 0567 0595 0609 0610 0616 0623 0627 0636 0641 0651 0652 0679 0689 0692 0694 0699 0700 0717 0723 0729 0738 0744 0853 0860 0875 0887 0901 1080 1161 1188 1214 1260 1273 1337 1365 1367 3265 3339 3360 3387 3434 3592 3625 3864 3936 3987 4005 4016 4047 4054 4073 4085 4097 4120 4141 4153 4182 4191 4261 4289 4324 4332 4360 4363 4398 4449 4455 4511 4545 4560 4585 4607 4626 4672 4710 4753 4792 4796 4819 4841 4881 4916 4976 4994 5028 5049 5087 5122 5181 5186 5203 5239 5284 5293 5413 5425 5441 5487 5694 5741 5769 5831 5935 5972 6006 6033 6092 6141 6202 6225 6265 6301 6415 6423 6451 6521 6549 6577 6636
DNU	0113 0406
DQA	2347 2599
DRK	2306 2346 6496
DTR	0444 0447 2102
DWI	0561
EAA	0386
EDW	0942 0947 1026 1951 2024 2134
EIN	0926 1023 1094 1242 1394 1443 1983 2001 2191 2206 2217 2250 2256 2272 2294 2364 2374 2399 2409 2411 2432 2486 2542 2583 2635 3129 3174 3318 3345 3501 3755 3781 3857 4572 4634 4678 4715
ELB	1703 3705
ETD	0350 1947 1955 2167 3004 3050 3676 3693 3713 3902 4066 4077 4124 4934 5095 5348 5407 5714 5791 5821 5836 5882 5924 6108 6134 6143 6226 6382 6527 6534 6554
ETJ	0325 0428
EVA	3363 3886 5261 5328 5354 5377 5485 5792 5808 5849 6024 6042 6087 6179 6276 6312 6488 6545 6585 6653
EVE	5642

Printed in FRANCE © AIRBUS S.A.S. 2007. All rights reserved.

OPERATOR	MSN
EVJ	1422
EWG	5497 5525 5557 5601 5635 5658
EZY	2037 2043 2050 2053 2062 2120 2170 2181 2184 2245 2289 2300 2353 2360 2370 2385 2402 2412 2463 2471 2477 2481 2492 2495 2503 2512 2514 2527 2528 2538 2565 2578 2605 2636 2646 2677 2681 2691 2715 2727 2735 2742 2744 2754 2765 2769 2777 2779 2782 2795 2803 2812 2818 2827 2829 2854 2860 2866 2873 2884 2923 2946 2959 3003 3036 3041 3053 3059 3061 3082 3084 3088 3090 3118 3122 3134 3137 3176 3184 3411 3413 3426 3432 3442 3466 3537 3544 3555 3569 3571 3608 3634 3675 3683 3702 3720 3735 3742 3746 3754 3763 3774 3788 3799 3805 3808 3810 3824 3843 3844 3845 3854 3871 3888 3909 3913 3922 3946 3953 3975 3979 3991 4006 4012 4014 4034 4040 4048 4056 4069 4076 4080 4087 4125 4129 4132 4157 4179 4196 4219 4233 4234 4250 4286 4313 4327 4380 4385 4418 4425 4427 4437 4444 4451 4554 4556 4588 4591 4624 4635 4636 4640 4646 4667 4676 4680 4693 4705 4708 4717 4721 4740 4744 4749 4778 4781 4785 4787 4837 5019 5020 5046 5052 5056 5064 5104 5111 5113 5116 5138 5146 5150 5187 5201 5224 5236 5249 5289 5318 5319 5542 5592 5638 5688 5702 5739 5757 5785 5927 5981 6011 6047 6095 6177 6188 6192 6267 6353 6412 6416 6485 6502 6509 6525 6541 6546 6562 6565 6568 6572 6587 6605 6606 6633 6675 6680
F2I	0082 0085 0099 0138 0148 0168 0203 0220 0230 0243 0249 0251 0285 0294 0301 0317 0342 0347 0422 0449 0460 0488 0496 0497 0525 0538 0555 0653 0657 0724 0758 0787 0793 0976 1010 1846 3853 3872
FCB	0928 1843 2032
FFT	1515 1583 1615 1684 1781 1786 1806 1860 1943 1980 1997 2010 2012 2019 2103 2198 2209 2236 2258 2260 2287 2318 2406 2448 2483 2518 2695 2806 2836 2857 3205 3389 3431 4127 4204 4253 4254 4272 4307 4562 4641 4668 4688 4704 4727 4745 5526 5581 5661 6184
FHY	2524 2804 3025 3852 3891 4207 4658 5096
FIA	0295
FIN	0941 0961 1073 1107 1184 1185 1241 1309 1352 1364 1405 1470 1544 1588 1712 1913 1916 1978 1989 2065 2124 2146 2154 2208 2266 5758 5803 5922 5961 6083
FJW	2281
FLI	2186 3905 5079
FRN	0647 0660
FTZ	1145 2176 2268 2308 2891
G4I	1157 1795 2507
G8E	2141
GAF	3897 4060
GAP	3087 3187 3273 3310 3455 3731 4777 4984 5007 5012 5103 5310 6201 6539
GBB	0053 0054 0064 0076 0081
GCA	0415

Printed in FRANCE © AIRBUS S.A.S. 2007. All rights reserved.

OPERATOR	MSN
GCR	2338 2475 4600 4739 4825 5006 5117 5760 5799 5835 5850 5853 5894 5928 5971 6348 6449 6570
GFA	4030 4059 4083 4146 4158 4188 4218 4255 4502 4541 4780 4827 4860 4865 5025 5074 5171 5175 5180 5257 5321 5336
GHT	0438
GLG	1866 1872 1882 1925 2078 2126 3408 4379 4487 4547
GMI	0684 0970 0995 3019 3407 3533 3560 3950 4663 4691 5085 6005
GOW	3306 3597 3616 3798 3827 3900 3915 5016 5112 5232 5463 5552 5675 5809 5811 5990 6072
GSW	3589 3818 5843
GWI	0117 0135 0137 0161 0200 0201 0209 0216 0217 0218 0267 0268 0269 0346 0382 0401 0646 0654 0794 1016 1077 1084 1089 1136 1147 1155 1170 1172 1209 1277 2607 2628 2632 2813 2833 2976 3011 3128 3172 3193 3352 3358 3375 3500 3534 3839 3841 4166 4227 4256 4285 4998 5043 5457 5467 5535 5569 5941 5978
GZQ	1878
HDA	0633 0756 0784 0812 0930 0993 1024 1253 1695 1721 1984 2021 2229 2238 2428 3369 3669 4023 4247 5024 5030 5362 5429
HFY	1004
HIM	6626
HKE	2299 2322 2717 4181 4445 4970 5260 5264 5266 5341 5685 5725 5738 6142 6302
HKJ	2706 3073 4878
HRM	0642
HTU	5209 5240 6156 6268
HVN	2255 2261 2267 2974 3005 3013 3022 3198 3315 3355 3600 3737 3862 3964 3966 4136 4213 4277 4311 4315 4669 4703 4737 4783 4826 4863 4945 4971 5164 5241 5247 5251 5275 5297 5306 5340 5385 5392 5418 5427 5438 5456 5469 5495 5555 5699 5709 5916 5958 5994 6266 6344
HYP	1654 1679 1753
I2L	0491 0668 0760 0816 0954
I2T	1631 1682
IAW	4044 4067 5464
IBE	0158 0173 0207 0224 0266 0356 0938 0998 1021 1027 1154 1362 1572 1655 1674 1681 1716 1793 1809 1836 2115 2220 2225 2242 2264 2270 2311 2365 2391 2472 2488 2563 2736 2756 2843 2889 2897 2996 3078 3209 3320 3380 3443 3651 3744 5486 5570 5692 6244 6328
IBS	1047 1059 1067 1099 1101 1119 1125 1198 1439 1450 1736 2104 2143 2248 2357 2381 2807 5501 5590 5729 5815

Printed in FRANCE © AIRBUS S.A.S. 2007. All rights reserved.

OPERATOR	MSN
IGO	1767 1920 2108 2204 2275 2334 2359 2457 2649 3357 3414 3453 3457 3497 3541 3618 3750 3782 3863 3943 4008 4113 4156 4216 4312 4328 4384 4399 4438 4481 4488 4506 4518 4535 4552 4603 4609 4614 4630 4637 4752 4757 4762 4812 4813 4818 4868 4888 4918 4947 4954 4965 4973 5027 5036 5073 5076 5080 5090 5092 5094 5120 5155 5158 5188 5190 5194 5228 5230 5231 5259 5262 5291 5298 5313 5335 5365 5375 5411 5426 5437 5449 5460 5473 5476 5507 5537 5577 5641 5676 5683 5712 5727 5744 5807 5829 5893 5898 5923 5952 5992 6010 6036 6208 6247 6275 6287 6289 6336
IND	0343
IRA	0303 0312 0345 0575 0857 2054
IRC	0354 0414 0480
IRM	0550
ISR	4354 4413
ISS	0737 0749
IYE	4653 4690
IZG	0376 0395 0400 0407 0430 0476 0999
JAD	2764 3246
JAS	5478
JAV	0029 0537 2061
JBU	1123 1156 1173 1235 1240 1257 1270 1280 1302 1327 1398 1446 1452 1506 1528 1546 1557 1610 1650 1705 1739 1784 1785 1849 1861 1898 1904 1915 1917 1927 1948 2006 2020 2031 2042 2063 2075 2099 2125 2132 2136 2149 2150 2159 2160 2177 2201 2215 2231 2246 2259 2280 2284 2286 2307 2314 2336 2352 2368 2384 2386 2415 2447 2449 2461 2489 2491 2504 2520 2535 2577 2580 2640 2647 2671 2710 2725 2755 2781 2802 2814 2832 2848 2871 2880 2900 2945 2970 2977 2992 3029 3039 3072 3091 3119 3150 3190 3228 3263 3287 3348 3381 3416 3451 3479 3488 3517 3554 3572 3622 3659 3707 3724 3760 3800 3811 4578 4612 4647 4904 5060 5142 5148 5302 5312 5349 5417 5677 5723 5782 5783 5854 5865 5909 5960 6031 6130 6185 6245 6279 6326 6359 6390 6425 6448 6512 6560 6575 6609 6663
JBW	0445
JJP	5093 5145 5161 5245 5274 5281 5355 5492 5499 5520 5598 5618 5649 5695 5701 5717 5732 5796 6296 6381
JSA	2316 2356 2423 2453 2604 4443 4515 4772 4786 4872 4914 5305 5323 5390 5433 5472 5708 5813
JST	1195 1408 2169 2185 2197 2292 2329 2455 2515 2526 2537 2573 2608 2642 2651 2703 2766 2787 3474 3495 3668 3717 3783 3899 3916 3917 3948 4177 4178 4229 4245 4257 4303 4343 4356 4434 4460 4466 4495 4497 4527 4899 4922 5039 5211 5270 5311 5334 5482 5489 5532 5566 5631 5775 5780 5814 5858 5871 6362
JZR	3919 3939 4162 5033 5625 5833 6124
KAC	0181 0182 0195 2046 3957 6350 6375 6458 6476 6500 6516 6538
KAY	3046 4470 5963
KFR	2650
KHO	0311 0409 0426 0644 0937 2091

Printed in FRANCE © AIRBUS S.A.S. 2007. All rights reserved.

OPERATOR	MSN
KHV	2303 2480 5343
KKK	0604 0614 0675 0761 0806 0808 0823 0963 0968 0974 1008 1124 1390 1438 1451 1503 1624 1950 1953 2029 2077 2747 2753 5115 5290
KNE	1942 1965 2123 2171 2182 2199 2569 2776 3218 3238 3256 3361 3396 3425 3475 3530 3787 3802 3809 3817 3868 3889 3894 3933 4055 4061 4699 4735 5716
KPM	0357
KZR	1042 1204 3141 3614 5357 5401 5404 5613 5734 5870 5968 6029 6037
LAA	4405 4450 4490 4526 5373 5405 5494
LAN	1304 1332 1351 1355 1491 1512 1526 1548 1568 1854 1858 1877 1903 2089 2096 2295 2304 2321 2572 2585 2845 2858 2864 2872 2886 2892 2894 3264 3280 3319 3330 3535 3556 3663 3671 3770 3772 3779 4383 4400 4439 4476 4509 4516 4543 4546 4549 4563 4576 4597 4598 4605 4657 4697 4758 4767 4815 4839 4871 4892 4896 4921 4943 4972 5005 5097 5125 5178 5213 5229 5234 5263 5316 5324 5364 5408 5443 5453 5483 5493 5548 5554 5583 5586 5654 5666 5686 5707 5748 5764 5801 5818 5859 5929 5965 6135 6183 6364 6398 6406 6484 6670 6685
LAO	4596 4639 5356 5396
LBT	1121 1175 1597 1744 2158 3480 3487 4623
LFO	0659
LIM	0828
LJB	3985
LKE	2581 2617 2746 3240 5100 5172 5220 6149
LLC	0883 0914 0967 0990 1041 1715 2987 4203 4489
LLM	1054 1918 1956 1967 1969 1993 2413 2419 2439
LLP	0739 1007 1411 1723 2016 2118 2342 2903 2912 3191
LLX	2529 2619
LMJ	1868
LMU	0852 0977 1366 1561
LUR	0229
LWA	2878 2954
LZB	2540 2596 3309 3564 3780
MAC	4539 4568 5143 5206
MAU	1592 1936
MEA	1977 2055 3736 3804 3837 4296 4339 4632 5000 5152 5162 5253 5746
MJF	4353
MJN	3723 4117 4795
MLD	0622 0741 2849
MLM	3932 4622
MLR	1893 1946 2731 3106
MMA	0316 0973 1180 1247 1791

Printed in FRANCE © AIRBUS S.A.S. 2007. All rights reserved.

OPERATOR	MSN
MON	0864 0983 1015 1045 1153 1207 1320 1413 1421 1571 1605 1637 1707 1763 1794 1941 2105 2142 2234 2553 2610 2730 2793 3278 3293 3458 3522 3546 3575 5582 5606 6059 6126 6550
MOV	2442 2446 3364 3403
MRJ	0530 1202 1300 1353
MSC	2937 2966 3282 3323 3626 3840
MSR	0165 0166 0178 0194 0198 0322 0351 0366 0680 0687 0715 0725 2070 2073 2079 2088 2094
MXA	0252 0259 0260 0275 0276 0296 0320 0321 0353
MYX	0888 1896
NIA	2410 2874 3183 3219 3925 4310
NKS	2433 2470 2473 2476 2485 2490 2560 2567 2590 2603 2622 2673 2679 2698 2704 2711 2723 2797 2893 2898 2929 2942 2963 2978 2983 3007 3017 3026 3165 3393 3395 4206 4264 4321 4431 4548 4592 4595 4902 4951 4996 5029 5042 5132 5159 5370 5387 5458 5517 5624 5672 5804 5861 5880 5954 5999 6082 6193 6300 6304 6327 6331 6345 6370 6383 6424 6436 6463 6487 6507 6566 6586 6616 6672
NLY	2668 2749 2867 2902 3093 3415 3447 3504 3661 3689 3728 4316 4368 4581 4594 4606 5522 5648
NMA	1697 1732 1952 2676
NMB	3346 3586 5366 5400
NVD	0211 0528 0558 0709 0902 1005 1626 1778 1998
NVR	2216
NWS	1219 1233 1276 2927 2933 3034 3120
OAW	1886
OBS	3758
OHY	0364 0385 0543 0580 0640 0661 0676 0771 0792 0810 0811 0835 0912 0916 2571 2688
OLY	0517 0535 0666 1612 2396
OMS	3035 3047 3111
ONE	3001 3030 3062 3214 3216 3371 3390 3438 3469 3509 3585 3602 3606 3635 3642 4222 4287 4336 4891 4913 4941 4942 5193 5278 5299 5754 5841 6050 6057 6103 6110 6125 6139 6173 6528 6536 6561 6598 6634 6651 6689
ORF	2566 4992
OTF	1407
OZW	0429 1922
PAL	3553 3579 3652 5081 5140 5315 5371 5715 5747 5787 5820 5825 5838 6074 6253 6291 6295 6330 6363 6371 6493 6531 6573 6623
PGT	3831 4175 5879 5902 5950 5995 6465 6597 6619 6666
PIA	2155 2212 2274 2719 2758 2789 2926 2944 3031 3060 3097
PIC	2331 2340 2517 2670 2922 3012 3621 4459 4533 6136
PKZ	6069
PTI	1263
QAF	0927 1335 3994 4114 4170
QDA	6061 6102 6259 6413 6547 6608 6681

Printed in FRANCE © AIRBUS S.A.S. 2007. All rights reserved.

OPERATOR	MSN
QSM	0607 0611 0617
QTR	1487 1566 1648 1656 1773 1895 1928 1957 2097 2107 2121 2138 2161 2288 2341 3274 4110 4130 4173 4183 4382 4406 4436 4479 4496 4530 4615 4700 4754 4784 4802 4810 4858 4930 4968 5010 5078 5127 5217 5255 5361 5395 6347 6467 6494 6529 6622 6646
R1T	1908 6112
RBA	2135 2139 2195 3071
RBG	3152
RCT	1017 2023
RFJ	0814
RJA	2953 3428 3685 3803 3832 4670 4817 4853 5099 5128 5177
RJD	1618 5277
RNA	6445 6555
ROT	2931 2955 3220 3225
RYW	0569 5367
RZO	2011 2325 2390
SAA	2326 2355 2375 2379 2418 2438 2469 2501 4990 5011 5637 5680 5956 6007 6147 6189 6200 6306 6439 6478
SAI	0542 0877 1497 2027 2496 2502 3105 3270
SAS	1183 1383 1587 1619 1642 1675 1798 1807 1817 1848 2817 2850 2856 2883 2888 2911 2958 2990 3086 3159 3192 3227 3231 3292 3335
SBI	1071 1078 1090 1091 1126 1129 1131 1149 1164 1167 1819 1870 2028 2064 2076 2279 2369 2373 2464 2474 2618 2623 2641 2726 3070 3446 3473 3490 3494 3866 3880 4032 4150 5001 5026 5031 5106 5134 5167 5559 5607 5779 5919 6066 6171
SDM	0649 1130 1200 1379 1488 1560 1630 1743 1761 1805 1808 1841 1851 1863 1876 1890 2093 2151 2163 2179 2241 2465 2497 2751 2879 2913 3065 3179 3794 3942 3998
SEY	1944 1945
SFJ	4555 4720 5102 5393 5512 5652 5773 5862 5931
SFW	0734 0994 1018
SGD	0424
SGQ	6455 6474 6583
SHJ	0910 6659
SHU	2052 2069 2072 2222 2243 3108 3281 3298 3336 3838
SKU	1400 1523 2119 2129 2214 2249 2251 2283 2378 2380 2436 2460 2548 3171 3331
SLK	0969 2252 2568 2775 3104 3570 3821 4118 4215 4259 4457 5050 5089 5296 5531 5794
SND	1880 1999
SNG	4611 4648
SNX	0289
SOL	0302
SSG	2550
SUD	3040

Printed in FRANCE © AIRBUS S.A.S. 2007. All rights reserved.

OPERATOR	MSN
SVA	4015 4057 4081 4090 4092 4104 4115 4122 4135 4273 4314 4337 4349 4357 4364 4376 4391 4392 4393 4394 4397 4408 4414 4419 4432 4442 4454 4467 4484 4501 4517 4519 4542 4564 4577 4590 4811 4823 4838 4925 4955 4962 5009 5065 5223 5285 5314 5447 5509 5549
SVR	0735 0775 0815 0841 0991 1012 1063 1152 1199 1484 1579 1603 1720 1751 1777 1884 1901 1905 2117 2166 2175 2187 2278 2327 2343 2349 2707 2862 2998 3099 3107 3189 3385 3388 3433 3472 3834
SVW	2592 3100 3133 3542 3856
SWM	0421 0986 1293
SWR	0520 0522 0541 0545 0553 0559 0562 0574 0577 0578 0585 0596 0603 0612 0621 0635 0643 0664 0673 0681 0701 0703 0713 0727 0782 0987 1144 1762 4534 4618 4673 5037 5069 5518 5567
SYR	0886 0918 1032 1076 1085 1117
TAE	0934 0946 0949 1339 1368 1500 1934 2084 2659
TAI	1066 1334 1598 1625 2282 2301 2339 2434 2444 2687 2917 3042 3057 3103 3113 3248 3276 3378 3418 3510 3538 3869 4906 4944 5068 5219 5238 5243 5280 5333 5406 5936 6002 6068 6099 6132 6190
TAM	1092 1096 1103 1139 1143 1158 1215 1246 1251 1376 1459 1486 1518 1575 1580 1591 1593 1595 1628 1652 1692 1801 1802 1825 1826 1827 1831 1832 1835 1837 1855 1857 1888 1891 2014 2044 2372 2393 2467 2513 2661 2734 2737 2784 2838 2859 2887 2896 2904 2924 3002 3032 3058 3156 3180 3211 3222 3229 3266 3284 3294 3313 3391 3565 3588 3594 3595 3630 3658 3662 3710 3727 3733 3761 3816 3908 3972 4000 4163 4171 4192 4320 4352 4358 4389 4441 4446 4465 4544 4570 4662 4734 4756 4773 4953 4974 5066 5101 5107 5109 5184 5222 5342 5345 5528 5591 5621 5643 5749 5752 5845 5883 5947 5987 6097 6121 6163 6165 6409 6414 6592 6632 6658
TAP	0629 0750 0755 0763 0790 0821 0837 0870 0906 0917 0933 0945 0960 0979 0982 1034 1100 1106 1120 1127 1165 1181 1206 1231 1307 1399 1667 1668 1713 1718 1756 1765 1799 1816 2178 2792 2822 3769 3883 4021 4095 4106 4145
TAR	0119 0123 0124 0205 0370 0390 0402 0511 0869 0880 0958 0975 1187 1479 1700 3096 4344 4689 5204 5474 5610 6338
TBA	4766 4801 4846 5157 5256 5451 5529 5563 5855 6380 6391 6404 6588
TBJ	1485
TBZ	0361 0362 0405
TCW	1381 1402 1929 1954 1968
TCX	1006 1238 1250 1881 1887 1921 1972 2060 5603 5872 6038 6056 6114 6122 6515 6526 6548
TDR	0795
TGW	2724 2728 3757 3801 4210 4421 4469 4491 4493 4532 4561 4608 4645 4879 4931 5496 5596 5605 5662 5697 5721 5805 5915
THD	5198 5248 5258 5301 5436 5553 5806 5828 5857 5892 5951 5979 6113 6140 6254 6297 6374 6417

Printed in FRANCE © AIRBUS S.A.S. 2007. All rights reserved.

OPERATOR	MSN
THY	1002 2156 2164 2395 2401 2404 2414 2452 2522 2602 2609 2626 2631 2655 2738 2739 2823 2868 2916 2919 2928 2934 2941 2984 2999 3010 3015 3126 3142 3185 3207 3208 3239 3257 3259 3283 3303 3308 3341 3350 3382 3405 3429 3525 3539 3558 3567 3603 3637 3654 3673 3688 3718 3719 3738 3896 3931 3949 4042 4629 4643 4654 4665 4682 4695 4698 4706 4755 4761 4774 4779 4788 4790 5077 5083 5118 5154 5205 5254 5388 5450 5465 5490 5546 5584 5633 5663 5667 5689 6508 6563 6599 6652 6657 6682
TJS	3513 3632 4169
TNA	0731 0746 0791 0822 2376 2914 3577 6693
TTW	4804 4874 6187 6522 6604 6700
UAE	4822
UAL	0435 0439 0442 0450 0452 0454 0456 0457 0462 0463 0464 0465 0470 0472 0475 0479 0483 0485 0487 0489 0500 0503 0504 0506 0508 0510 0512 0523 0539 0568 0571 0587 0589 0592 0613 0638 0655 0678 0683 0686 0690 0702 0748 0751 0759 0780 0783 0788 0798 0804 0820 0824 0825 0826 0834 0836 0842 0843 0847 0850 0851 0858 0862 0865 0867 0871 0873 0882 0893 0898 0944 0948 0952 0955 0965 0980 0989 1001 1022 1031 1104 1105 1128 1146 1163 1192 1211 1243 1248 1266 1272 1282 1290 1291 1321 1341 1343 1359 1363 1401 1409 1420 1426 1427 1432 1435 1460 1469 1474 1475 1477 1495 1507 1508 1514 1522 1533 1538 1545 1555 1559 1569 1573 1581 1584 1585 1586 1600 1609 1617 1620 1627 1647 1649 1653 1664 1669 1671 1680 1688 1702 1728 1731 1737 1741 1755 1821 1840 1842 1845 1847 1865 2667 2815
UEA	2654 2696 2762 2774 2820 2835 3024 3706 4347 4743 4988 5003 5191 5252 5957 6248 6281 6292 6357
UJX	0733 1213 1663
UKN	3260
UNA	2921 4228 4583 4732 5545

Printed in FRANCE © AIRBUS S.A.S. 2007. All rights reserved.

OPERATOR	MSN
USA	0055 0066 0448 0762 0803 0844 0856 0861 0863 0866 0868 0885 0889 0890 0896 0904 0922 0924 0929 0931 0953 0972 0997 1003 1019 1033 1038 1040 1043 1046 1049 1050 1051 1052 1055 1056 1061 1064 1065 1069 1075 1079 1083 1088 1095 1097 1109 1110 1111 1112 1114 1116 1122 1134 1135 1141 1148 1166 1178 1182 1196 1203 1205 1223 1224 1234 1245 1254 1264 1265 1268 1269 1274 1275 1281 1284 1287 1289 1294 1297 1298 1301 1310 1311 1313 1314 1315 1317 1319 1323 1326 1328 1331 1340 1342 1348 1350 1354 1358 1360 1369 1371 1373 1375 1378 1382 1389 1391 1393 1395 1397 1403 1406 1410 1412 1417 1419 1425 1431 1436 1442 1447 1455 1462 1463 1465 1472 1481 1490 1492 1496 1499 1517 1519 1521 1525 1527 1531 1534 1536 1539 1547 1552 1563 1565 1576 1621 1643 1644 1651 1666 1701 1704 1710 1724 1764 1792 1844 1935 2193 2302 2312 2405 2458 2482 2570 2595 2613 2615 2630 2669 2690 3584 3629 3633 3712 3740 3796 3858 3879 3881 3924 3928 3944 3960 3977 3989 3993 4025 4041 4050 4082 4086 4107 4123 4134 4149 4202 4242 4843 4847 4850 4885 4893 4898 4932 4935 4940 4957 4960 4966 5235 5244 5269 5282 5292 5300 5317 5332 5368 5374 5409 5422 5444 5475 5504 5513 5588 5594 5644 5659 5684 5696 5728 5751 5763 5795 5800 5899 5939 5980 6027 6035 6100 6133 6152 6175 6181 6194 6214 6230 6236 6249 6255 6264 6337 6387 6420 6427 6443 6479 6490 6523 6537 6543 6569 6613 6618 6625
UZB	4371 4395 4417 4485 4492 4528 4651 4724 4770 4952
VAR	2383 2718
VAX	3581 5055 6009 6294
VIM	0879 1060
VIP	2421 4151
VIV	2157 2210 2443 2576 2752 2908 3743 6574 6602
VJC	2712 2745 3646 3739 3791 4049 4190 4193 4415 4475 4504 4512 4907 5295 5742 5822 6025 6242 6341 6378 6457 6498 6584 6696
VKG	1932 1960 6314 6342 6351 6389 6438 6468
VLG	1171 1208 1210 1221 1349 1372 1396 1430 1461 1516 1550 1749 1862 1914 1933 1979 2168 2223 2388 2407 2479 2589 2620 2658 2678 2761 2785 2794 2798 2962 2988 3028 3054 3083 3095 3102 3109 3145 3151 3169 3203 3237 3321 3376 3377 3400 3444 3476 3492 3529 3833 3907 3995 4128 4463 4478 4661 4674 4681 4742 4849 4855 4937 5479 5530 5533 5587 5599 5612 5616 5620 5673 5877 5885 5925 5940 6039 6045 6079 6081 6123 6128 6377 6400 6450 6483 6510 6518 6535 6557 6571 6594 6607 6638 6660 6684 6691
VNL	5844 5901 5926 6257 6282 6320 6422 6447
VOE	2113 2122 2240 2253
VOI	2657 2666 2771 2780 2979 2997 3045 3069 3077 3175 3253 3279 3450 3463 3491 3524 3543 3590 3624 3672 4403 4422 4741 4798 4828 4832 4950 5062 5207 5212 5308 5322 5337 5391 5488 5510 5595 5651 5776 5793 5819 5988 5996 6014 6109 6161 6288 6321 6332 6470 6558 6601 6610

Printed in FRANCE © AIRBUS S.A.S. 2007. All rights reserved.

OPERATOR	MSN
VRD	2616 2674 2740 2773 2778 2800 2811 2830 2851 2993 3016 3037 3101 3135 3155 3181 3204 3230 3324 3347 3349 3359 3398 3417 3445 3460 3465 3503 3656 3670 3684 3686 4448 4480 4558 4559 4610 4616 4655 4805 4814 4851 4867 4894 4948 4959 4991 4999 5004 5034 5058 5179 5515 6669
VRE	0067 1429 2066 2213 2228
VTI	6223 6278 6311 6343 6388 6513
VVC	1306 1370 1454 1564 1578 1657 1686 1725 1757 1867
WGT	1212
WHT	0548 1256 2440 2675
WOW	4270 4305 5681 5733 6210 6232
WRC	0645 0781 1869 2462 2682
WZZ	3127 3143 3166 3177 3354 3384 3409 3430 3531 3562 3741 3771 3807 3877 3927 3947 3968 4109 4174 4223 4246 4308 4323 4351 4372 4621 4628 4683 4716 4736 5021 5075 5123 5139 5196 5539 5604 5608 5615 5617 5660 6001 6058 6077 6086 6093 6098 6115 6131 6195 6235 6352 6360 6394 6489 6544 6559 6576 6589 6614 6631 6662 6683

Printed in FRANCE © AIRBUS S.A.S. 2007. All rights reserved.

(4) Configuration by MSN

MSN	CONFIGURATION
0029 0045 0046 0049 0050 0051 0052 0053 0054 0055 0056 0057 0059 0064 0065 0066 0067 0068 0069 0070 0071 0072 0073 0076 0077 0078 0081 0082 0083 0084 0085 0086 0087 0093 0094 0099 0104 0110 0111 0112 0113 0115 0116 0117 0118 0119 0121 0122 0123 0124 0125 0126 0127 0135 0137 0138 0140 0141 0142 0148 0149 0150 0152 0153 0154 0157 0158 0159 0160 0161 0162 0164 0165 0166 0168 0169 0171 0172 0173 0174 0175 0178 0181 0182 0183 0185 0192 0194 0195 0197 0198 0200 0201 0202 0203 0205 0206 0207 0208 0209 0210 0211 0213 0216 0217 0218 0219 0220 0224 0229 0230 0231 0232 0234 0237 0239 0242 0243 0244 0248 0249 0251 0252 0253 0254 0255 0256 0259 0260 0262 0263 0265 0266 0267 0268 0269 0272 0273 0275 0276 0277 0279 0281 0282 0284 0285 0287 0289 0290 0291 0292 0293 0294 0295 0296 0297 0298 0300 0301 0302 0303 0306 0307 0308 0309 0311 0312 0314 0316 0317 0318 0319 0320 0321 0322 0324 0325 0328 0329 0330 0331 0332 0339 0340 0341 0342 0343 0345 0346 0347 0350 0351 0353 0354 0355 0356 0357 0358 0359 0360 0361 0362 0364 0366 0367 0368 0370 0371 0372 0373 0376 0378 0380 0381 0382 0383 0385 0386 0387 0388 0390 0393 0395 0398 0399 0400 0401 0402 0403 0404 0405 0406 0407 0408 0409 0410 0412 0414 0415 0416 0417 0418 0420 0421 0422 0423 0424 0426 0427 0428 0429 0430 0431 0432 0434 0435 0436 0438 0439 0441 0442 0444 0445 0447 0448 0449 0450 0452 0454 0456 0457 0458 0460 0462 0463 0464 0465 0466 0468 0470 0472 0473 0474 0475 0476 0477 0479 0480 0482 0483 0484 0485 0486 0487 0488 0489 0490 0491 0493 0495 0496 0497 0498 0499 0500 0501 0502 0503 0504 0505 0506 0507 0508 0509 0510 0511 0512 0513 0514 0516 0517 0518 0519 0520 0521 0522 0523 0524 0525 0526 0527 0528 0529 0530 0531 0532 0533 0534 0535 0537 0538 0539 0540 0541 0542 0543 0544 0545 0546 0548 0549 0550 0551 0552 0553 0554 0555 0556 0558 0559 0560 0561 0562 0563 0564 0565 0566 0567 0568 0569 0570 0571 0572 0573 0574 0575 0576 0577 0578 0579 0580 0581 0582 0583 0584 0585 0586 0587 0589 0591 0592 0593 0595 0596 0597 0598 0599 0600 0603 0604 0607 0608 0609 0610 0611 0612 0613 0614 0616 0617 0618 0619 0620 0621 0622 0623 0625 0627 0629 0630 0631 0633 0634 0635 0636 0637 0638 0639 0640 0641 0642 0643 0644 0645 0646 0647 0648 0649 0650 0651 0652 0653 0654 0655 0656 0657 0658 0659 0660 0661 0662 0664 0665 0666 0667 0668 0669 0670 0671 0672 0673 0675 0676 0677 0678 0679 0680 0681 0682 0683 0684 0685 0686 0687 0688 0689 0690 0691 0692 0693 0694 0695 0696 0697 0698 0699 0700 0701 0702 0703 0704 0705 0706 0709 0711 0712 0713 0714 0715 0716 0717 0718 0719 0720 0721 0722 0723 0724 0725 0726 0727 0728 0729 0730 0731 0732 0733 0734 0735 0736 0737 0738 0739 0740 0741 0742 0743 0744 0745 0746 0747 0748 0749 0750 0751 0752 0754 0755 0756	001

Printed in FRANCE © AIRBUS S.A.S. 2007. All rights reserved.

MSN	CONFIGURATION
0757 0758 0759 0760 0761 0762 0763 0764 0765 0766 0767 0768 0769 0770 0771 0773 0774 0775 0776 0777 0778 0779 0780 0781 0782 0783 0784 0785 0786 0787 0788 0790 0791 0792 0793 0794 0795 0796 0797 0798 0800 0801 0802 0803 0804 0805 0806 0807 0808 0809 0810 0811 0812 0813 0814 0815 0816 0817 0818 0819 0820 0821 0822 0823 0824 0825 0826 0827 0828 0829 0830 0831 0832 0833 0834 0835 0836 0837 0838 0839 0840 0841 0842 0843 0844 0845 0846 0847 0848 0849 0850 0851 0852 0853 0854 0855 0856 0857 0858 0859 0860 0861 0862 0863 0864 0865 0866 0867 0868 0869 0870 0871 0872 0873 0874 0875 0876 0877 0878 0879 0880 0881 0882 0883 0884 0885 0886 0887 0888 0889 0890 0891 0892 0893 0894 0895 0896 0897 0898 0900 0901 0902 0903 0904 0905 0906 0907 0908 0909 0910 0911 0912 0913 0914 0915 0916 0917 0918 0919 0920 0921 0922 0923 0924 0925 0926 0927 0928 0929 0930 0931 0932 0933 0934 0935 0936 0937 0938 0939 0940 0941 0942 0943 0944 0945 0946 0947 0948 0949 0950 0951 0952 0953 0954 0955 0957 0958 0959 0960 0961 0962 0963 0964 0965 0966 0967 0968 0969 0970 0971 0972 0973 0974 0975 0976 0977 0979 0980 0981 0982 0983 0984 0985 0986 0987 0988 0989 0990 0991 0992 0993 0994 0995 0996 0997 0998 0999 1000 1001 1002 1003 1004 1005 1006 1007 1008 1009 1010 1011 1012 1013 1014 1015 1016 1017 1018 1019 1020 1021 1022 1023 1024 1025 1026 1027 1028 1029 1030 1031 1032 1033 1034 1035 1036 1037 1038 1039 1040 1041 1042 1043 1045 1046 1047 1048 1049 1050 1051 1052 1053 1054 1055 1056 1057 1058 1059 1060 1061 1062 1063 1064 1065 1066 1067 1069 1070 1071 1072 1073 1075 1076 1077 1078 1079 1080 1081 1082 1083 1084 1085 1086 1087 1088 1089 1090 1091 1092 1093 1094 1095 1096 1097 1099 1100 1101 1102 1103 1104 1105 1106 1107 1108 1109 1110 1111 1112 1114 1115 1116 1117 1118 1119 1120 1121 1122 1123 1124 1125 1126 1127 1128 1129 1130 1131 1132 1133 1134 1135 1136 1137 1138 1139 1140 1141 1142 1143 1144 1145 1146 1147 1148 1149 1150 1151 1152 1153 1154 1155 1156 1157 1158 1159 1160 1161 1162 1163 1164 1165 1166 1167 1168 1169 1170 1171 1172 1173 1174 1175 1176 1177 1178 1179 1180 1181 1182 1183 1184 1185 1187 1188 1189 1190 1191 1192 1193 1194 1195 1196 1197 1198 1199 1200 1201 1202 1203 1204 1205 1206 1207 1208 1209 1210 1211 1212 1213 1214 1215 1216 1217 1219 1220 1221 1222 1223 1224 1225 1226 1227 1228 1229 1230 1231 1232 1233 1234 1235 1236 1237 1238 1239 1240 1241 1242 1243 1244 1245 1246 1247 1248 1249 1250 1251 1252 1253 1254 1255 1256 1257 1258 1259 1260 1261 1262 1263 1264 1265 1266 1267 1268 1269 1270 1271 1272 1273 1274 1275 1276 1277 1279 1280 1281 1282 1283 1284 1285 1286 1287 1288 1289 1290 1291 1292 1293 1294 1295 1296 1297 1298 1299 1300 1301 1302 1303 1304 1306 1307 1308 1309 1310 1311 1312 1313 1314 1315 1316 1317 1318 1319 1320 1321 1322 1323 1324 1325 1326 1327 1328 1329 1330 1331 1332	001

Printed in FRANCE © AIRBUS S.A.S. 2007. All rights reserved.

MSN	CONFIGURATION
1334 1335 1336 1337 1338 1339 1340 1341 1342 1343 1344 1345 1346 1347 1348 1349 1350 1351 1352 1353 1354 1355 1356 1357 1358 1359 1360 1361 1362 1363 1364 1365 1366 1367 1368 1369 1370 1371 1372 1373 1375 1376 1377 1378 1379 1380 1381 1382 1383 1384 1385 1386 1387 1388 1389 1390 1391 1392 1393 1394 1395 1396 1397 1398 1399 1400 1401 1402 1403 1404 1405 1406 1407 1408 1409 1410 1411 1412 1413 1414 1415 1416 1417 1418 1419 1420 1421 1422 1423 1424 1425 1426 1427 1428 1429 1430 1431 1432 1433 1434 1435 1436 1437 1438 1439 1440 1441 1442 1443 1444 1445 1446 1447 1448 1449 1450 1451 1452 1453 1454 1455 1456 1457 1458 1459 1460 1461 1462 1463 1465 1466 1467 1468 1469 1470 1471 1472 1473 1474 1475 1476 1477 1478 1479 1480 1481 1482 1483 1484 1485 1486 1487 1488 1489 1490 1491 1492 1493 1494 1495 1496 1497 1498 1499 1500 1501 1502 1503 1504 1505 1506 1507 1508 1509 1510 1511 1512 1513 1514 1515 1516 1517 1518 1519 1520 1521 1522 1523 1524 1525 1526 1527 1528 1529 1530 1531 1532 1533 1534 1535 1536 1537 1538 1539 1540 1541 1542 1543 1544 1545 1546 1547 1548 1549 1550 1551 1552 1553 1554 1555 1556 1557 1558 1559 1560 1561 1562 1563 1564 1565 1566 1567 1568 1569 1570 1571 1572 1573 1574 1575 1576 1577 1578 1579 1580 1581 1582 1583 1584 1585 1586 1587 1588 1589 1590 1591 1592 1593 1594 1595 1596 1597 1598 1599 1600 1601 1602 1603 1604 1605 1606 1607 1609 1610 1611 1612 1613 1614 1615 1616 1617 1618 1619 1620 1621 1622 1623 1624 1625 1626 1627 1628 1629 1630 1631 1632 1633 1634 1635 1636 1637 1638 1639 1640 1641 1642 1643 1644 1645 1646 1647 1648 1649 1650 1651 1652 1653 1654 1655 1656 1657 1658 1659 1661 1662 1663 1664 1665 1666 1667 1668 1669 1670 1671 1672 1673 1674 1675 1677 1678 1679 1680 1681 1682 1683 1684 1685 1686 1687 1688 1689 1690 1691 1692 1693 1694 1695 1696 1697 1699 1700 1701 1702 1703 1704 1705 1706 1707 1708 1709 1710 1711 1712 1713 1714 1715 1716 1717 1718 1719 1720 1721 1722 1723 1724 1725 1726 1728 1730 1731 1732 1733 1734 1735 1736 1737 1738 1739 1740 1741 1742 1743 1744 1745 1746 1747 1748 1749 1750 1751 1752 1753 1754 1755 1756 1757 1758 1759 1760 1761 1762 1763 1764 1765 1766 1767 1769 1770 1771 1772 1773 1774 1775 1776 1777 1778 1779 1780 1781 1782 1783 1784 1785 1786 1787 1788 1789 1790 1791 1792 1793 1794 1795 1796 1797 1798 1799 1800 1801 1802 1803 1804 1805 1806 1807 1808 1809 1810 1811 1812 1814 1815 1816 1817 1818 1819 1820 1821 1823 1824 1825 1826 1827 1828 1829 1831 1832 1833 1834 1835 1836 1837 1838 1839 1840 1841 1842 1843 1844 1845 1846 1847 1848 1849 1850 1851 1852 1853 1854 1855 1856 1857 1858 1859 1860 1861 1862 1863 1864 1865 1866 1867 1868 1869 1870 1871 1872 1873 1874 1875 1876 1877 1878 1879 1880 1881 1882 1883 1884 1885 1886 1887 1888 1889 1890 1891 1892 1893 1894 1895 1896 1897 1898 1899 1900 1901 1902 1903 1904 1905 1906	001

Printed in FRANCE © AIRBUS S.A.S. 2007. All rights reserved.

MSN	CONFIGURATION
1907 1908 1909 1910 1911 1912 1913 1914 1915 1916 1917 1918 1920 1921 1922 1923 1924 1925 1926 1927 1928 1929 1931 1932 1933 1934 1935 1936 1937 1938 1940 1941 1942 1943 1944 1945 1946 1947 1948 1949 1950 1951 1952 1953 1954 1955 1956 1957 1958 1959 1960 1961 1962 1963 1964 1965 1966 1967 1968 1969 1970 1971 1972 1973 1974 1975 1976 1977 1978 1979 1980 1981 1982 1983 1984 1986 1987 1988 1989 1990 1993 1994 1995 1996 1997 1998 1999 2000 2001 2002 2003 2004 2005 2006 2007 2008 2009 2010 2011 2012 2013 2014 2015 2016 2018 2019 2020 2021 2022 2023 2024 2026 2027 2028 2029 2030 2031 2032 2033 2034 2035 2036 2037 2038 2039 2040 2041 2042 2043 2044 2045 2046 2047 2048 2049 2050 2052 2053 2054 2055 2056 2057 2059 2060 2061 2062 2063 2064 2065 2066 2067 2068 2069 2070 2071 2072 2073 2074 2075 2076 2077 2078 2079 2080 2081 2082 2083 2084 2085 2086 2087 2088 2089 2090 2091 2092 2093 2094 2095 2096 2097 2098 2099 2100 2101 2102 2103 2104 2105 2106 2107 2108 2109 2110 2112 2113 2114 2115 2116 2117 2118 2119 2120 2121 2122 2123 2124 2125 2126 2127 2129 2130 2131 2132 2133 2134 2135 2136 2137 2138 2139 2140 2141 2142 2143 2144 2145 2146 2147 2148 2149 2150 2151 2152 2153 2154 2155 2156 2157 2158 2159 2160 2161 2162 2163 2164 2165 2166 2167 2168 2169 2170 2171 2172 2173 2174 2175 2176 2177 2178 2179 2180 2181 2182 2183 2184 2185 2186 2187 2188 2189 2190 2191 2192 2193 2194 2195 2196 2197 2198 2199 2200 2201 2202 2203 2204 2205 2206 2207 2208 2209 2210 2211 2212 2213 2214 2215 2216 2217 2219 2220 2221 2222 2223 2224 2225 2226 2227 2228 2229 2230 2231 2232 2233 2234 2235 2236 2237 2238 2239 2240 2241 2242 2243 2244 2245 2246 2247 2248 2249 2250 2251 2252 2253 2254 2255 2256 2257 2258 2259 2260 2261 2262 2263 2264 2265 2266 2267 2268 2269 2270 2271 2272 2273 2274 2275 2277 2278 2279 2280 2281 2282 2283 2284 2285 2286 2287 2288 2289 2290 2291 2292 2293 2294 2295 2296 2297 2298 2299 2300 2301 2302 2303 2304 2305 2306 2307 2308 2309 2310 2311 2312 2313 2314 2315 2316 2317 2318 2319 2320 2321 2322 2323 2324 2325 2326 2327 2328 2329 2330 2331 2332 2333 2334 2335 2336 2337 2338 2339 2340 2341 2342 2343 2344 2345 2346 2347 2348 2349 2350 2351 2352 2353 2354 2355 2356 2357 2358 2359 2360 2361 2362 2363 2364 2365 2366 2367 2368 2369 2370 2371 2372 2373 2374 2375 2376 2377 2378 2379 2380 2381 2382 2383 2384 2385 2386 2387 2388 2389 2390 2391 2392 2393 2394 2395 2396 2397 2398 2399 2400 2401 2402 2403 2404 2405 2406 2407 2408 2409 2410 2411 2412 2413 2414 2415 2416 2417 2418 2419 2420 2421 2422 2423 2425 2426 2427 2428 2429 2430 2431 2432 2433 2434 2435 2436 2437 2438 2439 2440 2441 2442 2443 2444 2445 2446 2447 2448 2449 2450 2451 2452 2453 2454 2455 2456 2457 2458 2459 2460 2461 2462 2463 2464 2465 2466 2467 2468 2469 2470 2471 2472 2473 2474 2475 2476 2477 2478 2479 2480 2481 2482	001

Printed in FRANCE © AIRBUS S.A.S. 2007. All rights reserved.

MSN	CONFIGURATION
2483 2484 2485 2486 2487 2488 2489 2490 2491 2492 2493 2494 2495 2496 2497 2498 2499 2501 2502 2503 2504 2505 2506 2507 2508 2509 2510 2511 2512 2513 2514 2515 2516 2517 2518 2519 2520 2521 2522 2523 2524 2525 2526 2527 2528 2529 2530 2531 2532 2533 2534 2535 2536 2537 2538 2539 2540 2541 2542 2543 2544 2545 2546 2547 2548 2549 2550 2551 2552 2553 2554 2555 2556 2557 2558 2559 2560 2561 2562 2563 2564 2565 2566 2567 2568 2569 2570 2571 2572 2573 2574 2575 2576 2577 2578 2579 2580 2581 2582 2583 2584 2585 2586 2587 2588 2589 2590 2591 2592 2593 2594 2595 2596 2597 2598 2599 2600 2601 2602 2603 2604 2605 2606 2607 2608 2609 2610 2611 2612 2613 2614 2615 2616 2617 2618 2619 2620 2621 2622 2623 2624 2625 2626 2627 2628 2629 2630 2631 2632 2633 2634 2635 2636 2637 2638 2639 2640 2641 2642 2643 2644 2645 2646 2647 2648 2649 2650 2651 2652 2653 2654 2655 2656 2657 2658 2659 2660 2661 2662 2663 2664 2665 2666 2667 2668 2669 2670 2671 2672 2673 2674 2675 2676 2677 2678 2679 2680 2681 2682 2683 2684 2685 2686 2687 2688 2689 2690 2691 2692 2693 2694 2695 2696 2697 2698 2699 2700 2701 2702 2703 2704 2705 2706 2707 2708 2709 2710 2711 2712 2713 2714 2715 2716 2717 2718 2719 2720 2721 2723 2724 2725 2726 2727 2728 2729 2730 2731 2732 2733 2734 2735 2736 2737 2738 2739 2740 2741 2742 2743 2744 2745 2746 2747 2748 2749 2750 2751 2752 2753 2754 2755 2756 2757 2758 2759 2760 2761 2762 2763 2764 2765 2766 2767 2768 2769 2770 2771 2772 2773 2774 2775 2776 2777 2778 2779 2780 2781 2782 2783 2784 2785 2786 2787 2788 2789 2790 2791 2792 2793 2794 2795 2796 2797 2798 2799 2800 2801 2802 2803 2804 2805 2806 2807 2808 2809 2810 2811 2812 2813 2814 2815 2816 2817 2818 2819 2820 2821 2822 2823 2824 2825 2826 2827 2828 2829 2830 2831 2832 2833 2834 2835 2836 2837 2838 2839 2840 2841 2842 2843 2844 2845 2846 2847 2848 2849 2850 2851 2852 2853 2854 2855 2856 2857 2858 2859 2860 2861 2862 2863 2864 2865 2866 2867 2868 2869 2870 2871 2872 2873 2874 2875 2876 2877 2878 2879 2880 2881 2882 2883 2884 2885 2886 2887 2888 2889 2890 2891 2892 2893 2894 2895 2896 2897 2898 2899 2900 2901 2902 2903 2904 2905 2906 2907 2908 2909 2910 2911 2912 2913 2914 2915 2916 2917 2918 2919 2920 2921 2922 2923 2924 2925 2926 2927 2928 2929 2930 2931 2932 2933 2934 2935 2936 2937 2938 2939 2940 2941 2942 2943 2944 2945 2946 2947 2948 2949 2950 2951 2952 2953 2954 2955 2956 2957 2958 2959 2960 2961 2962 2963 2964 2965 2966 2967 2968 2969 2970 2971 2972 2973 2974 2975 2976 2977 2978 2979 2980 2981 2982 2983 2984 2985 2986 2987 2988 2989 2990 2991 2992 2993 2994 2995 2996 2997 2998 2999 3000 3001 3002 3003 3004 3005 3006 3007 3008 3009 3010 3011 3012 3013 3014 3015 3016 3017 3018 3019 3020 3021 3022 3023 3024 3025 3026 3027 3028 3029 3030 3031 3032 3033 3034 3035 3036 3037 3039 3040 3041 3042 3043 3044 3045 3046	001

Printed in FRANCE © AIRBUS S.A.S. 2007. All rights reserved.

MSN	CONFIGURATION
3047 3048 3049 3050 3051 3052 3053 3054 3055 3056 3057 3058 3059 3060 3061 3062 3063 3064 3065 3066 3067 3068 3069 3070 3071 3072 3073 3074 3075 3076 3077 3078 3079 3080 3081 3082 3083 3084 3085 3086 3087 3088 3089 3090 3091 3093 3094 3095 3096 3097 3098 3099 3100 3101 3102 3103 3104 3105 3106 3107 3108 3109 3111 3112 3113 3114 3115 3116 3117 3118 3119 3120 3121 3122 3123 3124 3125 3126 3127 3128 3129 3130 3131 3132 3133 3134 3135 3136 3137 3138 3139 3140 3141 3142 3143 3144 3145 3146 3147 3148 3149 3150 3151 3152 3153 3154 3155 3156 3157 3158 3159 3160 3161 3162 3164 3165 3166 3167 3168 3169 3170 3171 3172 3173 3174 3175 3176 3177 3178 3179 3180 3181 3182 3183 3184 3185 3186 3187 3188 3189 3190 3191 3192 3193 3194 3195 3196 3197 3198 3199 3200 3201 3202 3203 3204 3205 3206 3207 3208 3209 3210 3211 3212 3213 3214 3215 3216 3217 3218 3219 3220 3221 3222 3223 3224 3225 3226 3227 3228 3229 3230 3231 3232 3233 3234 3235 3236 3237 3238 3239 3240 3241 3242 3243 3245 3246 3247 3248 3249 3250 3251 3252 3253 3254 3255 3256 3257 3258 3259 3260 3261 3262 3263 3264 3265 3266 3267 3268 3269 3270 3271 3272 3273 3274 3275 3276 3277 3278 3279 3280 3281 3282 3283 3284 3285 3286 3287 3288 3289 3290 3291 3292 3293 3294 3295 3296 3297 3298 3299 3300 3301 3302 3303 3304 3305 3306 3307 3308 3309 3310 3311 3312 3313 3314 3315 3316 3317 3318 3319 3320 3321 3322 3323 3324 3325 3326 3327 3328 3329 3330 3331 3332 3333 3334 3335 3336 3337 3338 3339 3340 3341 3342 3343 3344 3345 3346 3347 3348 3349 3350 3351 3352 3353 3354 3355 3356 3357 3358 3359 3360 3361 3362 3363 3364 3365 3366 3367 3368 3369 3370 3371 3372 3373 3374 3375 3376 3377 3378 3379 3380 3381 3382 3383 3384 3385 3386 3387 3388 3389 3390 3391 3392 3393 3394 3395 3396 3397 3398 3399 3400 3401 3402 3403 3404 3405 3406 3407 3408 3409 3410 3411 3412 3413 3414 3415 3416 3417 3418 3419 3420 3421 3422 3423 3424 3425 3426 3427 3428 3429 3430 3431 3432 3433 3434 3435 3436 3437 3438 3439 3440 3441 3442 3443 3444 3445 3446 3447 3448 3449 3450 3451 3452 3453 3454 3455 3456 3457 3458 3459 3460 3461 3462 3463 3464 3465 3466 3467 3468 3469 3470 3471 3472 3473 3474 3475 3476 3477 3478 3479 3480 3481 3482 3483 3484 3485 3486 3487 3488 3489 3490 3491 3492 3493 3494 3495 3496 3497 3498 3499 3500 3501 3502 3503 3504 3505 3506 3507 3508 3509 3510 3511 3512 3513 3514 3515 3516 3517 3518 3519 3520 3521 3522 3523 3524 3525 3526 3527 3528 3529 3530 3531 3532 3533 3534 3535 3536 3537 3538 3539 3540 3541 3542 3543 3544 3545 3546 3547 3548 3549 3550 3551 3552 3553 3554 3555 3556 3557 3558 3559 3560 3561 3562 3563 3564 3565 3566 3567 3568 3569 3570 3571 3572 3573 3574 3575 3576 3577 3578 3579 3580 3581 3582 3583 3584 3585 3586 3587 3588 3589 3590 3591 3592 3593 3594 3595 3596 3597 3598 3599 3600 3601 3602 3603 3604 3605 3606 3607 3608 3609 3610 3611	001

Printed in FRANCE © AIRBUS S.A.S. 2007. All rights reserved.

MSN	CONFIGURATION
3612 3613 3614 3615 3616 3617 3618 3619 3620 3621 3622 3623 3624 3625 3626 3627 3628 3629 3630 3631 3632 3633 3634 3635 3636 3637 3638 3639 3640 3641 3642 3643 3644 3645 3646 3647 3649 3650 3651 3652 3653 3654 3655 3656 3657 3658 3659 3660 3661 3662 3663 3664 3665 3666 3667 3668 3669 3670 3671 3672 3673 3674 3675 3676 3677 3678 3679 3680 3681 3682 3683 3684 3685 3686 3687 3688 3689 3690 3691 3692 3693 3694 3695 3696 3697 3698 3699 3700 3701 3702 3703 3704 3705 3706 3707 3708 3709 3710 3711 3712 3713 3714 3715 3716 3717 3718 3719 3720 3721 3722 3723 3724 3725 3726 3727 3728 3729 3730 3731 3732 3733 3734 3735 3736 3737 3738 3739 3740 3741 3742 3743 3744 3745 3746 3747 3748 3749 3750 3751 3752 3753 3754 3755 3756 3757 3758 3759 3760 3761 3762 3763 3764 3765 3766 3767 3768 3769 3770 3771 3772 3773 3774 3775 3776 3777 3778 3779 3780 3781 3782 3783 3784 3785 3786 3787 3788 3789 3790 3791 3792 3793 3794 3795 3796 3797 3798 3799 3800 3801 3802 3803 3804 3805 3806 3807 3808 3809 3810 3811 3812 3813 3814 3815 3816 3817 3818 3819 3820 3821 3822 3823 3824 3825 3826 3827 3828 3829 3830 3831 3832 3833 3834 3835 3836 3837 3838 3839 3840 3841 3842 3843 3844 3845 3846 3847 3848 3849 3850 3851 3852 3853 3854 3855 3856 3857 3858 3859 3860 3861 3862 3863 3864 3865 3866 3867 3868 3869 3870 3871 3872 3873 3874 3875 3876 3877 3878 3879 3880 3881 3882 3883 3884 3885 3886 3887 3888 3889 3890 3891 3892 3893 3894 3895 3896 3897 3898 3899 3900 3901 3902 3903 3904 3905 3906 3907 3908 3909 3910 3911 3912 3913 3914 3915 3916 3917 3918 3919 3920 3921 3922 3923 3924 3925 3926 3927 3928 3929 3930 3931 3932 3933 3934 3935 3936 3937 3938 3939 3940 3941 3942 3943 3944 3945 3946 3947 3948 3949 3950 3951 3952 3953 3954 3955 3956 3957 3958 3959 3960 3961 3962 3963 3964 3965 3966 3967 3968 3969 3970 3971 3972 3973 3974 3975 3976 3977 3978 3979 3980 3981 3982 3983 3984 3985 3986 3987 3988 3989 3990 3991 3992 3993 3994 3995 3996 3997 3998 3999 4000 4001 4002 4003 4004 4005 4006 4007 4008 4009 4010 4011 4012 4013 4014 4015 4016 4017 4018 4019 4020 4021 4022 4023 4024 4025 4026 4027 4028 4029 4030 4031 4032 4033 4034 4035 4036 4037 4038 4039 4040 4041 4042 4043 4044 4045 4046 4047 4048 4049 4050 4051 4052 4053 4054 4055 4056 4057 4058 4059 4060 4061 4062 4063 4064 4065 4066 4067 4068 4069 4070 4071 4072 4073 4074 4075 4076 4077 4078 4079 4080 4081 4082 4083 4084 4085 4086 4087 4088 4089 4090 4091 4092 4093 4094 4095 4096 4097 4098 4099 4100 4101 4102 4103 4104 4105 4106 4107 4108 4109 4110 4111 4112 4113 4114 4115 4116 4117 4118 4119 4120 4121 4122 4123 4124 4125 4126 4127 4128 4129 4130 4131 4132 4133 4134 4135 4136 4137 4138 4139 4140 4141 4142 4143 4144 4145 4146 4147 4148 4149 4150 4151 4152 4153 4154 4155 4156 4157 4158 4159 4160 4161 4162 4163 4164 4165 4166 4167 4168 4169 4170 4171 4172 4173	001

Printed in FRANCE © AIRBUS S.A.S. 2007. All rights reserved.

MSN	CONFIGURATION
4174 4175 4176 4177 4178 4179 4180 4181 4182 4183 4184 4185 4186 4187 4188 4189 4190 4191 4192 4193 4194 4195 4196 4197 4198 4199 4200 4201 4202 4203 4204 4205 4206 4207 4208 4209 4210 4211 4212 4213 4214 4215 4216 4217 4218 4219 4220 4221 4222 4223 4224 4225 4226 4227 4228 4229 4230 4231 4232 4233 4234 4235 4236 4237 4238 4239 4240 4241 4242 4243 4244 4245 4246 4247 4248 4249 4250 4251 4252 4253 4254 4255 4256 4257 4258 4259 4260 4261 4262 4263 4264 4265 4266 4267 4268 4269 4270 4271 4272 4273 4274 4275 4276 4277 4278 4279 4280 4281 4282 4283 4284 4285 4286 4287 4288 4289 4290 4291 4292 4293 4294 4295 4296 4297 4298 4299 4300 4301 4302 4303 4304 4305 4306 4307 4308 4309 4310 4311 4312 4313 4314 4315 4316 4317 4318 4319 4320 4321 4322 4323 4324 4325 4326 4327 4328 4329 4331 4332 4333 4334 4335 4336 4337 4338 4339 4340 4341 4342 4343 4344 4345 4346 4347 4348 4349 4350 4351 4352 4353 4354 4355 4356 4357 4358 4359 4360 4361 4362 4363 4364 4365 4366 4367 4368 4369 4370 4371 4372 4373 4374 4375 4376 4377 4378 4379 4380 4381 4382 4383 4384 4385 4386 4387 4388 4389 4390 4391 4392 4393 4394 4395 4396 4397 4398 4399 4400 4401 4402 4403 4404 4405 4406 4407 4408 4409 4410 4411 4412 4413 4414 4415 4416 4417 4418 4419 4420 4421 4422 4423 4424 4425 4426 4427 4428 4429 4430 4431 4432 4433 4434 4435 4436 4437 4438 4439 4440 4441 4442 4443 4444 4445 4446 4447 4448 4449 4450 4451 4452 4453 4454 4455 4456 4457 4458 4459 4460 4461 4462 4463 4464 4465 4466 4467 4468 4469 4470 4471 4472 4473 4474 4475 4476 4477 4478 4479 4480 4481 4482 4483 4484 4485 4486 4487 4488 4489 4490 4491 4492 4493 4494 4495 4496 4497 4498 4499 4500 4501 4502 4503 4504 4505 4506 4507 4508 4509 4510 4511 4512 4513 4514 4515 4516 4517 4518 4519 4520 4521 4522 4523 4524 4525 4526 4527 4528 4529 4530 4531 4532 4533 4534 4535 4536 4537 4538 4539 4540 4541 4542 4543 4544 4545 4546 4547 4548 4549 4550 4551 4552 4553 4554 4555 4556 4557 4558 4559 4560 4561 4562 4563 4564 4565 4566 4567 4568 4569 4570 4571 4572 4573 4574 4575 4576 4577 4578 4579 4580 4581 4582 4583 4584 4585 4586 4587 4588 4589 4590 4591 4592 4593 4594 4595 4596 4597 4598 4599 4600 4601 4602 4603 4604 4605 4606 4607 4608 4609 4610 4611 4612 4613 4614 4615 4616 4617 4618 4619 4620 4621 4622 4623 4624 4625 4626 4627 4628 4629 4630 4631 4632 4633 4634 4635 4636 4637 4638 4639 4640 4641 4642 4643 4644 4645 4646 4647 4648 4649 4650 4651 4652 4653 4654 4655 4656 4657 4658 4659 4660 4661 4662 4663 4664 4665 4666 4667 4668 4669 4670 4671 4672 4673 4674 4675 4676 4677 4678 4679 4680 4681 4682 4683 4684 4685 4686 4687 4688 4689 4690 4691 4692 4693 4694 4695 4696 4697 4698 4699 4700 4701 4702 4703 4704 4705 4706 4707 4708 4709 4710 4711 4712 4713 4714 4715 4716 4717 4718 4719 4720 4721 4722 4723 4724 4725 4726 4727 4728 4729 4730 4731 4732 4733 4734 4735	001

Printed in FRANCE © AIRBUS S.A.S. 2007. All rights reserved.

MSN	CONFIGURATION
4736 4737 4738 4739 4740 4741 4742 4743 4744 4745 4746 4747 4748 4749 4750 4751 4752 4753 4754 4755 4756 4757 4758 4759 4760 4761 4762 4763 4764 4765 4766 4767 4768 4769 4770 4771 4772 4773 4774 4775 4776 4777 4778 4779 4780 4781 4782 4783 4784 4785 4786 4787 4788 4789 4790 4791 4792 4793 4794 4795 4796 4797 4798 4799 4800 4801 4802 4803 4804 4805 4806 4807 4808 4809 4810 4811 4812 4813 4814 4815 4816 4817 4818 4819 4820 4821 4822 4823 4824 4825 4826 4827 4828 4829 4830 4831 4832 4833 4834 4835 4836 4837 4838 4839 4840 4841 4842 4843 4844 4845 4846 4847 4848 4849 4850 4851 4852 4853 4854 4855 4856 4857 4858 4859 4860 4861 4862 4863 4864 4865 4866 4867 4868 4869 4870 4871 4872 4873 4874 4875 4876 4877 4878 4879 4880 4881 4882 4883 4884 4885 4886 4887 4888 4889 4890 4891 4892 4893 4894 4895 4896 4897 4898 4899 4900 4901 4902 4903 4904 4905 4906 4907 4908 4909 4910 4911 4912 4913 4914 4915 4916 4917 4918 4919 4920 4921 4922 4923 4924 4925 4926 4927 4928 4929 4930 4931 4932 4933 4934 4935 4936 4937 4938 4939 4940 4941 4942 4943 4944 4945 4946 4947 4948 4949 4950 4951 4952 4953 4954 4955 4956 4957 4958 4959 4960 4961 4962 4963 4964 4965 4966 4967 4968 4969 4970 4971 4972 4973 4974 4975 4976 4977 4978 4979 4980 4981 4982 4983 4984 4985 4986 4987 4988 4989 4990 4991 4992 4993 4994 4995 4996 4997 4998 4999 5000 5001 5002 5003 5004 5005 5006 5007 5008 5009 5010 5011 5012 5013 5014 5015 5016 5017 5018 5019 5020 5021 5022 5023 5024 5025 5026 5027 5028 5029 5030 5031 5032 5033 5034 5035 5036 5037 5038 5039 5040 5041 5042 5043 5044 5045 5046 5047 5048 5049 5050 5051 5052 5053 5054 5055 5056 5057 5058 5059 5060 5061 5062 5063 5064 5065 5066 5067 5068 5069 5070 5071 5072 5073 5074 5075 5076 5077 5078 5079 5080 5081 5082 5083 5084 5085 5086 5087 5088 5089 5090 5091 5092 5093 5094 5095 5096 5097 5098 5099 5100 5101 5102 5103 5104 5105 5106 5107 5108 5109 5110 5111 5112 5113 5114 5115 5116 5117 5118 5119 5120 5121 5122 5123 5124 5125 5126 5127 5128 5129 5130 5131 5132 5133 5134 5135 5136 5137 5138 5139 5140 5141 5142 5143 5144 5145 5146 5147 5148 5149 5150 5151 5152 5153 5154 5155 5156 5157 5158 5159 5160 5161 5162 5163 5164 5165 5166 5167 5168 5169 5170 5171 5172 5173 5174 5175 5176 5177 5178 5179 5180 5181 5182 5183 5184 5185 5186 5187 5188 5189 5190 5191 5192 5193 5194 5195 5196 5197 5198 5199 5200 5201 5202 5203 5204 5205 5206 5207 5208 5209 5210 5211 5212 5213 5214 5215 5216 5217 5218 5219 5220 5221 5222 5223 5224 5225 5226 5227 5228 5229 5230 5231 5232 5233 5234 5235 5236 5237 5238 5239 5240 5241 5242 5243 5244 5245 5246 5247 5248 5249 5250 5251 5252 5253 5254 5255 5256 5257 5258 5259 5260 5261 5262 5263 5264 5265 5266 5267 5268 5269 5270 5271 5272 5273 5274 5275 5276 5277 5278 5279 5280 5281 5282 5283 5284 5285 5286 5287 5288 5289 5290 5291 5292 5293 5294 5295 5296	001

Printed in FRANCE © AIRBUS S.A.S. 2007. All rights reserved.

MSN	CONFIGURATION
5297 5298 5299 5300 5301 5302 5303 5304 5305 5306 5307 5308 5309 5310 5311 5312 5313 5314 5315 5316 5317 5318 5319 5320 5321 5322 5323 5324 5325 5326 5327 5328 5329 5330 5331 5332 5333 5334 5335 5336 5337 5338 5339 5340 5341 5342 5343 5344 5345 5346 5347 5348 5349 5350 5351 5352 5353 5354 5355 5356 5357 5358 5359 5360 5361 5362 5363 5364 5365 5366 5367 5368 5369 5370 5371 5372 5373 5374 5375 5376 5377 5378 5379 5380 5381 5382 5383 5384 5385 5386 5387 5388 5389 5390 5391 5392 5393 5394 5395 5396 5397 5398 5399 5400 5401 5402 5403 5404 5405 5406 5407 5408 5409 5410 5411 5412 5413 5414 5415 5416 5417 5418 5419 5420 5421 5422 5423 5424 5425 5426 5427 5428 5429 5430 5431 5432 5433 5434 5435 5436 5437 5438 5439 5440 5441 5442 5443 5444 5445 5446 5447 5448 5449 5450 5451 5452 5453 5454 5455 5456 5457 5458 5459 5460 5461 5462 5463 5464 5465 5466 5467 5468 5469 5470 5471 5472 5473 5474 5475 5476 5477 5478 5479 5480 5481 5482 5483 5484 5485 5486 5487 5488 5489 5490 5491 5492 5493 5494 5495 5496 5497 5498 5499 5500 5501 5502 5503 5504 5505 5506 5507 5508 5509 5510 5511 5512 5513 5514 5515 5516 5517 5518 5519 5520 5521 5522 5523 5524 5525 5526 5527 5528 5529 5530 5531 5532 5533 5534 5535 5536 5537 5538 5539 5540 5541 5542 5543 5544 5545 5546 5547 5548 5549 5550 5551 5552 5553 5554 5555 5556 5557 5558 5559 5560 5561 5562 5563 5564 5565 5566 5567 5568 5569 5570 5571 5572 5573 5574 5575 5576 5577 5578 5579 5580 5581 5582 5583 5584 5585 5586 5587 5588 5589 5590 5591 5592 5593 5594 5595 5596 5597 5598 5599 5600 5601 5602 5603 5604 5605 5606 5607 5608 5609 5610 5611 5612 5613 5614 5615 5616 5617 5618 5619 5620 5621 5622 5623 5624 5625 5626 5627 5628 5629 5630 5631 5632 5633 5634 5635 5636 5637 5638 5639 5640 5641 5642 5643 5644 5645 5646 5647 5648 5649 5650 5651 5652 5653 5654 5655 5656 5657 5658 5659 5660 5661 5662 5663 5664 5665 5666 5667 5668 5669 5670 5671 5672 5673 5674 5675 5676 5677 5678 5679 5680 5681 5682 5683 5684 5685 5686 5687 5688 5689 5690 5691 5692 5693 5694 5695 5696 5697 5698 5699 5700 5701 5702 5703 5704 5705 5706 5707 5708 5709 5710 5711 5712 5713 5714 5715 5716 5717 5718 5719 5720 5721 5722 5723 5724 5725 5726 5727 5728 5729 5730 5731 5732 5733 5734 5735 5736 5737 5738 5739 5740 5741 5742 5743 5744 5745 5746 5747 5748 5749 5750 5751 5752 5753 5754 5755 5756 5757 5758 5759 5760 5761 5762 5763 5764 5765 5766 5767 5768 5769 5770 5771 5772 5773 5774 5775 5776 5777 5778 5779 5780 5781 5782 5783 5784 5785 5786 5787 5788 5789 5790 5791 5792 5793 5794 5795 5796 5797 5798 5799 5800 5801 5802 5803 5804 5805 5806 5807 5808 5809 5810 5811 5812 5813 5814 5815 5816 5817 5818 5819 5820 5821 5822 5823 5824 5825 5826 5827 5828 5829 5830 5831 5832 5833 5834 5835 5836 5837 5838 5839 5840 5841 5842 5843 5844 5845 5846 5847 5848 5849 5850 5851 5852 5853 5854 5855 5856 5857	001

Printed in FRANCE © AIRBUS S.A.S. 2007. All rights reserved.

MSN	CONFIGURATION
5858 5859 5860 5861 5862 5863 5864 5865 5866 5867 5868 5869 5870 5871 5872 5873 5874 5875 5876 5877 5878 5879 5880 5881 5882 5883 5884 5885 5886 5887 5888 5889 5890 5891 5892 5893 5894 5895 5896 5897 5898 5899 5900 5901 5902 5903 5904 5905 5906 5907 5908 5909 5910 5911 5912 5913 5914 5915 5916 5917 5918 5919 5920 5921 5922 5923 5924 5925 5926 5927 5928 5929 5930 5931 5932 5933 5934 5935 5936 5937 5938 5939 5940 5941 5942 5943 5944 5945 5946 5947 5948 5949 5950 5951 5952 5953 5954 5955 5956 5957 5958 5959 5960 5961 5962 5963 5964 5965 5966 5967 5968 5969 5970 5971 5972 5973 5974 5975 5976 5977 5978 5979 5980 5981 5982 5983 5984 5985 5986 5987 5988 5989 5990 5991 5992 5993 5994 5995 5996 5997 5998 5999 6000 6001 6002 6003 6004 6005 6006 6007 6008 6009 6010 6011 6012 6013 6014 6015 6016 6017 6018 6019 6020 6021 6022 6023 6024 6025 6026 6027 6028 6029 6030 6031 6032 6033 6034 6035 6036 6037 6038 6039 6040 6041 6042 6043 6044 6045 6046 6047 6048 6049 6050 6051 6052 6053 6054 6055 6056 6057 6058 6059 6060 6061 6062 6063 6064 6065 6066 6067 6068 6069 6070 6071 6072 6073 6074 6075 6076 6077 6078 6079 6080 6081 6082 6083 6084 6085 6086 6087 6088 6089 6090 6091 6092 6093 6094 6095 6096 6097 6098 6099 6100 6102 6103 6104 6105 6106 6107 6108 6109 6110 6111 6112 6113 6114 6115 6116 6117 6118 6119 6120 6121 6122 6123 6124 6125 6126 6127 6128 6129 6130 6131 6132 6133 6134 6135 6136 6137 6138 6139 6140 6141 6142 6143 6144 6145 6146 6147 6148 6149 6150 6151 6152 6153 6154 6155 6156 6157 6158 6159 6160 6161 6162 6163 6164 6165 6166 6167 6168 6169 6170 6171 6172 6173 6174 6175 6176 6177 6178 6179 6180 6181 6182 6183 6184 6185 6186 6187 6188 6189 6190 6191 6192 6193 6194 6195 6196 6197 6198 6199 6200 6201 6202 6203 6204 6205 6206 6207 6208 6209 6210 6211 6212 6213 6214 6215 6216 6217 6218 6219 6220 6221 6222 6223 6224 6225 6226 6227 6228 6229 6230 6231 6232 6233 6234 6235 6236 6237 6238 6239 6240 6241 6242 6243 6244 6245 6246 6247 6248 6249 6250 6251 6252 6253 6254 6255 6256 6257 6258 6259 6260 6261 6262 6263 6264 6265 6266 6267 6268 6269 6270 6271 6272 6273 6274 6275 6276 6277 6278 6279 6280 6281 6282 6283 6284 6285 6287 6288 6289 6290 6291 6292 6293 6294 6295 6296 6297 6298 6299 6300 6301 6302 6303 6304 6305 6306 6307 6308 6309 6310 6311 6312 6313 6314 6315 6316 6317 6318 6319 6320 6321 6322 6323 6324 6325 6326 6327 6328 6329 6330 6331 6332 6333 6334 6335 6336 6337 6338 6339 6340 6341 6342 6343 6344 6345 6346 6347 6348 6349 6350 6351 6352 6353 6354 6355 6356 6357 6358 6359 6360 6361 6362 6363 6364 6365 6366 6367 6368 6369 6370 6371 6372 6373 6374 6375 6376 6377 6378 6379 6380 6381 6382 6383 6384 6385 6386 6387 6388 6389 6390 6391 6392 6393 6394 6395 6396 6397 6398 6399 6400 6401 6402 6403 6404 6405 6406 6407 6408 6409 6410 6411 6412 6413 6414 6415 6416 6417 6418 6420 6421	001

Printed in FRANCE © AIRBUS S.A.S. 2007. All rights reserved.

MSN	CONFIGURATION
6422 6423 6424 6425 6426 6427 6428 6429 6430 6431 6432 6433 6434 6435 6436 6437 6438 6439 6440 6441 6442 6443 6444 6445 6446 6447 6448 6449 6450 6451 6452 6453 6454 6455 6456 6457 6458 6459 6460 6461 6462 6463 6465 6466 6467 6468 6469 6470 6471 6472 6473 6474 6475 6476 6477 6478 6479 6480 6481 6482 6483 6484 6485 6486 6487 6488 6489 6490 6491 6492 6493 6494 6495 6496 6497 6498 6499 6500 6501 6502 6503 6504 6505 6506 6507 6508 6509 6510 6511 6512 6513 6514 6515 6516 6517 6518 6519 6520 6521 6522 6523 6524 6525 6526 6527 6528 6529 6530 6531 6532 6533 6534 6535 6536 6537 6538 6539 6540 6541 6542 6543 6544 6545 6546 6547 6548 6549 6550 6551 6552 6553 6554 6555 6556 6557 6558 6559 6560 6561 6562 6563 6564 6565 6566 6567 6568 6569 6570 6571 6572 6573 6574 6575 6576 6577 6578 6579 6580 6581 6582 6583 6584 6585 6586 6587 6588 6589 6590 6591 6592 6593 6594 6595 6596 6597 6598 6599 6600 6601 6602 6603 6604 6605 6606 6607 6608 6609 6610 6611 6612 6613 6614 6615 6616 6617 6618 6619 6622 6623 6624 6625 6626 6627 6628 6629 6630 6631 6632 6633 6634 6635 6636 6637 6638 6639 6640 6641 6643 6644 6645 6646 6647 6648 6649 6650 6651 6652 6653 6654 6655 6656 6657 6658 6659 6660 6661 6662 6663 6664 6665 6666 6667 6668 6669 6670 6671 6672 6674 6675 6676 6677 6678 6679 6680 6681 6682 6683 6684 6685 6686 6687 6688 6689 6690 6691 6692 6693 6694 6695 6696 6697 6699 6700 6739	001

(5) Configuration definition

**CONF 001
Config. 001 is valid for all the aircraft given in the effectivity of this Service Bulletin as a standard configuration.

(6) Material Effectivity

MATERIAL	QTY PER A/C	SEE NOTES
Consumable CMLC01	1	
Kit 531290C01R00	2	
Reidentified part set REIDC01	1	
Standard tool TOOLC01	1	
Standard tool TOOLC02	1	

B. CONCURRENT REQUIREMENTS

Accomplishment of this Service Bulletin requires the prior or simultaneous accomplishment of the following Service Bulletin as per effectivity specified in this Service Bulletin:

Service Bulletin No. A320-53-1288

NOTE: Service Bulletin No. A320-53-1288 (FUSELAGE - REAR FUSELAGE - INSPECTION OF THE DOOR STOP FITTING HOLES AT FR66 AND FR68 LHS/ RHS).

Printed in FRANCE © AIRBUS S.A.S. 2007. All rights reserved.

C. REASON

(1) History

Following inspection programs on in service aircraft cracks were detected at door stop fitting fasteners holes in Frame (FR) FR66 and FR68. To prevent this area from potential major repairs the fastener holes must be reinforced.

(2) Objective/Action

This Service Bulletin details the cold working of the fastener holes in the airframe structure for the door stop fittings installation in FR66 and FR68.

The procedure as described in this Service Bulletin is to be performed if no Airbus repair and/or repair improvement has been previously performed in the same area. In case of repairs performed previously, please contact AIRBUS Repair Support department for further instructions.

(3) Advantages

Accomplishment of this Service Bulletin will contribute to prevent further inspections and major repairs in the airframe structure of FR66 and FR68 stop fitting area.

(4) Operational/Maintenance Consequences

The accomplishment of this Service Bulletin will increase the inspection interval requirements as per Inspection Service Bulletin 53-1288.

D. DESCRIPTION

To accomplish this Service Bulletin it is necessary to :

Task 531290-831-942-001: Modification

(1) Remove the Stop Fittings on LH Side

(2) Remove the Stop Fittings on RH Side

(3) Do the ROTOTEST in Frame Web Holes on LH Side

(4) Do the ROTOTEST in Frame Web Holes on RH Side

(5) Do the Cold Working Process in Frame Web Holes on LH Side

(6) Do the Cold Working Process in Frame Web Holes on RH Side

(7) Oversize the Stop Fitting Holes on LH Side

(8) Oversize the Stop Fitting Holes on RH Side

(9) Re-identify the Stop Fittings on LH Side

(10) Re-identify the Stop Fittings on RH Side

Printed in FRANCE © AIRBUS S.A.S. 2007. All rights reserved.

(11) Install the Stop Fittings on LH Side

(12) Install the Stop Fittings on RH Side

E. COMPLIANCE

(1) Classification

RECOMMENDED: Service Bulletin recommended to be accomplished to prevent significant operational disruptions.

(2) Accomplishment Timescale

Accomplishment of this Service Bulletin is recommended at 13800FC and later to reach the Extended Service Goal (ESG) (60000FC).

F. APPROVAL

The technical content of this document is approved under the authority of Design Organization Approval No. EASA.21J.031.

If an aircraft listed in the effectivity has a modification or repair embodied that is not of AIRBUS origin, and which affects the content of this Service Bulletin, the operator is responsible for obtaining approval by its airworthiness authority for any adaptation necessary before incorporation of the Service Bulletin.

G. MANPOWER

The manpower estimates given in this Service Bulletin are based on the direct labor cost to do the work. These estimates assume that the work will be done by experienced personnel, and may need to be revised upwards to suit operator's circumstances. The estimates do not include the time to prepare, plan or inspect the work. Manufacture and procurement of parts and tools, drying times for paints, sealants, etc., and general administration work are also not included.

Task 531290-831-942-001: Modification	
Get Access	3.00
On Aircraft	
Remove the Stop Fittings on LH Side	1.50
Remove the Stop Fittings on RH Side	1.50
Do the ROTOTEST in Frame Web Holes on LH Side	1.00
Do the ROTOTEST in Frame Web Holes on RH Side	1.00
Do the Cold Working Process in Frame Web Holes on LH Side	3.00
Do the Cold Working Process in Frame Web Holes on RH Side	3.00
Oversize the Stop Fitting Holes on LH Side	1.50
Oversize the Stop Fitting Holes on RH Side	1.50
Re-identify the Stop Fittings on LH Side	0.50
Re-identify the Stop Fittings on RH Side	0.50
Install the Stop Fittings on LH Side	3.00

Printed in FRANCE © AIRBUS S.A.S. 2007. All rights reserved.

Task 531290-831-942-001: Modification	
Install the Stop Fittings on RH Side	3.00
Close-Up	3.00
TOTAL MANHOURS	27.00
ELAPSED TIME (HOURS)	14.00

NOTE: For an explanation of the manhours and elapsed time, refer to the Gantt Chart, Fig. A-SAAAA given in Appendix 01.

H. WEIGHT AND BALANCE

Not Changed

I. ELECTRICAL LOAD DATA

Not Changed

J. REFERENCES

Aircraft Maintenance Manual (AMM)	06-20-00 06-31-53 06-41-52 06-41-53 12-34-24 20-21-11 52-10-00 52-13-00 52-13-31 53-41-00
Consumable Material List (CML)	
Elec. Std. Practices Manual (ESPM)	20-55-00
In Service Information (ISI)	ISI 51.48.00001
Non Destructive Test Manual (NTM)	53-41-29
Process and Material Specification (PMS)	Process and Material Specification (PMS) 01-06-12
Service Bulletin (SB)	A320-53-1288
Standards Manual (SM)	
Structural Repair Manual (SRM)	51-23-12 51-24-00 51-40-00 51-42-00 51-43-00 51-44-00 51-48-00 51-75-12

K. PUBLICATION AFFECTED

Illustrated Parts Catalog (IPC)	53-46-04

L. INTERCHANGEABILITY/MIXABILITY

Not Applicable

M. SPARES

None

Printed in FRANCE © AIRBUS S.A.S. 2007. All rights reserved.

2. MATERIAL INFORMATION

**CONF ALL

A. MATERIAL - PRICE AND AVAILABILITY

(1) Procurement Addresses

Customers with aircraft shown in the effectivity of this Service Bulletin should send a purchase order to AIRBUS. Quote the number of this Service Bulletin. The address is:

Kit 531290C01R00	AIRBUS Material, Logistics and Suppliers ATP II B, Hein-Sass-Weg 24 21129 HAMBURG GERMANY For ordering by internet: http://spares.airbus.com For ordering by E-mail: airbus.kit@airbus.com Telephone Hotlines: A350/A380: +49 40 743 51775 A330/340, A300/310: +49 40 743 51616 A318/319/320/321: +49 40 743 51660

(2) Price and Availability

Kit 531290C01R00	
Cost	610.00 USD
Availability	120 calendar days from receipt of order

The availability given above is the standard lead time from the date of your purchase order. If items are required before this time, please include a retrofit planning schedule with your order so that we can try to comply with your requirements.

The sales terms (costs and availability) are estimated in relation to economic conditions. The latest valid price and lead time for ordering purposes shall be obtained through the AirbusSpares portal or through a request for quotation to airbus.kit@airbus.com.

B. INDUSTRY SUPPORT INFORMATION

AIRBUS will not provide industry support for accomplishment of this Service Bulletin.

C. LIST OF COMPONENTS

Kit 531290C01R00

ITEM	NEW PART N°	QTY (UM)	KEYWORD	ITEM	OLD PART N°	INT	SEE NOTES
4	NAS6604-6Y	56	BOLT				
6	NAS1726-4E	56	NUT				

Printed in FRANCE © AIRBUS S.A.S. 2007. All rights reserved.

NOTE: If you find part numbers of hardware components in the related kit(s) which you cannot identify in the LIST OF COMPONENTS of this Service Bulletin, refer to Standards Manual (SM). The SM will give you the correct part number to part number relationship.

D. LIST OF MATERIALS - OPERATOR SUPPLIED

(1) Consumable Materials

Consumable CMLC01

ITEM	DESCRIPTION	REFERENCE TO CML MAT. No.	QTY PER A/C	SEE NOTES
	Wash Primer - Structure	04CMA2	As required	
	Coating-- Flexible Structure	04QAB2	As required	
	Polysulfide Sealant - General Purpose Fillet	06AAB1	As required	
	Polysulfide Sealant-General Purpose Interfay	06AAC1	As required	
	Non Aqueous Cleaner-General	08BAA9	As required	
	Corrosion Preventive Compound-Water Displacing	12ADB1	As required	
	Textile-Lint Free Cotton	14SBA1	As required	

(2) Components

None

(3) Equipment

None

E. PARTS TO BE RE-IDENTIFIED BY OPERATOR

Reidentified part set REIDC01

ITEM	NEW PART N°	KEYWORD	ITEM	OLD PART N°	SEE NOTES
2	D5348017920200	FITTING	(1)	D5311245220000	
			(1)	D5348017920000	

F. TOOLING

(1) Tooling - Price and Availability

(a) Procurement Addresses

Operators interested in obtaining the FTI tool kit should contact:

Printed in FRANCE © AIRBUS S.A.S. 2007. All rights reserved.

Standard tool TOOLC01	Fatigue Technology Inc. 401 Andover Park East SEATTLE, WA 98188-7605 USA Internet: http://www.fatiguetech.com Phone: (206) 2462010 Fax: (206) 2449886

Operators interested in obtaining the WCI tool kit should contact:

Standard tool TOOLC02	West Coast Industries Inc. 14900 Whitman Ave. N Seattle, Washington 98133 Tel: (206) 365-7513 Fax: (206) 365-7483 Email: info@coldwork.com Europe, Middle-East, Africa, India and Russia: Tel.: +33 5 61 92 04 91 (France) Email: customer@capaero.com

(b) Price and Availability

Standard tool TOOLC01

Procurement to be negotiated directly with Fatigue Technology Inc (FTI).

Standard tool TOOLC02

Procurement to be negotiated directly with West Coast Industries (WCI).

(2) Tools

Standard tool TOOLC01

ITEM	TOOL N°	TOOL NAME	QTY	SEE NOTES
	DKA320531290-1	Durable tooling	1	(1)
	EKA320531290-1	Expandable tooling	1	(2)
	FTIA320531290-1	Capital tooling	1	(3)

NOTE: FTI has allocated the following tool kit numbers for cold expansion:

For the definition of capital, durable and expendable tools, refer to ISI 51.48.00001.

NOTE: The above list of components is not an AIRBUS Kit, the required parts shall be ordered as necessary through the given channel.

NOTE (1): Durable tooling. Ref: DK-A320-53-1290-1

Printed in FRANCE © AIRBUS S.A.S. 2007. All rights reserved.

The durable tool kit contains the minimum quantity of durable tools necessary to accomplish the Service Bulletin on one aircraft. If the Service Bulletin is to be accomplished on more than one aircraft, the number of durable kits required can be established by reference to ISI 51.48.00001.

NOTE (2): Expendable tooling. Ref: EK-A320-53-1290-1

The expendable tool kit contains the quantity of expendable tools required to accomplish the Service Bulletin on one aircraft. Order one expendable tool kit for every aircraft on which this Service Bulletin is to be accomplished.

NOTE (3): Capital tooling. Ref: FTI-A320-53-1290-1

The capital tools provided in this kit are not specific to this Service Bulletin and are normally already available in operators' stock as a long-term investment or can be loaned from FTI.

Standard tool TOOLC02

ITEM	TOOL N°	TOOL NAME	QTY	SEE NOTES
	DKA320531290-1	Durable tooling	1	(1)
	EKA320531290-1	Expandable tooling	1	(2)
	WCIA320531290-1	Capital Tooling	1	(3)

NOTE: WCI has allocated the following tool kit numbers for cold expansion:

For the definition of capital, durable and expendable tools, refer to ISI 51.48.00001.

NOTE: The above list of components is not an AIRBUS Kit, the required parts shall be ordered as necessary through the given channel.

NOTE (1): Durable tooling. Ref: DK-A320-53-1290-1

The durable tool kit contains the minimum quantity of durable tools necessary to accomplish the Service Bulletin on one aircraft. If the Service Bulletin is to be accomplished on more than one aircraft, the number of durable kits required can be established by reference to ISI 51.48.00001.

NOTE (2): Expendable tooling. Ref: EK-A320-53-1290-1

The expendable tool kit contains the quantity of expendable tools required to accomplish the Service Bulletin on one aircraft. Order one expendable tool kit for every aircraft on which this Service Bulletin is to be accomplished.

NOTE (3): Capital tooling. Ref: WCI-A320-53-1290-1

Printed in FRANCE © AIRBUS S.A.S. 2007. All rights reserved.

The capital tools provided in this kit are not specific to this Service Bulletin and are normally already available in operators' stock as a long-term investment or can be loaned from WCI.

(3) Special Tools

None

Printed in FRANCE © AIRBUS S.A.S. 2007. All rights reserved.

This Page Intentionally Left Blank

Printed in FRANCE © AIRBUS S.A.S. 2007. All rights reserved.

3. ACCOMPLISHMENT INSTRUCTIONS

Task 531290-831-942-001 - Modification

WARNING: MAKE SURE THAT YOU OBEY ALL THE WARNINGS AND ALL THE CAUTIONS INCLUDED IN THE REFERENCED PROCEDURES.

CAUTION: ALWAYS OBEY THE PRECAUTIONS THAT FOLLOW TO KEEP ELECTRICAL WIRING IN A SATISFACTORY CONDITION (ELECTRICALLY AND MECHANICALLY SERVICEABLE). WHEN YOU DO MAINTENANCE WORK, REPAIRS OR MODIFICATIONS, ALWAYS KEEP ELECTRICAL WIRING, COMPONENTS AND THE WORK AREA AS CLEAN AS POSSIBLE. TO DO THIS:

- PUT PROTECTION, SUCH AS PLASTIC SHEETING, CLOTHS, ETC; AS NECESSARY ON WIRING AND COMPONENTS.
- REGULARLY REMOVE ALL SHAVINGS, UNWANTED MATERIAL AND OTHER CONTAMINATION.

THESE PRECAUTIONS WILL DECREASE THE RISK OF CONTAMINATION AND DAMAGE TO THE ELECTRICAL WIRING INSTALLATION.

IF THERE IS CONTAMINATION, REFER TO ESPM 20-55-00.

NOTE: The accomplishment instructions of this Service Bulletin include procedures given in other documents or in other sections of the Service Bulletin. When the words 'refer to' are used and the operator has a procedure accepted by the local authority he belongs to, the accepted alternative procedure can be used. When the words 'in accordance with' are used then the given procedure must be followed.

NOTE: The access and close-up instructions, not comprising return to service tests, in this Service Bulletin do not constitute or affect the technical intent of the Service Bulletin. Operators can therefore, as deemed necessary, omit or add access and/or close-up steps to add flexibility to their maintenance operations as long as the technical intent of the Service Bulletin is met within the set parameters.

NOTE: Manual titles given in the accomplishment instructions are referred to by acronyms. Refer to paragraph 1.J., References, for the definition of acronyms.

NOTE: This Service Bulletin contains the instructions for the on-aircraft maintenance necessary to ensure the continued airworthiness of the aircraft.

For any deviations to the instructions contained herein, contact Airbus for further instructions and approval.

Task Associated Data

Zone	
260	
Access	
Door	832 842

Printed in FRANCE © AIRBUS S.A.S. 2007. All rights reserved.

Manpower	
TOTAL MANHOURS	27.00
ELAPSED TIME (HOURS)	14.00

A. GENERAL

(1) Subtask 531290-910-601-001 - Standard Practices

Manpower Resources	
Skills	NON SPECIFIC

References	
Aircraft Maintenance Manual (AMM)	06-20-00, Page Block 001 06-31-53, Page Block 001 06-41-53, Page Block 001 Task 20-21-11-911-001
Consumable Material List (CML)	
Process and Material Specification (PMS)	Process and Material Specification (PMS) 01-06-12
Structural Repair Manual (SRM)	51-24-00 51-24-00 51-40-00 51-42-00 51-43-00 51-44-00 51-48-00 51-75-12

(a) For the specification of the materials (Mat. No.) given in this Service Bulletin, refer to the Consumable Material List (CML).

(b) For the Frame (FR) identification, refer to AMM 06-31-53, Page Block 001.

(c) For the identification of zones, refer to AMM 06-20-00, Page Block 001.

(d) For the identification of access panels, refer to AMM 06-41-53, Page Block 001.

(e) Remove and install fasteners in accordance with SRM 51-42-00.

(f) Do the cold expansion of the holes in accordance with SRM 51-48-00.

(g) Apply sealant in accordance with SRM 51-24-00.

(h) Obtain fastener hole diameters and drill data in accordance with SRM 51-44-00.

(i) Obtain alternative and substitute fasteners in accordance with SRM 51-43-00.

(j) Renew the protective finish in accordance with SRM 51-75-12.

(k) To torque tighten the standard threaded fasteners, AMM Task 20-21-11-911-001.

Printed in FRANCE © AIRBUS S.A.S. 2007. All rights reserved.

(l) Tag all the parts you must remove and retain to make the subsequent installation easier.

(m) If alternative and substitute fasteners have to be used, you must make sure that the associated nut/collar are compatible in accordance with SRM 51-40-00 "Mating Part" column.

(n) If the length of any fastener specified in this Service Bulletin does not meet installation standards given in SRM Chapter 51, then a fastener of the same specification, or an approved substitute, with a length which meets the installation standards given in SRM Chapter 51 may be used. In addition, washers may be installed for fastener grip length in accordance with SRM Chapter 51.

(o) For the re-identification, refer to Process and Material Specification (PMS) 01-06-12.

(2) Subtask 531290-839-601-001 - Administrative

Manpower Resources	
Skills	NON SPECIFIC

Write in the applicable aircraft records that you have done all the work given in this Service Bulletin.

B. PREPARATION

(1) Subtask 531290-941-601-001 - Job Set-up

Manpower Resources	
Skills	AIRFRAME

References	
Aircraft Maintenance Manual (AMM)	06-41-52, Page Block 001 Task 12-34-24-869-002 Task 52-10-00-010-001 Task 53-41-00-220-812 Task 53-41-00-220-813

NOTE: The items given in this note shall be considered as the basic Aircraft configuration before you start a maintenance task:

- Aircraft on the ground resting on landing gear (the ground safety locks and the wheel chocks are in position on the landing gear)
- Engine shut down, thrust reversers closed and locked
- Aircraft in clean configuration
- Parking brake applied
- Aircraft electrical network de-energized
- Hydraulic systems depressurized

Printed in FRANCE © AIRBUS S.A.S. 2007. All rights reserved.

- Access to the cockpit and cabin is available
- All circuit breakers are in closed position
- All controls in NORM, AUTO or OFF position.

(a) Make sure that the aircraft is electrically grounded, refer to AMM Task 12-34-24-869-002.

(b) Put the access platform(s) in position at the AFT passenger/crew doors 832 and 842.

(c) Open the AFT passenger/crew doors 832 and 842, refer to AMM 06-41-52, Page Block 001 and AMM Task 52-10-00-010-001.

(d) Do the Job Set-up procedure as specified in the Special Detailed Inspection of the Door Stop Fittings Holes at FR66 and FR68, refer to AMM Task 53-41-00-220-812 and AMM Task 53-41-00-220-813.

C. PROCEDURE

(1) Subtask 531290-020-601-001 - Remove the Stop Fittings on LH Side

Work Zones and Access Panels			
	Zone	Access/Work location	
	260	Access	Door 832
		Work location	Frame 66 Frame 68

Manpower Resources	
Manhours	1.50
Minimum number of person	1
Subtask elapsed time	1.50
Skills	AIRFRAME

Material necessary to do the job

Consumable CMLC01				
ITEM	DESCRIPTION	REFERENCE TO CML MAT. No.	QTY PER A/C	SEE NOTES
	Non Aqueous Cleaner-General	08BAA9	As required	
	Textile-Lint Free Cotton	14SBA1	As required	

References	
Aircraft Maintenance Manual (AMM)	Task 52-13-31-000-002
Structural Repair Manual (SRM)	51-42-00
Fig. A-SBAAA Modification of the holes in frame web and stop fittings	Sheet 01 Sheet 02

Printed in FRANCE © AIRBUS S.A.S. 2007. All rights reserved.

(a) Clean the surface of the fasteners:

Refer to Fig. A-SBAAA

Textile-Lint Free Cotton	14SBA1	As required
made moist with		
Non Aqueous Cleaner-General	08BAA9	As required

(b) Remove the door stop fittings from the fuselage frame of the LH Aft passenger crew/door:

Refer to Fig. A-SBAAA

Refer to AMM Task 52-13-31-000-002

In accordance with SRM 51-42-00

14	Stop fittings	D5348017920000	Item (1)	Retain
	NOTE: Retained for modification.			
	or			
14	Stop fittings	D5311245220000	Item (1)	Retain
	NOTE: Retained for modification.			
56	Bolt-Hexagon Head	NAS1304-6	Item (3)	Discard
56	Nuts	NAS1726-4E	Item (5)	Discard

(c) After removal of each fasteners, check on the aircraft the existing hole diameters (6.327mm (0.249in.) to 6.347mm (0.250in.)) and compare with the values of the tables given in the Fig. A-SBAAA Sheet 02 of the Service Bulletin in order to identify deviations.

NOTE: Use the starting drill of the FTI or WCI 8-1-N tool to verify the fastener hole diameter. The fastener hole should be smaller than the starting drill.

NOTE: If the starting hole diameter is bigger than the starting drill, use the starting reamer instead of the starting drill to verify the fastener hole diameter.

- In case the existing hole diameter is more than or equal to the minimum starting hole diameter, check the area in accordance with the SRM 53-41-12. If a SRM repair had been applied no additional cold working is permitted. These holes are already reinforced.

Printed in FRANCE © AIRBUS S.A.S. 2007. All rights reserved.

- In case the existing hole diameter is lower to the minimum starting hole diameter, do SUBTASK 531290-250-601 001 Do the ROTOTEST in Frame Web Holes on LH Side .

(2) Subtask 531290-020-602-001 - Remove the Stop Fittings on RH Side

Work Zones and Access Panels			
	Zone	Access/Work location	
	260	Access	Door 842
		Work location	Frame 66 Frame 68

Manpower Resources	
Manhours	1.50
Minimum number of person	1
Subtask elapsed time	1.50
Skills	AIRFRAME

Material necessary to do the job

Consumable CMLC01				
ITEM	DESCRIPTION	REFERENCE TO CML MAT. No.	QTY PER A/C	SEE NOTES
	Non Aqueous Cleaner-General	08BAA9	As required	
	Textile-Lint Free Cotton	14SBA1	As required	

References	
Aircraft Maintenance Manual (AMM)	Task 52-13-31-000-002
Structural Repair Manual (SRM)	51-42-00
Fig. A-SBAAA Modification of the holes in frame web and stop fittings	Sheet 01 Sheet 02

(a) Clean the surface of the fasteners:

Refer to Fig. A-SBAAA

Textile-Lint Free Cotton	14SBA1	As required
made moist with		
Non Aqueous Cleaner-General	08BAA9	As required

(b) Remove the door stop fittings from the fuselage frame of the RH Aft passenger crew/door:

Refer to Fig. A-SBAAA

Printed in FRANCE © AIRBUS S.A.S. 2007. All rights reserved.

Refer to AMM Task 52-13-31-000-002

In accordance with SRM 51-42-00

14	Stop fittings	D5348017920000	Item (1)	Retain

NOTE: Retained for modification.

or

14	Stop fittings	D5311245220000	Item (1)	Retain

NOTE: Retained for modification.

56	Bolt-Hexagon Head	NAS1304-6	Item (3)	Discard
56	Nuts	NAS1726-4E	Item (5)	Discard

(c) After removal of each fasteners, check on the aircraft the existing hole diameters (6.327mm (0.249in.) to 6.347mm (0.250in.)) and compare with the values of the tables given in the Fig. A-SBAAA Sheet 02 of the Service Bulletin in order to identify deviations.

NOTE: Use the starting drill of the FTI or WCI 8-1-N tool to verify the fastener hole diameter. The fastener hole should be smaller than the starting drill.

NOTE: If the starting hole diameter is bigger than the starting drill, use the starting reamer instead of the starting drill to verify the fastener hole diameter.

- In case the existing hole diameter is more than or equal to the minimum starting hole diameter, check the area in accordance with the SRM 53-41-12. If a SRM repair had been applied no additional cold working is permitted. These holes are already reinforced.

- In case the existing hole diameter is lower to the minimum starting hole diameter, do SUBTASK 531290-250-602 001 Do the ROTOTEST in Frame Web Holes on RH Side .

(3) Subtask 531290-250-601-001 - Do the ROTOTEST in Frame Web Holes on LH Side

Manpower Resources	
Manhours	1.00
Minimum number of person	1
Subtask elapsed time	1.00
Skills	NON DESTRUCTIVE TESTING

References	
Non Destructive Test Manual (NTM)	Task 53-41-29-250-801
Service Bulletin (SB)	A320-53-1288

Printed in FRANCE © AIRBUS S.A.S. 2007. All rights reserved.

(a)

NOTE: If the SB 53-1288 has been applied, it is not necessary to do the following step.

Do the ROTOTEST procedure, in accordance with NTM Task 53-41-29-250-801.

(4) Subtask 531290-250-602-001 - Do the ROTOTEST in Frame Web Holes on RH Side

Work Zones and Access Panels			
	Zone	Access/Work location	
	260	Access	Door 842
		Work location	from Frame 66 to Frame 68

Manpower Resources	
Manhours	1.00
Minimum number of person	1
Subtask elapsed time	1.00
Skills	NON DESTRUCTIVE TESTING

References	
Non Destructive Test Manual (NTM)	Task 53-41-29-250-801
Service Bulletin (SB)	A320-53-1288

(a)

NOTE: If the SB 53-1288 has been applied, it is not necessary to do the following step.

Do the ROTOTEST procedure, in accordance with NTM Task 53-41-29-250-801.

(5) Subtask 531290-831-601-001 - Do the Cold Working Process in Frame Web Holes on LH Side

Work Zones and Access Panels			
	Zone	Access/Work location	
	260	Access	Door 832
		Work location	Frame 66 Frame 68

Manpower Resources	
Manhours	3.00
Minimum number of person	1
Subtask elapsed time	3.00
Skills	AIRFRAME

Printed in FRANCE © AIRBUS S.A.S. 2007. All rights reserved.

Material necessary to do the job

Consumable CMLC01				
ITEM	DESCRIPTION	REFERENCE TO CML MAT. No.	QTY PER A/C	SEE NOTES
	Non Aqueous Cleaner-General	08BAA9	As required	
	Textile-Lint Free Cotton	14SBA1	As required	

Standard tool TOOLC01				
ITEM	TOOL N°	TOOL NAME	QTY	SEE NOTES
	DKA320531290-1	Durable tooling	1	(1)
	EKA320531290-1	Expandable tooling	1	(2)
	FTIA320531290-1	Capital tooling	1	(3)

NOTE: FTI has allocated the following tool kit numbers for cold expansion:

For the definition of capital, durable and expendable tools, refer to ISI 51.48.00001.

NOTE: The above list of components is not an AIRBUS Kit, the required parts shall be ordered as necessary through the given channel.

NOTE (1): Durable tooling. Ref: DK-A320-53-1290-1

The durable tool kit contains the minimum quantity of durable tools necessary to accomplish the Service Bulletin on one aircraft. If the Service Bulletin is to be accomplished on more than one aircraft, the number of durable kits required can be established by reference to ISI 51.48.00001.

NOTE (2): Expendable tooling. Ref: EK-A320-53-1290-1

The expendable tool kit contains the quantity of expendable tools required to accomplish the Service Bulletin on one aircraft. Order one expendable tool kit for every aircraft on which this Service Bulletin is to be accomplished.

NOTE (3): Capital tooling. Ref: FTI-A320-53-1290-1

The capital tools provided in this kit are not specific to this Service Bulletin and are normally already available in operators' stock as a long-term investment or can be loaned from FTI.

Standard tool TOOLC02				
ITEM	TOOL N°	TOOL NAME	QTY	SEE NOTES
	DKA320531290-1	Durable tooling	1	(1)
	EKA320531290-1	Expandable tooling	1	(2)
	WCIA320531290-1	Capital Tooling	1	(3)

Printed in FRANCE © AIRBUS S.A.S. 2007. All rights reserved.

NOTE: WCI has allocated the following tool kit numbers for cold expansion:

For the definition of capital, durable and expendable tools, refer to ISI 51.48.00001.

NOTE: The above list of components is not an AIRBUS Kit, the required parts shall be ordered as necessary through the given channel.

NOTE (1): Durable tooling. Ref: DK-A320-53-1290-1

The durable tool kit contains the minimum quantity of durable tools necessary to accomplish the Service Bulletin on one aircraft. If the Service Bulletin is to be accomplished on more than one aircraft, the number of durable kits required can be established by reference to ISI 51.48.00001.

NOTE (2): Expendable tooling. Ref: EK-A320-53-1290-1

The expendable tool kit contains the quantity of expendable tools required to accomplish the Service Bulletin on one aircraft. Order one expendable tool kit for every aircraft on which this Service Bulletin is to be accomplished.

NOTE (3): Capital tooling. Ref: WCI-A320-53-1290-1

The capital tools provided in this kit are not specific to this Service Bulletin and are normally already available in operators' stock as a long-term investment or can be loaned from WCI.

References	
Structural Repair Manual (SRM)	51-44-00 51-48-00
Fig. A-SBAAA Modification of the holes in frame web and stop fittings	Sheet 01 Sheet 02

(a) Oversize and deburr the holes to the starting hole diameter:

Refer to Fig. A-SBAAA Sheet 02

In accordance with SRM 51-44-00

Use FTI tool list No.

DKA320531290-1 Durable tooling 1

or

Use WCI tool list No.

DKA320531290-1 Durable tooling 1

Printed in FRANCE © AIRBUS S.A.S. 2007. All rights reserved.

(b) Clean the drilled areas with:

Textile-Lint Free Cotton	14SBA1	As required
made moist with		
Non Aqueous Cleaner-General	08BAA9	As required

(c) Install the sleeves:

Refer to Fig. A-SBAAA Sheet 02

In accordance with SRM 51-48-00

Use FTI tool list No.

EKA320531290-1	Expandable tooling	1

or

Use WCI tool list No.

EKA320531290-1	Expandable tooling	1

(d) Do the cold expansion of the fastener holes:

In accordance with SRM 51-48-00

Use FTI tool list No.

FTIA320531290-1	Capital tooling	1

or

Use WCI tool list No.

WCIA320531290-1	Capital Tooling	1

(e) Remove the sleeves.

(f) Ream and deburr the holes to the final hole diameter:

Refer to Fig. A-SBAAA Sheet 02

In accordance with SRM 51-44-00

Use FTI tools list No.

DKA320531290-1	Durable tooling	1

or

Use WCI tool list No.

Printed in FRANCE © AIRBUS S.A.S. 2007. All rights reserved.

DKA320531290-1 Durable tooling 1

(g) Clean the drilled areas:

Textile-Lint Free Cotton 14SBA1 As required

made moist with

Non Aqueous Cleaner-General 08BAA9 As required

(6) Subtask 531290-831-602-001 - Do the Cold Working Process in Frame Web Holes on RH Side

Work Zones and Access Panels			
	Zone	Access/Work location	
	260	Access	Door 842
		Work location	Frame 66 Frame 68

Manpower Resources	
Manhours	3.00
Minimum number of person	1
Subtask elapsed time	3.00
Skills	AIRFRAME

Material necessary to do the job

Consumable CMLC01

ITEM	DESCRIPTION	REFERENCE TO CML MAT. No.	QTY PER A/C	SEE NOTES
	Non Aqueous Cleaner-General	08BAA9	As required	
	Textile-Lint Free Cotton	14SBA1	As required	

Standard tool TOOLC01

ITEM	TOOL N°	TOOL NAME	QTY	SEE NOTES
	DKA320531290-1	Durable tooling	1	(1)
	EKA320531290-1	Expandable tooling	1	(2)
	FTIA320531290-1	Capital tooling	1	(3)

NOTE: FTI has allocated the following tool kit numbers for cold expansion:

For the definition of capital, durable and expendable tools, refer to ISI 51.48.00001.

NOTE: The above list of components is not an AIRBUS Kit, the required parts shall be ordered as necessary through the given channel.

Printed in FRANCE © AIRBUS S.A.S. 2007. All rights reserved.

NOTE (1): Durable tooling. Ref: DK-A320-53-1290-1

The durable tool kit contains the minimum quantity of durable tools necessary to accomplish the Service Bulletin on one aircraft. If the Service Bulletin is to be accomplished on more than one aircraft, the number of durable kits required can be established by reference to ISI 51.48.00001.

NOTE (2): Expendable tooling. Ref: EK-A320-53-1290-1

The expendable tool kit contains the quantity of expendable tools required to accomplish the Service Bulletin on one aircraft. Order one expendable tool kit for every aircraft on which this Service Bulletin is to be accomplished.

NOTE (3): Capital tooling. Ref: FTI-A320-53-1290-1

The capital tools provided in this kit are not specific to this Service Bulletin and are normally already available in operators' stock as a long-term investment or can be loaned from FTI.

Standard tool TOOLC02				
ITEM	TOOL N°	TOOL NAME	QTY	SEE NOTES
	DKA320531290-1	Durable tooling	1	(1)
	EKA320531290-1	Expandable tooling	1	(2)
	WCIA320531290-1	Capital Tooling	1	(3)

NOTE: WCI has allocated the following tool kit numbers for cold expansion:

For the definition of capital, durable and expendable tools, refer to ISI 51.48.00001.

NOTE: The above list of components is not an AIRBUS Kit, the required parts shall be ordered as necessary through the given channel.

NOTE (1): Durable tooling. Ref: DK-A320-53-1290-1

The durable tool kit contains the minimum quantity of durable tools necessary to accomplish the Service Bulletin on one aircraft. If the Service Bulletin is to be accomplished on more than one aircraft, the number of durable kits required can be established by reference to ISI 51.48.00001.

NOTE (2): Expendable tooling. Ref: EK-A320-53-1290-1

The expendable tool kit contains the quantity of expendable tools required to accomplish the Service Bulletin on one aircraft. Order one expendable tool kit for every aircraft on which this Service Bulletin is to be accomplished.

NOTE (3): Capital tooling. Ref: WCI-A320-53-1290-1

Printed in FRANCE © AIRBUS S.A.S. 2007. All rights reserved.

The capital tools provided in this kit are not specific to this Service Bulletin and are normally already available in operators' stock as a long-term investment or can be loaned from WCI.

References	
Structural Repair Manual (SRM)	51-44-00 51-48-00
Fig. A-SBAAA Modification of the holes in frame web and stop fittings	Sheet 01 Sheet 02

(a) Oversize and deburr the holes to the starting hole:

Refer to Fig. A-SBAAA Sheet 02

In accordance with SRM 51-44-00

Use FTI tool list No.

DKA320531290-1	Durable tooling	1

or

Use WCI tool list No.

DKA320531290-1	Durable tooling	1

(b) Clean the drilled areas with:

Textile-Lint Free Cotton	14SBA1	As required

made moist with

Non Aqueous Cleaner-General	08BAA9	As required

(c) Install the sleeves:

Refer to Fig. A-SBAAA Sheet 02

In accordance with SRM 51-48-00

Use FTI tool list No.

EKA320531290-1	Expandable tooling	1

or

Use WCI tool list No.

EKA320531290-1	Expandable tooling	1

Printed in FRANCE © AIRBUS S.A.S. 2007. All rights reserved.

(d) Do the cold expansion of the fastener holes:

In accordance with SRM 51-48-00

Use FTI tool list No.

FTIA320531290-1	Capital tooling	1

or

Use WCI tool list No.

WCIA320531290-1	Capital Tooling	1

(e) Remove the sleeves.

(f) Ream and deburr the holes to the final hole diameter:

Refer to Fig. A-SBAAA Sheet 02

In accordance with SRM 51-44-00

Use FTI tools list No.

DKA320531290-1	Durable tooling	1

or

Use WCI tool list No.

DKA320531290-1	Durable tooling	1

(g) Clean the drilled areas:

Textile-Lint Free Cotton	14SBA1	As required
made moist with		
Non Aqueous Cleaner-General	08BAA9	As required

(7) Subtask 531290-831-603-001 - Oversize the Stop Fitting Holes on LH Side

Work Zones and Access Panels			
	Zone	Access/Work location	
	260	Access	Door 832

Manpower Resources	
Manhours	1.50
Minimum number of person	1
Subtask elapsed time	1.50
Skills	AIRFRAME

Printed in FRANCE © AIRBUS S.A.S. 2007. All rights reserved.

Material necessary to do the job

Consumable CMLC01				
ITEM	DESCRIPTION	REFERENCE TO CML MAT. No.	QTY PER A/C	SEE NOTES
	Wash Primer - Structure	04CMA2		
	Non Aqueous Cleaner-General	08BAA9	As required	
	Textile-Lint Free Cotton	14SBA1	As required	

References	
Structural Repair Manual (SRM)	51-44-00
Fig. A-SBAAA Modification of the holes in frame web and stop fittings	Sheet 01 Sheet 02

(a) Oversize the four stop fitting holes to a diameter comprised between 7.14 mm (0.281 in) and 7.24 mm (0.285 in):

Refer to Fig. A-SBAAA Sheet 02

In accordance with SRM 51-44-00

(b) Chamfer the for stop fitting holes to a depth of 0.5 mm (0.020 in) and angle of 45 degrees.

Refer to Fig. A-SBAAA Sheet 02

In accordance with SRM 51-44-00

(c) Clean the drilled areas:

Textile-Lint Free Cotton	14SBA1	As required
made moist with		
Non Aqueous Cleaner-General	08BAA9	As required

(d) Protect the for stop fitting holes:

Wash Primer - Structure	04CMA2	As required

(8) Subtask 531290-831-604-001 - Oversize the Stop Fitting Holes on RH Side

Work Zones and Access Panels			
	Zone	Access/Work location	
	260	Access	Door 842

Printed in FRANCE © AIRBUS S.A.S. 2007. All rights reserved.

Manpower Resources	
Manhours	1.50
Minimum number of person	1
Subtask elapsed time	1.50
Skills	AIRFRAME

Material necessary to do the job

Consumable CMLC01				
ITEM	DESCRIPTION	REFERENCE TO CML MAT. No.	QTY PER A/C	SEE NOTES
	Wash Primer - Structure	04CMA2		
	Non Aqueous Cleaner-General	08BAA9	As required	
	Textile-Lint Free Cotton	14SBA1	As required	

References	
Structural Repair Manual (SRM)	51-44-00
Fig. A-SBAAA Modification of the holes in frame web and stop fittings	Sheet 01 Sheet 02

(a) Oversize the four stop fitting holes to a diameter comprised between 7.14 mm (0.281 in) and 7.24 mm (0.285 in):

Refer to Fig. A-SBAAA Sheet 02

In accordance with SRM 51-44-00

(b) Chamfer the four stop fitting holes to a depth of 0.5 mm (0.020 in) and angle of 45 degrees.

Refer to Fig. A-SBAAA Sheet 02

In accordance with SRM 51-44-00

(c) Clean the drilled areas:

Textile-Lint Free Cotton	14SBA1	As required
made moist with		
Non Aqueous Cleaner-General	08BAA9	As required

(d) Protect the four stop fitting holes:

Wash Primer - Structure	04CMA2	As required

Printed in FRANCE © AIRBUS S.A.S. 2007. All rights reserved.

(9) Subtask 531290-930-601-001 - Re-identify the Stop Fittings on LH Side

Work Zones and Access Panels			
	Zone	Access/Work location	
	260	Access	Door 832

Manpower Resources	
Manhours	0.50
Minimum number of person	1
Subtask elapsed time	0.50
Skills	AIRFRAME

Material necessary to do the job

Reidentified part set REIDC01					
ITEM	NEW PART N°	KEYWORD	ITEM	OLD PART N°	SEE NOTES
2	D5348017920200	FITTING	(1)	D5311245220000	
			(1)	D5348017920000	

References	
Process and Material Specification (PMS)	Process and Material Specification (PMS) 01-06-12

(a) Reidentify:

Refer to Process and Material Specification (PMS) 01-06-12

14	Stop fittings	D5348017920000	Item (1)	Retained at removal
	or			
14	Stop fittings	D5311245220000	Item (1)	Retained at removal
	becomes:			
14	Stop Fittings	D5348017920200	Item 2	

(10) Subtask 531290-930-602-001 - Re-identify the Stop Fittings on RH Side

Work Zones and Access Panels			
	Zone	Access/Work location	
	260	Access	Door 842

Printed in FRANCE © AIRBUS S.A.S. 2007. All rights reserved.

Manpower Resources	
Manhours	0.50
Minimum number of person	1
Subtask elapsed time	0.50
Skills	AIRFRAME

Material necessary to do the job

Reidentified part set REIDC01					
ITEM	NEW PART N°	KEYWORD	ITEM	OLD PART N°	SEE NOTES
2	D5348017920200	FITTING	(1)	D5311245220000	
			(1)	D5348017920000	

References	
Process and Material Specification (PMS)	Process and Material Specification (PMS) 01-06-12

(a) Reidentify:

Refer to Process and Material Specification (PMS) 01-06-12

14	Stop fittings	D5348017920000	Item (1)	Retained at removal
	or			
14	Stop fittings	D5311245220000	Item (1)	Retained at removal
	becomes:			
14	Stop Fittings	D5348017920200	Item 2	

(11) Subtask 531290-420-601-001 - Install the Stop Fittings on LH Side

Work Zones and Access Panels			
	Zone	Access/Work location	
	260	Access	Door 832
		Work location	Frame 66 Frame 68

Manpower Resources	
Manhours	3.00
Minimum number of person	1
Subtask elapsed time	3.00
Skills	AIRFRAME

Printed in FRANCE © AIRBUS S.A.S. 2007. All rights reserved.

Material necessary to do the job

Kit 531290C01R00				
ITEM	NEW PART N°	QTY (UM)	KEYWORD	SEE NOTES
4	NAS6604-6Y	56	BOLT	
6	NAS1726-4E	56	NUT	

Reidentified part set REIDC01					
ITEM	NEW PART N°	KEYWORD	ITEM	OLD PART N°	SEE NOTES
2	D5348017920200	FITTING			

Consumable CMLC01				
ITEM	DESCRIPTION	REFERENCE TO CML MAT. No.	QTY PER A/C	SEE NOTES
	Coating-- Flexible Structure	04QAB2	As required	
	Polysulfide Sealant - General Purpose Fillet	06AAB1	As required	
	Polysulfide Sealant-General Purpose Interfay	06AAC1	As required	
	Corrosion Preventive Compound-Water Displacing	12ADB1	As required	

References	
Aircraft Maintenance Manual (AMM)	Task 20-21-11-911-001 Task 52-13-31-400-002
Structural Repair Manual (SRM)	51-23-12 51-24-00 51-40-00 51-42-00 51-43-00 51-75-12
Fig. A-SBAAA Modification of the holes in frame web and stop fittings	Sheet 01 Sheet 02

(a) Apply sealant to the interface between the stop fittings and the frame web:

Refer to Fig. A-SBAAA Sheet 02

In accordance with SRM 51-24-00

Polysulfide Sealant- General Purpose Interfay	06AAC1	As required

Printed in FRANCE © AIRBUS S.A.S. 2007. All rights reserved.

(b) Do the installation of the door stop fittings on the fuselage frame of the LH Aft passenger crew/door:

Refer to Fig. A-SBAAA

Refer to AMM Task 52-13-31-400-002

Refer to AMM Task 20-21-11-911-001

In accordance with SRM 51-42-00

In accordance with SRM 51-40-00

In accordance with SRM 51-43-00

14	Stop Fittings	D5348017920200	Item 2
56	Bolts	NAS6604-6Y	Item 4
56	Nuts	NAS1726-4E	Item 6

NOTE: Wet assembly of the fasteners with:

Polysulfide Sealant- General Purpose Interfay	06AAC1	As required

(c) Do a sealant fillet around the door stop fittings:

In accordance with SRM 51-24-00

Polysulfide Sealant - General Purpose Fillet	06AAB1	As required

(d) Renew the protective finish:

Refer to Fig. A-SBAAA Sheet 02

In accordance with SRM 51-75-12

Coating-- Flexible Structure	04QAB2	As required

(e) Protect the fasteners:

In accordance with SRM 51-23-12

Corrosion Preventive Compound-Water Displacing	12ADB1	As required

Printed in FRANCE © AIRBUS S.A.S. 2007. All rights reserved.

(12) Subtask 531290-420-602-001 - Install the Stop Fittings on RH Side

Work Zones and Access Panels			
	Zone	Access/Work location	
	260	Access	Door 842
		Work location	Frame 66 Frame 68

Manpower Resources	
Manhours	3.00
Minimum number of person	1
Subtask elapsed time	3.00
Skills	AIRFRAME

Material necessary to do the job

Kit 531290C01R00				
ITEM	NEW PART N°	QTY (UM)	KEYWORD	SEE NOTES
4	NAS6604-6Y	56	BOLT	
6	NAS1726-4E	56	NUT	

Reidentified part set REIDC01					
ITEM	NEW PART N°	KEYWORD	ITEM	OLD PART N°	SEE NOTES
2	D5348017920200	FITTING			

Consumable CMLC01				
ITEM	DESCRIPTION	REFERENCE TO CML MAT. No.	QTY PER A/C	SEE NOTES
	Coating-- Flexible Structure	04QAB2	As required	
	Polysulfide Sealant - General Purpose Fillet	06AAB1	As required	
	Polysulfide Sealant-General Purpose Interfay	06AAC1	As required	
	Corrosion Preventive Compound-Water Displacing	12ADB1	As required	

References	
Aircraft Maintenance Manual (AMM)	Task 20-21-11-911-001 Task 52-13-31-400-002
Structural Repair Manual (SRM)	51-23-12 51-24-00 51-40-00 51-42-00 51-43-00 51-75-12

Printed in FRANCE © AIRBUS S.A.S. 2007. All rights reserved.

References	
Fig. A-SBAAA Modification of the holes in frame web and stop fittings	Sheet 01 Sheet 02

(a) Apply to the interface between the stop fittings and the frame web:

Refer to Fig. A-SBAAA Sheet 02

In accordance with SRM 51-24-00

Polysulfide Sealant- General Purpose Interfay	06AAC1	As required

(b) Do the installation of the door stop fittings on the fuselage frame of the RH Aft passenger crew/door:

Refer to Fig. A-SBAAA

Refer to AMM Task 52-13-31-400-002

Refer to AMM Task 20-21-11-911-001

In accordance with SRM 51-42-00

In accordance with SRM 51-40-00

In accordance with SRM 51-43-00

14	Stop Fittings	D5348017920200	Item 2
56	Bolts	NAS6604-6Y	Item 4
56	Nuts	NAS1726-4E	Item 6

NOTE: Wet assembly of the fasteners with:

Polysulfide Sealant- General Purpose Interfay	06AAC1	As required

(c) Do a sealant fillet around the door stop fittings:

In accordance with SRM 51-24-00

Polysulfide Sealant - General Purpose Fillet	06AAB1	As required

(d) Renew the protective finish:

Refer to Fig. A-SBAAA Sheet 02

Printed in FRANCE © AIRBUS S.A.S. 2007. All rights reserved.

In accordance with SRM 51-75-12

Coating-- Flexible Structure	04QAB2	As required

(e) Protect the fasteners:

In accordance with SRM 51-23-12

Corrosion Preventive Compound-Water Displacing	12ADB1	As required

D. TEST

(1) Subtask 531290-700-601-001 - Do the Test of the Door Setting after Closing

Work Zones and Access Panels			
	Zone	Access/Work location	
	260	Access	Door 842, Door 832
		Work location	from Frame 66 to Frame 68

Manpower Resources	
Skills	AIRFRAME

References	
Aircraft Maintenance Manual (AMM)	Task 52-13-00-820-001

(a) After closing the AFT passenger door check the clearance of the door stops and if necessary readjust them, refer to AMM Task 52-13-00-820-001.

E. CLOSE-UP

(1) Subtask 531290-942-601-001 - Close-up

Manpower Resources	
Skills	AIRFRAME

References	
Aircraft Maintenance Manual (AMM)	06-41-52, Page Block 001 Task 52-10-00-410-001 Task 53-41-00-220-812 Task 53-41-00-220-813

(a) Make sure that the work areas are clean and clear of tools and other items of equipment.

(b) Do the Close-up procedure as specified in the Special Detailed Inspection of the Door Stop Fittings Holes at FR66 and FR68, refer toAMM Task 53-41-00-220-812 and AMM Task 53-41-00-220-813.

Printed in FRANCE © AIRBUS S.A.S. 2007. All rights reserved.

(c) Close the Aft passenger/crew doors 832 and 842, refer to AMM 06-41-52, Page Block 001 and AMM Task 52-10-00-410-001.

(d) Remove the access platforms.

(e) Put the aircraft back to its initial configuration.

Printed in FRANCE © AIRBUS S.A.S. 2007. All rights reserved.

**CONF ALL

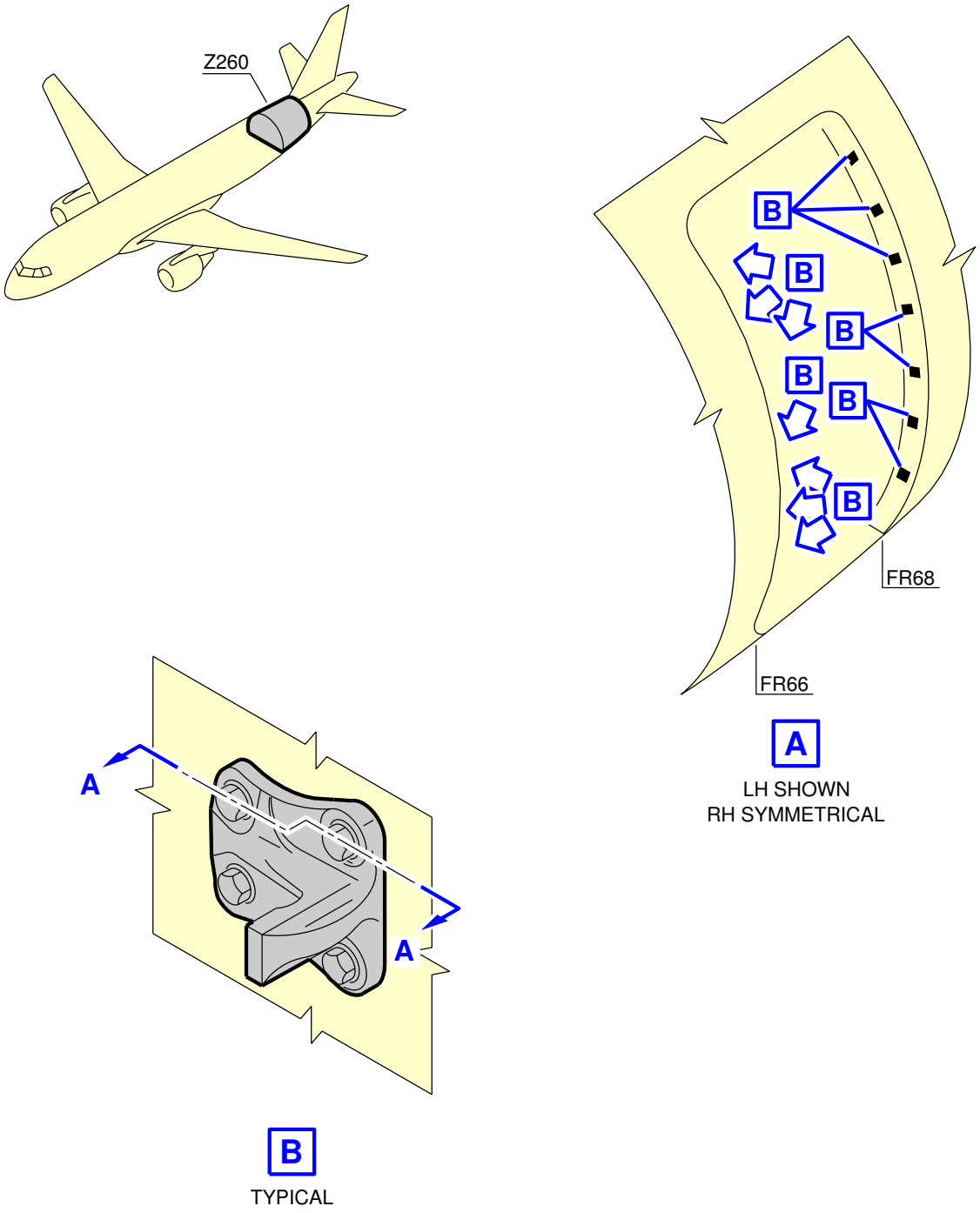

N_SB_531290_0_BAAA_01_00

Figure A-SBAAA - Sheet 01
Modification of the holes in frame web and stop fittings

Printed in FRANCE © AIRBUS S.A.S. 2007. All rights reserved.

**CONF ALL

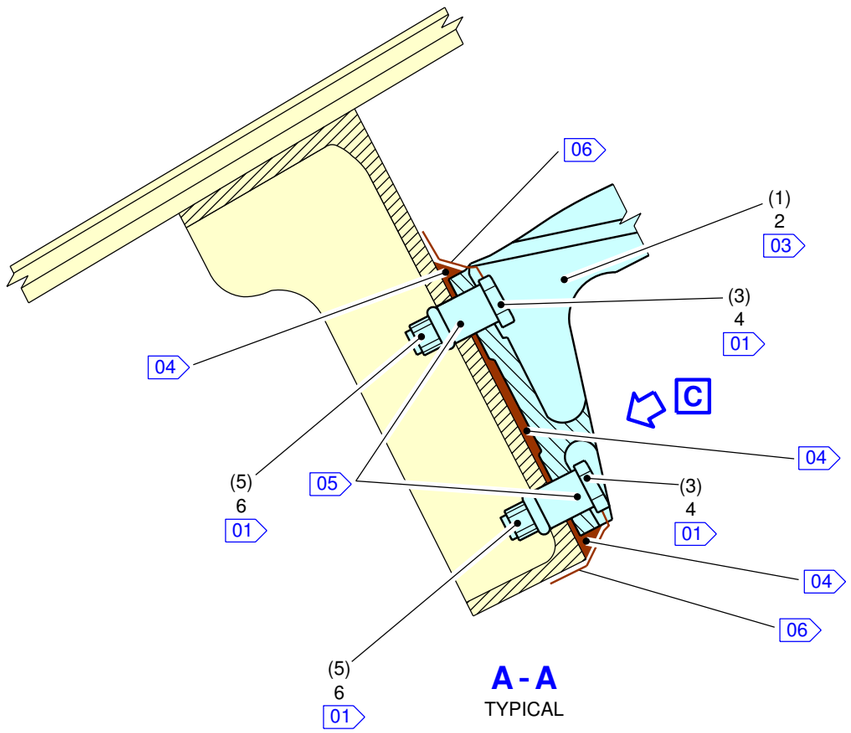

A - A
TYPICAL

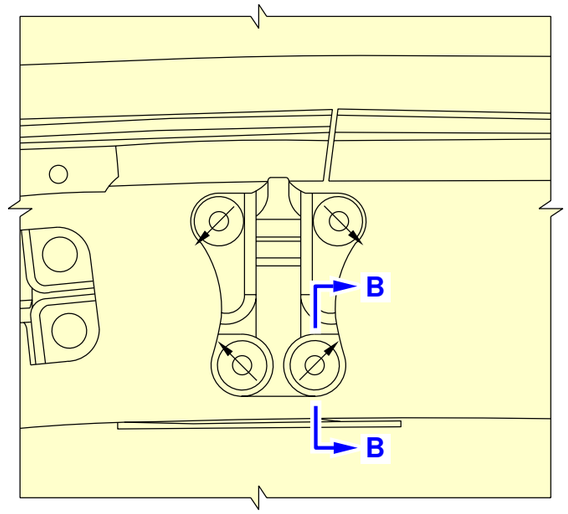

C 07

OLD ITEM	NEW ITEM	P/N	DESCRIPTION	STDN	STARTING HOLE DIAMETER		FINAL HOLE DIAMETER		SIZE / FIT TYPE	NOTE
					MIN	MAX	MIN	MAX		
(3)	4	NAS6604–6Y	BOLT	8–1–N	6.38 mm (0.251 in)	6.45 mm (0.254 in)	7.132 mm (0.281 in)	7.171 mm (0.282 in)	SECOND OVERSIZE TRANSITION FIT	02
(5)	6	NAS1726–4E	NUT							

NOTE:

01 CLEAN THE SURFACE WITH MATERIAL No 08BAA9

02 COLD WORKING PROCESS IN THE FOUR HOLES IN FRAME WEB IN ACCORDANCE WITH SRM 51–48–00, 4% EXPANSION

03 OVERSIZE THE FOUR STOP FITTING HOLES WITH A DIAMETER COMPRISED BETWEEN 7.14 mm (0.281 in) AND 7.24 mm (0.285 in) AND APPLY MATERIAL No 04CMA2

04 BETWEEN THE STOP FITTING AND THE FRAME WEB APPLY MATERIAL No 06AAC1 AND PERFORM SEALANT FILLET AROUND THE STOPS WITH MATERIAL No 06AAB1

05 WET INSTALL FASTENERS WITH MATERIAL No 06AAC1

06 APPLY MATERIAL No 04QAB2 AND MATERIAL No 12ADB1

07 SLEEVE ORIENTATION

POSITION OF SPLIT IN EXPANSION SLEEVE DURING COLD EXPANSION

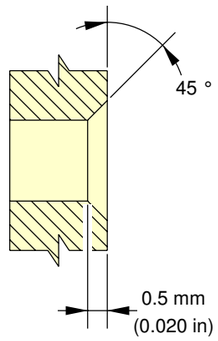

B - B

N_SB_531290_0_BAAA_02_03

Figure A-SBAAA - Sheet 02
Modification of the holes in frame web and stop fittings

Printed in FRANCE © AIRBUS S.A.S. 2007. All rights reserved.

This Page Intentionally Left Blank

Printed in FRANCE © AIRBUS S.A.S. 2007. All rights reserved.

**CONF ALL

For an explanation of the manhours and elapsed time, refer to the following Gantt Chart.

Printed in FRANCE © AIRBUS S.A.S. 2007. All rights reserved.

**CONF ALL

ELAPSED TIME ASSUMPTION SERVICE BULLETIN No A320-53-1290 01 02

STEPS	MH	PER	ET/S
GET ACCESS	3.00	2	1.50
REMOVE THE STOP FITTINGS ON LH SIDE	1.50	1	1.50
REMOVE THE STOP FITTINGS ON RH SIDE	1.50	1	1.50
ROTOTEST IN FRAME WEB HOLES ON LH SIDE	1.00	1	1.00
ROTOTEST IN FRAME WEB HOLES ON RH SIDE	1.00	1	1.00
COLD WORKING PROCESS IN FRAME WEB HOLES ON LH SIDE	3.00	1	3.00
COLD WORKING PROCESS IN FRAME WEB HOLES ON RH SIDE	3.00	1	3.00
OVERSIZE THE STOP FITTING HOLES ON LH SIDE	1.50	1	1.50
OVERSIZE THE STOP FITTING HOLES ON RH SIDE	1.50	1	1.50
RE-IDENTIFY THE STOP FITTINGS ON LH SIDE	0.50	1	0.50
RE-IDENTIFY THE STOP FITTINGS ON RH SIDE	0.50	1	0.50
INSTALL THE STOP FITTINGS ON LH SIDE	3.00	1	3.00
INSTALL THE STOP FITTINGS ON RH SIDE	3.00	1	3.00
TEST	1.00	2	0.50
CLOSE-UP	3.00	2	1.50

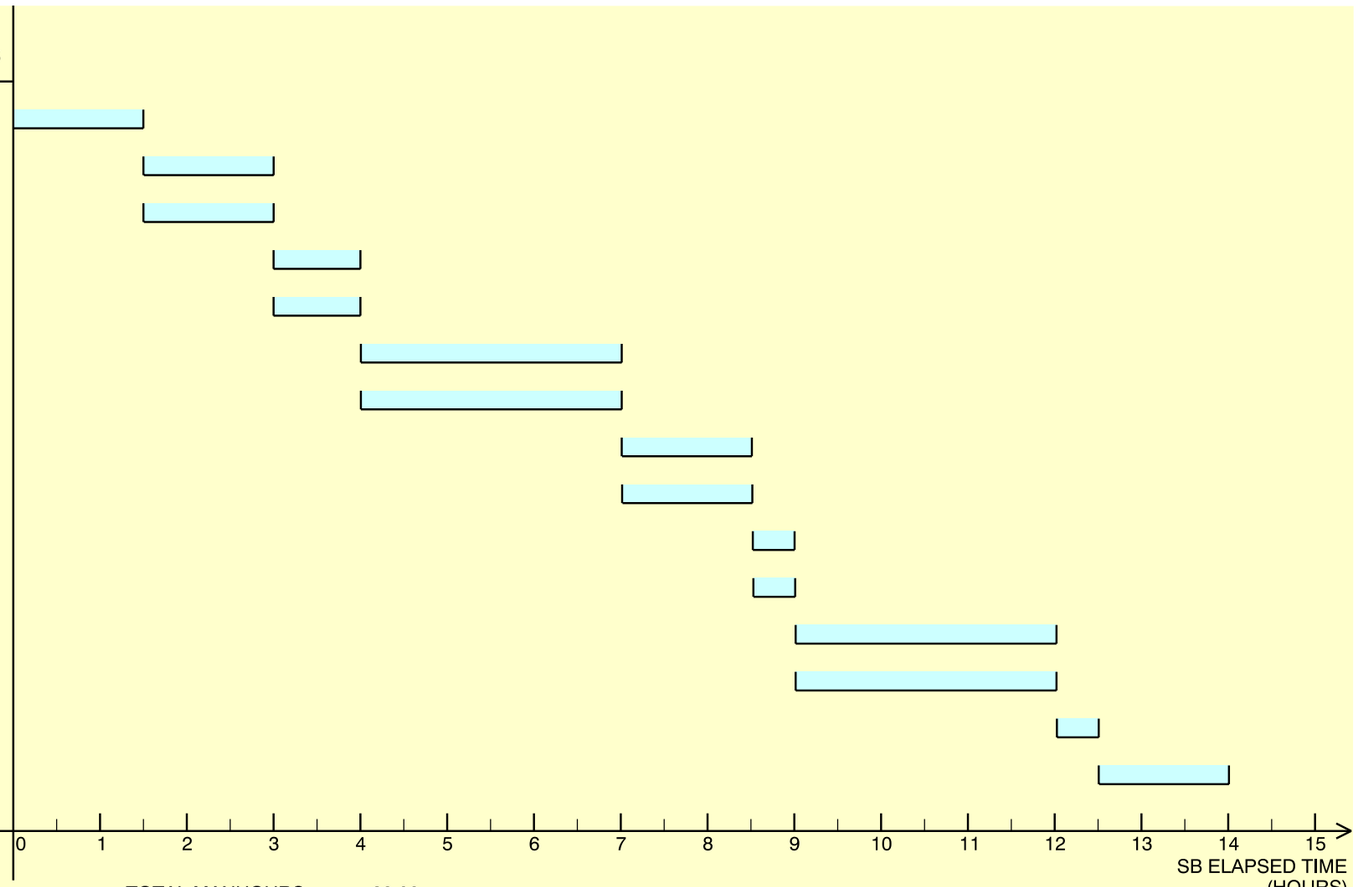

TOTAL MANHOURS 28.00
SB ELAPSED TIME 14.00

NOTE:

01 THIS CHART IS ONLY A PROPOSAL.
OPERATORS MAY DETERMINE THAT ANOTHER WAY
TO DO THE WORK IS MORE SUITABLE FOR THEM.

02 IF A VSB IS INVOLVED, THE ASSOCIATED MANHOURS
ARE NOT REFLECTED IN THIS GANTT CHART.

MH : MANHOURS
PER: NUMBER OF PERSONS
ET/S: ELAPSED TIME PER STEP

N_SB_531290_0_AAAA_01_02

Figure A-SAAAA - Sheet 01
Gantt Chart

Printed in FRANCE © AIRBUS S.A.S. 2007. All rights reserved.

SERVICE BULLETIN
REPORTING SHEET

TITLE: FUSELAGE - MAIN STRUCTURE - INTRODUCE COLD WORKING AT STOP FITTING FR66 / FR68

MODIFICATION No.: 156085G0974

Please complete the appropriate item (A or B):
A - SB WILL BE embodied YES/NO (if NO please comment)
If YES, aircraft concerned (as per SB effectivity by default) and planned dates (month/year) of embodiment:

B - SB HAS BEEN embodied on aircraft:

Operator comments:

From Airline:
Name/Title:
Signature: Date:

If operational documentation is affected (see Paragraph 1.K of this SB): If information is needed prior to next normal revision or prior to SB embodiment, please indicate required service(s):
Either: Modification Operational Impact (MOI), if available YES/NO
Or : Intermediate revision YES/NO

Important Information: This SB will only be incorporated in your maintenance and operational documentation if this sheet is returned to Airbus and signed by a duly authorised representative. With the next feasible revision, this will result in

- Updating of maintenance documentation to show pre and post SB data.
- Updating of maintenance and operational documentation to show post SB data after embodiment.

If this SB requires previous or simultaneous accomplishment of other SBs, Airbus shall automatically include them in the manual revisions. Refer to SIL 00-037 for detailed information.

Please return this completed sheet to:

AIRBUS
CUSTOMER SERVICES DIRECTORATE
1 Rond Point Maurice Bellonte
31707 BLAGNAC CEDEX FRANCE

Attn: SDC32 Technical Data and Documentation Services
FAX: (+33) 5 61 93 28 06
e-mail: sb.reporting@airbus.com
or via your Resident Customer Support Office.

Alternatively, SB lists via letters or fax are also accepted.

Printed in FRANCE © AIRBUS S.A.S. 2007. All rights reserved.

SERVICE BULLETIN
QUALITY PERCEPTION FORM

Use this form to tell us what is your perception of the quality of this Service Bulletin. The reported data that you provide us will be used to analyse areas of difficulties and to take corrective action to further improve the quality of our Service Bulletins.
We thank you for the time you have taken in completing this form.

(Please rate on a scale of 1 to 4, with 4 being the highest score)

- Quality rating of this SB	4	3	2	1
- Quality rating of the Accomplishment Instructions	4	3	2	1
- Quality rating of the Illustrations	4	3	2	1
- Is this SB easy to understand ?	Y / N			

If you have had difficulties in the accomplishment of this SB please quote below the area(s) and give a short description of the issue.

	Planning		Material		Instructions
X	Effectivity	X	Kit content	X	Preparation
X	Reason	X	List of Materials Operator Supplied	X	Mod/Inspection
X	Manpower	X	Industry support	X	Test
X	References	X	Re-identification	X	Close-Up
X	Publication	X	Tooling	X	Illustrations

Comments:

Operator: Date:

Name/Title:

Please return this form to:

AIRBUS
CUSTOMER SERVICES DIRECTORATE
1 Rond Point Maurice Bellonte
31707 BLAGNAC CEDEX FRANCE

Attn : SEM4 Service Bulletins Management
FAX : (33) 5 61 93 42 51

Or via your Resident Customer Support Office.

Printed in FRANCE © AIRBUS S.A.S. 2007. All rights reserved.